(Please scan this QR Code to view the Draft Red Herring Prospectus & Draft Abridged Prospectus)

DRAFT RED HERRING PROSPECTUS
Dated: July 10, 2026
100% Book Built Issue

(This Draft Red Herring Prospectus will be updated upon filing with the ROC)
Please read Section 26 and 32 of the Companies Act, 2013

SHREE SIDDHIVINAYAK GREENTECH INDUSTRIES LIMITED

(Formerly known as Shree Siddhivinayak Greentech Industries Private Limited)

CIN: U10720MH2022PLC385368

REGISTERED & CORPORATE OFFICE	CONTACT PERSON	CONTACT DETAILS	WEBSITE
Block Number 1 and 4, Floor No-1 and 2 Survey No 120, Plot No 4 & C.T.S. Number- 5343 Sambhaji Nagar Behind DIC, Osmanabad, Maharashtra, India, 413501	Pearl Santosh Dsouza (Company Secretary and Compliance Officer)	**T:** +91 86695 22424 **E:**info@shreesiddhivinayakgreentech.com	www.shreesiddhivinayakgreentech.com

PROMOTERS OF OUR COMPANY: MRS DIPALI DATTATRAYA KULKARNI AND MR. DATTATRAY KASHINATH KULKARNI

DETAILS OF THE ISSUE TO PUBLIC

TYPE	FRESH ISSUE	OFFER FOR SALE (OFS)	TOTAL ISSUE SIZE	ELIGIBILITY CRITERIA & SHARE RESERVATION
Fresh Issue	65,96,000 Equity Shares aggregating upto ₹ [●] Lakhs	Not Applicable	65,96,000 Equity Shares at the Issue Price of ₹[●] each aggregating to ₹[●] Lakhs	The Issue is being made pursuant to Regulation 229 (2), 253 (1) and 253 (2) of the Securities and Exchange Board of India (Issue of Capital and Disclosure Requirements) Regulations 2018, as amended ("SEBI (ICDR) Regulations, 2018"). *For details in relation to share reservation among Qualified Institutional Buyers, Non-Institutional Investors and Individual Investors see Chapter title "Issue Structure" beginning on page no. 323 of this Draft Red Herring Prospectus.*

RISKS IN RELATION TO THE FIRST ISSUE

This being the first public issue of our Company, there has been no formal market for the Equity Shares. The face value of the Equity Shares is ₹10/- (Rupees Ten Only) each. The Price band and the Issue Price determined and justified by our Company in consultation with the Book Running Lead Manager is stated in the Chapter titled "***Basis for Issue Price***" beginning on page no. 107 of this Draft Red Herring Prospectus and should not be considered to be indicative of the market price of the Equity Shares after the Equity Shares are listed. No assurance can be given regarding an active and/or sustained trading in the Equity Shares nor regarding the price at which the Equity Shares will be traded after listing.

GENERAL RISK

Investments in equity and equity-related securities involve a degree of risk and investors should not invest any funds in the Issue unless they can afford to take the risk of losing their investment. Investors are advised to read the risk factors carefully before taking an investment decision in the Issue. For taking an investment decision, investors must rely on their own examination of our Company and the Issue, including the risks involved. The Equity Shares in the Issue have not been recommended or approved by the Securities and Exchange Board of India ("SEBI"), nor does SEBI guarantee the accuracy or adequacy of the contents of this Draft Red Herring Prospectus. Specific attention of the investors is invited to the Section titled "***Risk Factors***" beginning on page no. 22 of this Draft Red Herring Prospectus.

ISSUER'S ABSOLUTE RESPONSIBILITY

Our Company, having made all reasonable inquiries, accepts responsibility for and confirms that this Draft Red Herring Prospectus contains all information with regard to the issuer and the issue, which is material in the context of the issue, that the information contained in this Draft Red Herring Prospectus is true and correct in all material aspects and is not misleading in any material respect, that the opinions and intentions expressed herein are honestly held and that there are no other facts, the omission of which make this Draft Red Herring Prospectus as a whole or any of such information or the expression of such opinions or intentions misleading in any material respect.

LISTING

The Equity Shares issued through the Draft Red Herring Prospectus are proposed to be listed on the SME Platform of the National Stock Exchange of India Limited ('NSE EMERGE'). In terms of the Chapter IX of the SEBI (ICDR) Regulations, 2018 as amended from time to time. Our Company has received in-principal approval letter dated [●] from NSE EMERGE for using its name in this Issue document for listing our shares on its platform. For the purpose of this Issue, the Designated Stock Exchange shall be National Stock Exchange of India Limited.

BOOK RUNNING LEAD MANAGER	REGISTRAR TO THE ISSUE
ERUDORE CAPITAL PRIVATE LIMITED **CIN:** U64990MH2024PTC430828 **Address:** Office No. 304, Third Floor, Morya Grand, Veera Desai Industrial Estate Road, Andheri West, Andheri, Mumbai, Maharashtra, India, 400053 **Contact Person:** Payal Saurabh Parikh **Contact Number:** +91 74001 76215 **E-mail:** info@erudorecapital.com **Investor Grievance E-mail:** investor@erudorecapital.com **Website:** www.erudorecapital.com **SEBI Registration Number:** INM000013280	**MAS SERVICES LIMITED** **CIN:** U74899DL1973PLC006950 **Address:** T-34, 2nd Floor, Okhla Industrial Area, Phase-II, New Delhi, India, 110020 **Contact Person:** N.C. Pal **Contact Number:** 011-26387281 **E-mail:** ipo@masserv.com **Investor Grievance E-Mail:** investor@masserv.com **Website:** www.masserv.com **SEBI Registration No.:** INR000000049

BID/ISSUE PROGRAMME

ANCHOR INVESTOR ISSUE OPENS/CLOSES ON[(1)]:[●]	BID/ISSUE OPENS ON[(1)]:[●]	BID/ISSUE CLOSES ON[(2)] : [●][(3)]

[(1)]Our Company, in consultation with the Book Running Lead Managers, may consider participation by Anchor Investors in accordance with the SEBI (ICDR) Regulations, 2018. The Anchor Investor Bid/Issue Period shall be one Working Day prior to the Bid/Issue Opening Date.

[(2)] Our Company, in consultation with the Book Running Lead Managers, may consider closing the Bid/Issue Period for QIBs one Working Day prior to the Bid/Issue Closing Date in accordance with the SEBI (ICDR) Regulations, 2018.

[(3)]UPI mandate end time and date shall be at 5.00 p.m. on the Bid/Issue Closing Date.

THIS PAGE HAS BEEN INTENTIONALLY LEFT BLANK

(Please scan this QR Code to view the Draft Red Herring Prospectus & Draft Abridged Prospectus)

DRAFT RED HERRING PROSPECTUS
Dated: July 10, 2026
100% Book Built Issue

(This Draft Red Herring Prospectus will be updated upon filing with the ROC)
Please read Section 26 and 32 of the Companies Act, 2013

SHREE SIDDHIVINAYAK GREENTECH INDUSTRIES LIMITED

(Formerly known as Shree Siddhivinayak Greentech Industries Private Limited)
CIN: U10720MH2022PLC385368

Our Company was originally incorporated on June 24, 2022, as "Shree Siddhivinayak Greentech Industries Private Limited", a Private Limited Company under the provisions of the Companies Act, 2013, vide Certificate of Incorporation dated June 25, 2022, issued by the Registrar of Companies, Central Processing Centre. Subsequently, our Company was converted from a Private Limited Company to a Public Limited Company pursuant to a special resolution passed by the shareholders at the Extraordinary General Meeting held on January 30, 2026. The name of our Company was consequently changed to "Shree Siddhivinayak Greentech Industries Limited", and a fresh Certificate of Incorporation was issued by the Registrar of Companies, Central Processing Centre, on March 27, 2026. *For details with respect to change in the registered office of our Company, refer to chapter titled "Our History and Certain Corporate Matters" on beginning page no. 194 of this Draft Red Herring Prospectus.*

Registered Office & Corporate Office: Block Number 1 and 4, Floor No-1 and 2 Survey No 120, Plot No 4 & C.T.S. Number- 5343 Sambhaji Nagar Behind DIC, Osmanabad, Maharashtra, India, 413501
Contact Person: Pearl Santosh Dsouza, Company Secretary and Compliance Officer
Contact Number: +91 8669522424 **E-mail:** info@shreesiddhivinayakgreentech.com **Website:** www.shreesiddhivinayakgreentech.com

PROMOTERS OF OUR COMPANY ARE MRS. DIPALI DATTATRAYA KULKARNI AND MR. DATTATRAY KASHINATH KULKARNI

THE ISSUE

INITIAL PUBLIC ISSUE OF 65,96,000 EQUITY SHARES OF FACE VALUE OF ₹ 10.00/- EACH ("EQUITY SHARES") OF SHREE SIDDHIVINAYAK GREENTECH INDUSTRIES LIMITED (THE "COMPANY" OR THE "ISSUER") FOR CASH AT A PRICE OF ₹ [●] PER EQUITY SHARE (INCLUDING A PREMIUM OF ₹ [●] PER EQUITY SHARE) (THE "ISSUE PRICE"), AGGREGATING TO ₹ [●] LAKHS (THE "ISSUE"), OF WHICH [●] EQUITY SHARES AGGREGATING TO ₹ [●] LAKHS WILL BE RESERVED FOR SUBSCRIPTION BY MARKET MAKER (THE "MARKET MAKER RESERVATION PORTION"). THE ISSUE LESS THE MARKET MAKER RESERVATION PORTION I.E. ISSUE OF [●] EQUITY SHARES OF FACE VALUE OF ₹ 10.00/- EACH AT AN ISSUE PRICE OF ₹ [●] PER EQUITY SHARE AGGREGATING TO ₹ [●] LAKHS IS HEREIN AFTER REFERRED TO AS THE "NET ISSUE". THE ISSUE AND THE NET ISSUE WILL CONSTITUTE [●]% AND [●]% RESPECTIVELY OF THE POST-ISSUE PAID UP EQUITY SHARE CAPITAL OF OUR COMPANY. FOR FURTHER DETAILS, *PLEASE REFER TO CHAPTER TITLED "TERMS OF THE ISSUE" BEGINNING ON PAGE NO. 313 OF THE DRAFT RED HERRING PROSPECTUS.*

THE PRICE BAND WILL BE DECIDED BY OUR COMPANY IN CONSULTATION WITH THE BOOK RUNNING LEAD MANAGER AND WILL BE ADVERTISED IN ALL EDITION OF FINANCIAL EXPRESS (A WIDELY CIRCULATED ENGLISH NATIONAL DAILY NEWSPAPER) AND ALL EDITION OF JANSATTA (A WIDELY CIRCULATED HINDI NATIONAL DAILY NEWSPAPER, AND MARATHI EDITION OF MUMBAI LAKSHADEEP (A WIDELY CIRCULATED REGIONAL LANGUAGE DAILY NEWSPAPER) (MARATHI BEING THE REGIONAL LANGUAGE OF MAHARASHTRA WHERE OUR REGISTERED OFFICE IS LOCATED), ATLEAST TWO WORKING DAYS PRIOR TO BID/ ISSUE OPENING DATE AND SHALL BE MADE AVAILABLE TO NSE EMERGE FOR THE PURPOSE OF UPLOADING ON THEIR WEBSITE, IN ACCORDANCE WITH SEBI (ICDR) REGULATIONS, 2018, AS AMENDED FROM TIME TO TIME.

In case of any revision in the Price Band, the Bid/Issue Period shall be extended for at least three additional Working Days after such revision of the Price Band, subject to the total Bid/Issue Period not exceeding 10 Working Days. In cases of force majeure, banking strike or similar unforeseen circumstances, our Company may, in consultation with the Book Running Lead Manager, for reasons to be recorded in writing extend the Bid/Issue Period for a minimum of one Working Days, subject to the Bid/Issue Period not exceeding 10 Working Days. Any revision in the Price Band and/or the revised Bid/Issue Period, if applicable, shall be widely disseminated by notification to the Stock Exchanges by issuing a public notice and also by indicating the change on the website of the Book Running Lead Manager and at the terminals of the Syndicate Members and by intimation to Designated Intermediaries and Sponsor Bank as applicable.

This issue is being made through Book Building process, in terms of Rule 19(2)(b) of the Securities Contracts (Regulation) Rules, 1957, as amended (the "SCRR") read with Regulation 252 of SEBI (ICDR) Regulations, 2018, the Issue is being made for at least 25% of the post-Issue paid-up Equity Share capital of our Company. The Issue is being made under Regulation 229(2) of Chapter IX of SEBI (ICDR) Regulations, 2018 via Book Building Issue method, in terms of Regulation 253(1)&(2) of Chapter IX of SEBI (ICDR) Regulations, 2018, wherein not more than 50% of the Net Issue shall be allocated on a proportionate basis to QIBs, provided that our Company may, in consultation with the Book Running Lead Manager, allocate up to 60% of the QIB Portion to Anchor Investors on a discretionary basis in accordance with the SEBI (ICDR) Regulations, 2018, of which 40% of the Anchor Investor Portion shall be reserved as: 33.33% for domestic Mutual Funds and 6.67% for Life Insurance Companies and Pension Funds, subject to valid Bids being received at or above the Anchor Investors Allocation Price. In the event of under-subscription or non-allocation in the Anchor Investor Portion, the balance Equity Shares shall be added to the QIB Portion. Further, 5% of the QIB Portion (excluding the Anchor Investor Portion) shall be available for allocation on a proportionate basis to Mutual Funds and the remainder of the QIB Portion shall be available for allocation on a proportionate basis to all QIBs (other than Anchor Investors), including Mutual Funds, subject to valid Bids being received at or above the Issue Price. Further, not less than 35% of the Net Issue shall be available for allocation to Individual Bidders who applies for minimum application size and Not less than 15% of the Net Issue shall be available for allocation to Non-Institutional Investors of which one-third of the Non-Institutional Portion will be available for allocation to Bidders with an application size of more than two lots and up to such lots as equivalent to not more than ₹ 10.00 Lakhs and two-thirds of the Non-Institutional Portion will be available for allocation to Bidders with an application size of more than ₹ 10.00 Lakhs and undersubscription in either of these two sub-categories of Non-Institutional Portion may be allocated to Bidders in the other sub-category of Non-Institutional Portion. Subject to the availability of Equity Shares in the Non – Institutional Investors Category, the allotment to each Non-Institutional Investors shall not be less than the minimum application size in Non-Institutional Category and the remaining available Equity Shares, if any, shall be allocated on a proportionate basis in accordance with the conditions specified in this regard in Schedule XIII of the SEBI (ICDR) Regulations, 2018. Subject to valid Bids being received at or above the Issue Price, undersubscription, if any, in any category, except the QIB Portion, would be allowed to be met with spill-over from any other category or a combination of categories of Bidders at the discretion of our Company in consultation with the BRLM and the Designated Stock Exchange. However, under-subscription, if any, in the QIB Portion will not be allowed to be met with spillover from other category or a combination of categories.

All potential bidders, other than Anchor Investors, shall participate in the Issue only through an Application Supported by Blocked Amount ("ASBA") process including through UPI mode (as applicable) by providing details of the respective bank accounts and / or UPI IDs, in case of Individual Investors and Non-Institutional Bidders with an application size of up to ₹5.00 lakhs, if applicable, which will be blocked by the Self-Certified Syndicate Banks ("SCSBs") for the same. For details in this regard, specific attention is invited to the chapter titled '*Issue Procedure*' beginning on page no.328 of the Draft Red Herring Prospectus dated July 10, 2026. A copy of the Red Herring Prospectus will be filed with the Registrar of Companies as required under Sections 26 & 32 of the Companies Act, 2013.

THE FACE VALUE OF THE EQUITY SHARES IS ₹ 10.00/- EACH AND THE ISSUE PRICE OF ₹ [●], WHICH IS [●] TIMES OF THE FACE VALUE

RISK IN RELATION TO THE FIRST ISSUE

This being the first public issue of our Company, there has been no formal market for the Equity Shares. The face value of the Equity Shares is ₹10/- (Rupees Ten Only) each. The Price band and the Issue Price determined and justified by our Company in consultation with the Book Running Lead Manager is stated in the Chapter titled **"*Basis for Issue Price*"** beginning on page no.107 of this Draft Red Herring Prospectus and should not be considered to be indicative of the market price of the Equity Shares after the Equity Shares are listed. No assurance can be given regarding an active and/or sustained trading in the Equity Shares nor regarding the price at which the Equity Shares will be traded after listing.

GENERAL RISKS

Investments in equity and equity-related securities involve a degree of risk and investors should not invest any funds in the Issue unless they can afford to take the risk of losing their investment. Investors are advised to read the risk factors carefully before taking an investment decision in the Issue. For taking an investment decision, investors must rely on their own examination of our Company and the Issue, including the risks involved. The Equity Shares in the Issue have not been recommended or approved by the Securities and Exchange Board of India ("SEBI"), nor does SEBI guarantee the accuracy or adequacy of the contents of this Draft Red Herring Prospectus. Specific attention of the investors is invited to the Section titled ***"Risk Factors"*** beginning on page no. 22 of this Draft Red Herring Prospectus.

ISSUER'S ABSOLUTE RESPONSIBILITY

Our Company, having made all reasonable inquiries, accepts responsibility for and confirms that this Draft Red Herring Prospectus contains all information with regard to the issuer and the issue, which is material in the context of the issue, that the information contained in this Draft Red Herring Prospectus is true and correct in all material aspects and is not misleading in any material respect, that the opinions and intentions expressed herein are honestly held and that there are no other facts, the omission of which make this Draft Red Herring Prospectus as a whole or any of such information or the expression of such opinions or intentions misleading in any material respect.

LISTING

The Equity Shares issued through the Draft Red Herring Prospectus are proposed to be listed on the SME Platform of the National Stock Exchange of India Limited ('NSE EMERGE'). In terms of the Chapter IX of the SEBI (ICDR) Regulations, 2018 as amended from time to time. Our Company has received in-principal approval letter dated [●] from NSE EMERGE for using its name in this Issue document for listing our shares on its platform. For the purpose of this Issue, the Designated Stock Exchange shall be National Stock Exchange of India Limited.

BOOK RUNNING LEAD MANAGER TO THE ISSUE	REGISTRAR TO THE ISSUE
ERUDORE CAPITAL PRIVATE LIMITED **CIN:** U64990MH2024PTC430828 **Address:** Office No. 304, Third Floor, Morya Grand, Veera Desai Industrial Estate Road, Andheri West, Andheri, Mumbai, Maharashtra, India, 400053 **Contact Person:** Payal Saurabh Parikh **Contact Number:** +91 74001 76215 **E-mail:** info@erudorecapital.com **Investor Grievance E-mail:** investor@erudorecapital.com **Website:** www.erudorecapital.com **SEBI Registration Number:** INM000013280	**MAS SERVICES LIMITED** **CIN:** U74899DL1973PLC006950 **Address:** T-34, 2nd Floor, Okhla Industrial Area, Phase-II, New Delhi-110020 **Contact Person:** N.C. Pal **Contact Number:** 011-26387281 **E-mail:** ipo@masserv.com **Investor Grievance E-Mail:** investor@masserv.com **Website:** www.masserv.com **SEBI Registration No.:** INR000000049

BID/ISSUE PROGRAMME

ANCHOR INVESTOR ISSUE OPENS/CLOSES ON[1]:[●]	BID/ISSUE OPENS ON[1]:[●]	BID/ISSUE CLOSES ON[2]: [●][3]

[1] Our Company, in consultation with the Book Running Lead Managers, may consider participation by Anchor Investors in accordance with the SEBI (ICDR) Regulations, 2018. The Anchor Investor Bid/Issue Period shall be one Working Day prior to the Bid/Issue Opening Date.

[2] Our Company, in consultation with the Book Running Lead Managers, may consider closing the Bid/Issue Period for QIBs one Working Day prior to the Bid/Issue Closing Date in accordance with the SEBI (ICDR) Regulations, 2018.

[3] UPI mandate end time and date shall be at 5.00 p.m. on the Bid/Issue Closing Date.

TABLE OF CONTENTS

SECTION I: GENERAL **1**
DEFINITIONS AND ABBREVIATIONS 1
CERTAIN CONVENTIONS, USE OF FINANCIAL INFORMATION AND MARKET DATA AND CURRENCY OF PRESENTATION 19
FORWARD-LOOKING STATEMENTS 21
SECTION II: RISK FACTORS **22**
SECTION III: INTRODUCTION **62**
THE ISSUE 62
SUMMARY OF RESTATED FINANCIAL STATEMENTS 64
SUMMARY OF CONTINGENT LIABILITIES 67
SUMMARY OF RELATED PARTY TRANSACTIONS 68
GENERAL INFORMATION 69
CAPITAL STRUCTURE 78
SECTION IV: PARTICULARS OF THE ISSUE **95**
OBJECTS OF THE ISSUE 95
BASIS FOR ISSUE PRICE 107
STATEMENT ON SPECIAL TAX BENEFITS 117
SECTION V: ABOUT THE COMPANY AND INDUSTRY **119**
INDUSTRY OVERVIEW 119
OUR BUSINESS 147
KEY REGULATIONS AND POLICIES IN INDIA 183
OUR HISTORY AND CERTAIN CORPORATE MATTERS 194
OUR MANAGEMENT 200
OUR PROMOTER AND PROMOTER GROUP 217
OUR GROUP COMPANIES 224
DIVIDEND POLICY 226
SECTION VI: FINANCIAL INFORMATION **227**
RESTATED FINANCIAL STATEMENTS 227
OTHER FINANCIAL INFORMATION 263
RELATED PARTY TRANSACTIONS 264
MANAGEMENT'S DISCUSSION AND ANALYSIS OF FINANCIAL POSITION AND RESULTS OF OPERATIONS 265
CAPITALISATION STATEMENT 280
FINANCIAL INDEBTEDNESS 281
SECTION VII: LEGAL AND OTHER INFORMATION **283**
OUTSTANDING LITIGATION AND MATERIAL DEVELOPMENT 283
GOVERNMENT AND OTHER APPROVALS 293
OTHER REGULATORY AND STATUTORY DISCLOSURES 300
SECTION VIII: ISSUE RELATED INFORMATION **313**
TERMS OF THE ISSUE 313
ISSUE STRUCTURE 323
ISSUE PROCEDURE 328
RESTRITION ON FOREIGN OWENRSHIP OF INDIAN SECURITIES 373
SECTION IX: MAIN PROVISIONS OF THE ARTICLES OF ASSOCIATION **375**
SECTION X: OTHER INFORMATION **408**
MATERIAL CONTRACTS AND DOCUMENTS FOR INSPECTION 408
DECLARATION 410

SECTION I: GENERAL

DEFINITIONS AND ABBREVIATIONS

This Draft Red Herring Prospectus uses certain definitions and abbreviations which, unless the context otherwise indicates or implies or unless otherwise specified, shall have the meaning as provided below. References to any legislation, act, regulations, rules, guidelines or policies shall be to such legislation, act, regulations, rules, guidelines or policies as amended, supplemented, or re-enacted from time to time and any reference to a statutory provision shall include any subordinate legislation made from time to time under that provision.

The words and expressions used in this Draft Red Herring Prospectus, but not defined herein shall have, to the extent applicable, the meaning ascribed to such terms under SEBI ICDR Regulations, the Companies Act, the SCRA, the Depositories Act, and the rules and regulations made thereunder. Further, the Issue related terms used but not defined in this Draft Red Herring Prospectus shall have the meaning ascribed to such terms under the General Information Document. In case of any inconsistency between the definitions given below and the definitions contained in the General Information Document (as defined below), the definitions given below shall prevail.

Notwithstanding the foregoing, the terms not defined but used in the chapters titled "*Basis for Issue Price*", "*Statement on Special Tax Benefits*", "*Industry Overview*", "*Our History and Certain Corporate Matters*", "*Our Group Companies*", "*Restated Financial Statements*", "*Outstanding Litigations and Material Developments*", "*Key Industry Regulations and Policies*", "*Issue Procedure*" and section titled "*Main Provisions of the Articles of Association*" beginning on page 107, 117, 119, 194, 224, 227, 283, 183, 328 and 375 respectively of this Draft Red Herring Prospectus, shall have the meanings ascribed to such terms in the respective sections.

GENERAL AND COMPANY RELATED TERMS

Term	Description
Shree Siddhivinayak / The Company / Our Company / The Issuer/ Shree Siddhivinayak Greentech Industries Limited	Shree Siddhivinayak Greentech Industries Limited, a company incorporated under the Companies Act, 2013 having its registered office at Block Number 1 and 4 Floor No-1 and 2 Survey No 120, Plot No 4 & C.T.S. Number-5343 Sambhaji Nagar Behind DIC, Osmanabad, Maharashtra, India,413501
We / us / our	Unless the context otherwise indicates or implies, refers to our Company
you / your / yours	Prospective Bidders in this Issue

COMPANY RELATED TERMS

Term	Description
Articles/ Articles of Association/ AOA	Unless the context otherwise requires, refers to the Articles of Association of our Company, as amended from time to time.
Audit Committee	The Audit Committee of the Board of Directors constituted in accordance with Section 177 of the Companies Act, 2013. *For details refer chapter titled "Our Management" beginning on page number no. 200 of this Draft Red Herring Prospectus.*
Auditors / Statutory Auditors / Peer Review Auditors	The Statutory Auditors of our Company, currently being A.N. Gawade & Co LLP, Chartered Accountants, having their office at 7, Saraswathi Heights, behind Café Good-luck, Deccan Gymkhana, Pune, Maharashtra – 411004
Bankers to our company	HDFC Bank Limited, Dombivli Nagari Sahakari Bank Limited, Shree Siddhivinayak District Co-op Credit Society Limited and Shree Siddhivinayak Multistate Co-op Credit Society Limited
Board of Directors / Board / BOD / Our Board	The Board of Directors of our Company, including all duly constituted Committees thereof as the context may refer to
Chairman / Chairperson	Our Company does not have a Formal Chairman / Chairperson
Chief Financial Officer / CFO	The Chief Financial Officer of our Company is Mr. Dattatray Kashinath Kulkarni
Committee(s)	Duly constituted committee(s) of our Board of Directors
Company Secretary and Compliance Officer	The Company Secretary and Compliance Officer of our Company is Pearl Santosh Dsouza
Corporate Identification Number / CIN	U10720MH2022PLC385368
DIN	Director Identification Number

Term	Description
Equity Shareholders / Shareholders	Persons / entities holding Equity Share of our Company
Equity Shares	Equity Shares of our Company of Face Value of ₹ 10/- each fully paid-up
Executive Directors	Executive Directors are the Managing Director & Whole Time Directors of our Company. For details, see chapter titled "*Our Management*" beginning on page no. 200 of this Draft Red Herring Prospectus
Group Companies	In terms of SEBI ICDR Regulations, the term "Group Companies" includes companies (other than our Promoters and Subsidiaries) with which there were related party transactions as disclosed in the Restated Financial Statements as covered under the applicable accounting standards, any other companies as considered material by our Board, in accordance with the Materiality Policy and as disclosed in chapter titled "*Our Group Companies*" beginning on page no. 224 of this Draft Red Herring Prospectus
Independent Director(s)	Independent Directors on the Board, and eligible to be appointed as an Independent Director under the provisions of Companies Act and SEBI LODR Regulations. *For details of the Independent Directors, please refer to chapter titled "Our Management" beginning on page no. 200 of this Draft Red Herring Prospectus*
ISIN	International Securities Identification Number. In this case being INE1NVJ01026.
Key Managerial Personnel / KMP	Key Managerial Personnel of our Company in terms of Regulation 2(1)(bb) of the SEBI ICDR Regulations, together with the Key Managerial Personnel of our Company in terms of Section 2(51) of the Companies Act, 2013 and as disclosed in the chapter titled "*Our Management*" beginning on page no. 200 of this Draft Red Herring Prospectus
KPI	Key Performance Indicator, are numerical measures of the issuer company's historical financial or operational performance and financial or operational positions
KPI circular	SEBI Circular No. SEBI/HO/CFD/CFD-PoD-2/P/CIR/2025/28 dated February 28, 2025, issued by the Securities and Exchange Board of India ('SEBI') titled "Industry Standards on Key Performance Indicators ("KPIs") Disclosures in the Draft Issue Document."
Managing Director	The Managing Director of our Company being Mrs. Dipali Dattatray Kulkarni
Materiality Policy	The policy adopted by our Board on June 01, 2026 for identification of Group Companies, material outstanding litigation and outstanding dues to material creditors, in accordance with the disclosure requirements under the SEBI ICDR Regulations
MOA / Memorandum / Memorandum of Association	The Memorandum of Association of our Company, as amended from time to time
Nomination and Remuneration Committee	The Nomination and Remuneration Committee of our Company, constituted in accordance with Section 178 of the Companies Act, 2013. *For details refer chapter titled "Our Management" beginning on page no. 200 of this Draft Red Herring Prospectus.*
Non-Executive Director	A Director who is not an Executive Director and includes an Independent Director
Non-residents	A person resident outside India, as defined under FEMA
NRIs / Non-Resident Indians	A person resident outside India, as defined under FEMA and who is a citizen of India or a Person of Indian Origin under Foreign Outside India Regulations, 2000.
Promoter Group	Such persons, entities and companies constituting our promoter group pursuant to Regulation 2(1) (pp) of the SEBI ICDR Regulations as disclosed in the Chapter titled "*Our Promoters and Promoter Group*" beginning on page no. 217 of this Draft Red Herring Prospectus
Promoters	The Promoters of our Company are Mrs. Dipali Dattatray Kulkarni and Mr. Dattatray Kashinath Kulkarni
Registered Office	The Registered Office of our Company situated at Block Number 1 and 4 Floor No-1 and 2 Survey No 120, Plot No 4 & C.T.S. Number-5343Sambhaji Nagar Behind DIC, Osmanabad, Maharashtra, India, 413501
Registrar of Companies / RoC	Registrar of Companies, Nagpur situated at New Secretariat Building, 2nd Floor, East Wing, Civil Lines, Nagpur 440001

Term	Description
Restated Financial Statements	Restated Financial Statements of our Company for the financial years ended on March 31, 2026, March 31, 2025, and March 31, 2024 {(prepared in accordance with the Indian GAAP read with Section 133 of the Companies Act, 2013 and restated in accordance with requirements of Section 26 of Part I of Chapter III of Companies Act 2013, as amended, the SEBI ICDR Regulations, as amended and the Guidance Note on "Reports in Company Prospectuses (Revised 2019)" issued by ICAI, as amended}) which comprises the restated summary Statement of Assets & Liabilities, the restated summary Statement of Profit and Loss, the restated summary Statement of Cash Flows and restated statement of change in equity along with all the schedules, annexures and notes thereto.
Senior Management	Senior Management of our Company in terms of Regulation 2(1)(bbbb) of the SEBI ICDR Regulations and as disclosed in the chapter titled "*Our Management*" beginning on page no. 200 of this Draft Red Herring Prospectus
Stakeholders' Relationship Committee	The Stakeholders' Relationship Committee of our Company, constituted in accordance with Section 178 of the Companies Act, 2013. *For details refer chapter titled "Our Management" beginning on page number 200 of this Draft Red Herring Prospectus.*

KEY PERFORMANCE INDICATORS

Key Performance Indicators	Basis
Cash Profit after tax (Profit after tax +dep)	Cash profit after tax is calculated as profit after tax plus depreciation.
Current Ratio	Current Ratio is calculated by dividing Current assets to Current Liabilities.
Debt	Debt is calculated as Long term borrowing plus Short term borrowing.
Debt-Equity Ratio	Debt to Equity ratio is calculated as Total Debt divided by shareholder equity (Net Worth).
EBITDA	EBITDA is calculated as Profit before tax + Depreciation + Interest Expense – Other Income.
EBITDA Margin	EBITDA Margin is calculated as EBITDA divided by Revenue from Operations.
Interest coverage ratio	Interest coverage ratio is calculated as Profit before tax plus interest expense divided by interest expense.
Inventory days	Inventory days is calculated as average inventory divided by Revenue from Operations multiplied by 365 for fiscal years.
Net Asset Value per share (in ₹)	Net Asset Value per share (in ₹) = Restated net worth at the end of the year / Number of Equity Shares at the end of the year.
Net Asset Value Per Share (In ₹) Adjusted	Net Asset Value Per Share (In ₹) Adjusted = Restated Net Worth at the end of the year / Weighted Average Number of Equity Shares (Adjusted for the Bonus Issue and Split shares).
Net fixed asset turnover ratio	Net fixed asset turnover ratio is calculated by dividing revenue from operations by the average of fixed assets.
Net worth	Net worth is calculated as share capital plus reserve and surplus.
Operating cash flow	Operating cash flow is cash flow from the operating line item in cash flow statement.
PAT	PAT means profit after taxes for respective year.
PAT Margin	PAT Margin is calculated as profit for the year divided by revenue from operations.
Profit after tax growth	Growth in PAT is calculated as percentage change in profit after tax over previous fiscal.
Return on Capital Employed	Return on Capital Employed is calculated as follows: Profit for the year plus finance cost plus tax expenses (EBIT) divided by (Net Worth plus Total Debt).
Return on Equity	Return on Equity is calculated by comparing profit for the year against the amount of average shareholder equity.
Revenue from Operations	Revenue from operation means revenue from operation as stated in the profit and loss.

Key Performance Indicators	Basis
Trade Payable days	Trade payable days is calculated as average trade payables divided by total purchases made during the year multiplied by 365 for fiscal years.
Trade Receivables days	Trade receivable days is calculated as average trade receivables divided by revenue from operations multiplied by 365 for fiscal years.
Year on year revenue growth	Growth in Revenue from Operations is calculated as percentage change in revenue from operations over previous fiscal.

ISSUE RELATED TERMS

Term	Description
Abridged Prospectus	Abridged Prospectus to be issued under SEBI (ICDR) Regulations and appended to the Bid cum Application Forms. Abridged Prospectus means a memorandum containing such salient features of a Prospectus as may be specified by SEBI in this behalf.
Acknowledgement Slip	The slip or document issued by the Designated Intermediary to a Bidder as proof of having accepted the Bid cum Application Forms.
Allot/ Allotment/ Allotment of Equity Shares	Unless the context otherwise requires, allotment of the Equity Shares pursuant to the Issue of the Equity Shares to the successful Bidders.
Allotment Advice	Note or advice or intimation of Allotment sent to the Bidders who have been allotted Equity Shares after the Basis of Allotment has been approved by the Designated Stock Exchange.
Allotment date	Date on which allotment is made
Allottee(s)	A successful Bidders (s) to whom the Equity Shares are being/have been issued/allotted.
Anchor Investor Allocation Price	The price at which Equity Shares will be allocated to the Anchor Investors in terms of the Red Herring Prospectus and the Prospectus, which will be decided by our Company in consultation with the Book Running Lead Manager during the Anchor Investor Bid/Issue Period.
Anchor Investor Application Form	The application form used by an Anchor Investor to make a Bid in the Anchor Investor Portion and which will be considered as an application for Allotment in terms of the Red Herring Prospectus and the Prospectus.
Anchor Investor Bid/ Issue Period	One Working Day prior to the Bid/ Issue Opening Date, on which Bids by Anchor Investors shall be submitted and allocation to the Anchor Investors shall be completed.
Anchor Investor Issue Price	The final price at which the Equity Shares will be Allotted to the Anchor Investors in terms of the Red Herring Prospectus and the Prospectus, which price will be equal to or higher than the Issue Price but not higher than the Cap Price. The Anchor Investor Issue Price will be decided by our Company, in consultation with the Book Running Lead Manager.
Anchor Investor Pay-in Date	With respect to Anchor Investor(s), it shall be the Anchor Investor Bidding Date, and in the event the Anchor Investor Allocation Price is lower than the Issue Price, not later than two Working Days after the Bid / Issue Closing Date.
Anchor Investor Portion	Up to 60% of the QIB Portion which may be allocated by our Company, in consultation with the Book Running Lead Manager, to the Anchor Investors on a discretionary basis in accordance with the SEBI ICDR Regulations. With effect from December 1, 2025, in accordance with the Securities and Exchange Board of India (Issue of Capital and Disclosure Requirements) (Third Amendment) Regulations, 2025, 40% of the Anchor Investor Portion shall be reserved for, (i) 33.33% shall be available for allocation to domestic Mutual Funds, and (ii) 6.67% for life insurance companies and pension funds, subject to valid Bids being received from domestic Mutual Funds, life insurance companies and pension funds at or above the Anchor Investor Allocation Price. In the event of under-subscription in (ii) above, the allocation may be made to domestic Mutual Funds.

Term	Description
	For the purpose of clause (ii), – (A) "life insurance company" means an entity registered with the Insurance Regulatory and Development Authority of India under the provisions of the Insurance Act, 1938; (B) "pension fund" means a fund registered with the Pension Fund Regulatory and Development Authority under the provisions of the Pension Fund Regulatory and Development Authority Act, 2013.
Anchor Investor(s)	Qualified Institutional Buyer, applying under the Anchor Investor Portion in accordance with the requirements specified in the SEBI ICDR Regulations and the Red Herring Prospectus and Prospectus and who has Bid for an amount of at lakhs least ₹200.00 lakhs.
Application Form	The Form in terms of which the applicant/ bidder shall apply for the Equity Shares of our Company.
Application Supported by Blocked Amount or ASBA	An application, whether physical or electronic, used by ASBA Bidders, to make a Bid and authorising an SCSB to block the Bid Amount in the ASBA Account and will include amounts blocked by the SCSB upon acceptance of UPI Mandate Request by the UPI Bidders using the UPI Mechanism.
ASBA Account	A bank account maintained by ASBA Bidders with an SCSB and specified in the ASBA Form submitted by such ASBA Bidder in which funds will be blocked by such SCSB to the extent of the amount specified in the ASBA Form submitted by such ASBA Bidder and includes a bank account maintained by a UPI Bidder linked to a UPI ID, which will be blocked by the SCSB upon acceptance of the UPI Mandate Request in relation to a Bid by a UPI Bidder.
ASBA Application Location(s) / Specified Cities	Such Branches of the SCSBs which shall collect the Bid cum Application Forms used by the Bidder applying through the ASBA process and a list of which is available on https://www.sebi.gov.in/sebiweb/other/OtherAction.do?doRecognisedFpi=yes&intmId=34 or at such other website as may be prescribed by SEBI from time to time.
ASBA Bid	A Bid made by an ASBA Bidder.
ASBA Bidder(s)	All Bidders except Anchor Investors.
ASBA Forms	An application form (with or without the use of UPI, as may be applicable), whether physical or electronic, used by ASBA Bidders, which will be considered as the application for Allotment in terms of this Draft Red Herring Prospectus.
Banker to the Issue	Bank which are clearing members and registered with SEBI as banker to an issue and with whom the Public Issue Account will be opened, in this case being [●].
Banker to the Issue Agreement/ Escrow Agreement/ Sponsor Bank Agreement	Agreement dated [●] entered into amongst our Company, Book Running Lead Manager, the Registrar and the Banker to the Issue for the collection of bid amount and where applicable, for remitting refunds, on the terms and conditions thereof.
Basis of Allotment	The basis on which the Equity Shares will be Allotted to successful Bidders under the Issue, as described in the Section titled, "*Issue Procedure*" beginning on page no. 328 of this Draft Red Herring Prospectus.
Bid	An indication to make an Issue during the Bid/Issue Period by an ASBA Bidder pursuant to submission of the ASBA Form to subscribe to or purchase the Equity Shares at a price within the Price Band, including all revisions and modifications thereto as permitted under the SEBI ICDR Regulations and in terms of the Red Herring Prospectus and the relevant Bid cum Application Form. The term "Bidding" shall be construed accordingly.
Bid Amount	The amount at which the bidder makes a bid for the Equity Shares of our Company in terms of Red Herring Prospectus.
Bid cum Application Form	The form in terms of which the Bidder shall make a bid, including ASBA Form, and which shall be considered as the bid for the Allotment pursuant to the terms of the Red Herring Prospectus.
Bid Lot	[●] Equity Shares and in multiples of [●] Equity Shares thereafter

Term	Description
Bid/ Issue Period	Except in relation to Anchor Investors, the period between the Bid/ Issue Opening Date and the Bid/ Issue Closing Date, inclusive of both days, during which prospective Bidders can submit their Bids, including any revisions thereof in accordance with the SEBI ICDR Regulations and the terms of the Red Herring Prospectus. Provided, however, that the Bidding shall be kept open for a minimum of three Working Days for all categories of Bidders. Our Company in consultation with the Book Running Lead Manager may consider closing the Bid/Issue Period for the QIB Portion One Working Day prior to the Bid/Issue Closing Date which shall also be notified in an advertisement in same newspapers in which the Bid/Issue Opening Date was published, in accordance with the SEBI ICDR Regulations. In cases of force majeure, banking strike or similar circumstances, our Company in consultation with the BRLM, for reasons to be recorded in writing, extend the Bid / Issue Period for a minimum of three Working Days, subject to the Bid/ Issue Period not exceeding 10 Working Days.
Bid/Issue Closing Date	Except in relation to Anchor Investors, the date after which the Designated Intermediaries will not accept any Bids, being [●], which shall be published in All editions of Financial Express (a widely circulated English national daily newspaper), and All editions of Jansatta (a widely circulated Hindi national daily newspaper), and Marathi editions of Mumbai Lakshadeep (a widely circulated Regional language daily newspaper) (Marathi being the regional language of Maharashtra, where our Registered Office is located). Our Company in consultation with the BRLM, may, consider closing the Bid/Issue Period for QIBs one Working Day prior to the Bid/Issue Closing Date in accordance with the SEBI ICDR Regulations. In case of any revision, the extended Bid/ Issue Closing Date shall be widely disseminated by notification to the Stock Exchanges, and also be notified on the websites of the BRLM and at the terminals of the Syndicate Members, if any and communicated to the Designated Intermediaries and the Sponsor Bank, which shall also be notified in an advertisement in same newspapers in which the Bid/ Issue Opening Date was published, as required under the SEBI ICDR Regulations
Bid/Issue Opening Date	Except in relation to Anchor Investors, the date on which the Designated Intermediaries shall start accepting Bids, being [●], which shall be published in all editions of Financial Express (a widely circulated English national daily newspaper), and all editions of Jansatta (a widely circulated Hindi national daily newspaper) and Marathi editions of Mumbai Lakshadeep (a widely circulated Regional language daily newspaper) (Marathi being the regional language of Maharashtra, where our Registered Office is located).
Bidder/ Investor	Any prospective investor who makes a Bid pursuant to the terms of the Red Herring Prospectus and the Bid cum Application Form and unless otherwise stated or implied, includes an Anchor Investor.
Bidding Centers	Centres at which the Designated Intermediaries shall accept the ASBA Forms i.e., Designated SCSB Branch for SCSBs, Specified Locations for members of the Syndicate, Broker Centres for Registered Brokers, Designated RTA Locations for RTAs and Designated CDP Locations for CDPs.
Book Building Process	Book building process, as provided in Part A of Schedule XIII of the SEBI ICDR Regulations, in terms of which the Issue is being made.
BRLM / Book Running Lead Manager	Book Running Lead Manager to the Issue, in this case being Erudore Capital Private Limited, SEBI Registered Category I Merchant Banker.
Broker Centres	Broker centres notified by the Stock Exchanges where ASBA Bidders can submit the ASBA Forms to a Registered Broker. The details of such Broker Centres, along with the names and the contact details of the Registered Brokers are available on the website of the National Stock Exchange of India Limited (www.nseindia.com).

Term	Description
CAN or Confirmation of Allocation Note	A notice or intimation of allocation of the Equity Shares sent to Anchor Investors, who have been allocated Equity Shares, on or after the Anchor Investor Bid/ Issue Period. It is a note or advice or intimation sent to each successful bidder indicating the Equity which will be allotted, after approval of Basis of Allotment by the designated Stock Exchange.
Cap Price	Higher end of the Price Band, above which the Issue Price and the Anchor Investor Issue Price will not be finalised and above which no Bids will be accepted. The Cap Price shall be at least 105% of the Floor Price and less than or equal to 120% of the Floor Price.
Client ID	Client Identification Number maintained with one of the Depositories in relation to Demat Account.
Collecting Depository Participant or CDP	A depository participant as defined under the Depositories Act, 1996, registered with SEBI and who is eligible to procure Bids at the Designated CDP Locations in terms of circular no.GR/CFD/POLICYCELL/11/2015 dated November 10, 2015, issued by SEBI
Controlling Branches of SCSBs	Such branches of the SCSBs which co-ordinate Applications under this Issue made by the ASBA Bidder with the Book Running Lead Manager, the Registrar to the Issue and the Stock Exchanges, a list of which is provided on http://www.sebi.gov.in or at such other website as may be prescribed by SEBI from time to time.
Cut Off Price	The Issue Price, which shall be any price within the Price band as finalized by our Company in consultation with the BRLM.
Demographic Details	The demographic details of the Bidders such as their Address, PAN, Occupation and Bank Account details.
Depository Participant/DP	A depository participant as defined under the Depositories Act, 1996.
Depository/Depositories	A depository registered with SEBI under the SEBI (Depositories and Participant) Regulations, 1996, as amended from time to time, being NSDL and CDSL.
Designated CDP Locations	Such locations of the CDPs where Bidder can submit the ASBA Forms to Collecting Depository Participants. The details of such Designated CDP Locations, along with names and contact details of the Collecting Depository Participants eligible to accept ASBA Forms are available on the websites of the Stock Exchange i.e., www.nseindia.com
Designated Date	The date on which the funds are transferred by the Escrow Collection Bank from the Escrow Account(s) or the instructions are given to the SCSBs to unblock the ASBA Accounts including the accounts linked with UPI ID and transfer the amounts blocked by SCSBs as the case may be, to the Public Issue Account, as appropriate in terms of the Prospectus and the aforesaid transfer and instructions shall be issued only after finalization of the Basis of Allotment in consultation with the Designated Stock Exchange.
Designated Intermediaries	An SCSB with whom the bank account to be blocked, is maintained, a syndicate member (or sub-syndicate member), a Registered Broker, Designated CDP Locations for CDP, a registrar to an issue and share transfer agent (RTA) (whose names is mentioned on website of the stock exchange as eligible for this activity).
Designated RTA Locations	Such locations of the RTAs where ASBA Bidder can submit the Bid cum Application Forms to RTAs. The details of such Designated RTA Locations, along with names and contact details of the RTAs eligible to accept Bid cum Application Forms are available on the websites of the Stock Exchange i.e., www.nseindia.com
Designated SCSB Branches	Such branches of the SCSBs which shall collect the ASBA Form from the Bidder and a list of which is available on the website of SEBI at https://www.sebi.gov.in/sebiweb/other/OtherAction.do?doRecognised=yes. Recognized Intermediaries or at such other website as may be prescribed by SEBI from time to time
Designated Stock Exchange	SME Platform of National Stock Exchange of India Limited ("NSE EMERGE")
DP ID	Depository Participant's Identity number
Draft Abridged Prospectus	Draft Abridged Prospectus dated July 10, 2026, issued in accordance with the provisions of the SEBI ICDR Regulations, containing such salient features, specified by SEBI in this behalf.

Term	Description
Draft Red Herring Prospectus/ DRHP	Draft Red Herring Prospectus dated July 10, 2026, issued in accordance with Section 26 and Section 32 of the Companies Act, 2013 and SEBI (ICDR) Regulations.
Electronic Transfer of Funds	Refunds through ECS, NEFT, Direct Credit or RTGS as applicable.
Eligible FPI(s)	FPI(s) that are eligible to participate in the Issue in terms of applicable law and from such jurisdictions outside India where it is not unlawful to make an Issue / invitation under the Issue and in relation to whom the Bid cum Application Form and the Red Herring Prospectus constitutes an invitation to purchase the Equity Shares.
Eligible NRI(s)	NRI(s) from such jurisdiction outside India where it is not unlawful to make an Issue or invitation under the Issue and in relation to whom this Draft Red Herring Prospectus constitutes an invitation to subscribe for the Equity Shares issued herein on the basis of the terms thereof.
Eligible QFIs	Qualified Foreign Investors from such jurisdictions outside India where it is not unlawful to make an issue or invitation under the Issue and in relation to whom the Draft Red Herring Prospectus constitutes an invitation to purchase the Equity Shares issued thereby and who have opened demat accounts with SEBI registered qualified depositary participants.
Equity Shares	Equity Shares of our Company of Face Value ₹ 10/- each, unless mentioned otherwise.
Escrow Account	The 'no-lien' and 'non-interest bearing' account(s) opened with the Escrow Collection Bank and in whose favour the Anchor Investors will transfer money through NACH/Direct Credit/NEFT/RTGS in respect of the Bid Amount when submitting a Bid.
Escrow Collection Bank	Bank(s), which are clearing members and registered with SEBI as a banker to an issue under the SEBI (Banker to an Issue) Regulations, 1994 and with whom the Escrow Account will be opened, in this case being, [●]
FII/ Foreign Institutional Investors	Foreign Institutional Investor (as defined under SEBI (Foreign Portfolio Investors) Regulations, 2019, as amended) registered with SEBI under applicable laws in India.
First/Sole Bidder	The Bidder whose name shall be mentioned in the Bid cum Application Form or the Revision Form and in case of joint bids, whose name shall also appear as the first holder of the beneficiary account held in joint names.
Floor Price	The lower end of the Price Band, subject to any revision(s) thereto, not being less than the face value of Equity Shares, at or above which the Issue Price will be finalized and below which no Bids will be accepted.
Foreign Venture Capital Investors	Foreign Venture Capital Investors registered with SEBI under the SEBI (Foreign Venture Capital Investor) Regulations, 2000.
FPI/ Foreign Portfolio Investor	A Foreign Portfolio Investor who has been registered pursuant to the SEBI (Foreign Portfolio Investors) Regulations, 2019, provided that any FII who holds a valid certificate of registration shall be deemed to be a foreign portfolio investor till the expiry of the block of three years for which fees have been paid.
Fraudulent Borrower	Fraudulent borrower as defined under Regulation 2(1) (lll) of the SEBI ICDR Regulations
Fugitive Economic Offender	An individual who is declared as a Fugitive Economic Offender under Section 12 of Fugitive Economic Offenders Act, 2018
General Corporate Purpose(s)	Include such identified purposes for which no specific amount is allocated or any amount so specified towards general corporate purpose or any such purpose by whatever name called, in the issue document. Provided that any issue related expenses shall not be considered as a part of general corporate purpose merely because no specific amount has been allocated for such expenses in the issue document.
General Information Document / GID	The General Information Document for investing in public issues prepared and issued in accordance with the circular (CIR/CFD/DIL/12/2013) dated October 23, 2013, notified by SEBI and updated pursuant to the circular (CIR/CFD/POLICYCELL/11/2015) dated November 10, 2015, the circular (CIR/CFD/DIL/1/2016) dated January 1, 2016 and (SEBI/HO/CFD/DIL/CIR/P/2016/26) dated January 21, 2016, circular (SEBI/HO/CFD/DIL2/CIR/P/2018/138) dated November 1, 2018, circular no. (SEBI/HO/CFD/DIL2/CIR/P/2019/50) dated April 3, 2019, circular no.

Term	Description
	(SEBI/HO/CFD/DIL2/CIR/P/2019/76) dated June 28, 2019, circular no. (SEBI/HO/CFD/DIL2/CIR/P/2019/85) dated July 26, 2019 and circular (SEBI/HO/CFD/DCR2/CIR/P/2019/133) dated November 8, 2019 and circular (SEBI/HO/CFD/DIL2/CIR/P/2020/50) dated March 30, 2020, issued by SEBI. The General Information Document is available on the websites of the Stock Exchanges and the Book Running Lead Manager.
Gross Proceeds	Gross proceeds of the Issue that will be available to our Company
Individual investor Portion	The portion of the Issue being not less than 35% of the Net Issue comprising of up to [●] Equity Shares, which shall be available for allocation to Individual Bidders in accordance with the SEBI ICDR Regulations, subject to valid Bids being received at or above the Issue Price, which shall not be less than the minimum application size subject to availability in the Individual Investor Portion, and the remaining Equity Shares to be Allotted on a proportionate basis.
Individual Investors/ IIs/ Individual Bidders/ IBs	Bidders or minors applying through their natural guardians, (including HUFs in the name of Karta and Eligible NRIs) who applies for minimum application size in this Issue.
Issue Agreement	The Issue Agreement dated July 10, 2026, between our Company and Book Running Lead Manager, pursuant to which certain arrangements are agreed to in relation to the Issue.
Issue Documents	Includes this Draft Red Herring Prospectus, the Red Herring Prospectus and Prospectus to be filed with Registrar of Companies.
Issue Price	The Price at which the Equity Shares are being issued by our Company under this Prospectus being ₹ [●] per Equity share, as determined by our Company in consultation with the BRLM.
Issue Proceeds	The proceeds of the Issue as stipulated by our Company. *For further information about use of the Issue Proceeds please refer to Section titled "Objects of the Issue" beginning on page no. 95 of this Draft Red Herring Prospectus*
Issue/ Initial Public Issue/ IPO/ Fresh Issue	Initial public issue of upto 65,96,000 Equity Shares of face value of ₹10.00/- each of our Company for cash at a price of ₹ [●] per Equity Share (including a share premium of ₹ [●] per Equity shares) aggregating to ₹ [●] Lakhs
Listing Agreement	Unless the context specifies otherwise, this means the Equity Listing Agreement to be signed between our Company and SME Platform of National Stock Exchange Limited. (NSE EMERGE)
Market Maker	The Market Maker to the Issue, in this case being [●].
Market Maker Reservation Portion	Up to [●] Equity Shares of our Company for cash at a price of ₹ [●] per Equity Share aggregating to ₹ [●] Lakhs only
Market Making Agreement	The Market Making Agreement dated [●] between our Company, Book Running Lead Manager and Market Maker
Mobile App(s)	The mobile applications listed on the website of SEBI at https://www.sebi.gov.in/sebiweb/other/OtherAction.do?doRecognisedFpi=yes&intmId=40 or such other website as may be updated from time to time, which may be used by IIs to submit Applications using the UPI Mechanism.
Monitoring Agency	[●]
MSME	Micro Small and Medium Enterprise
Mutual Fund Portion	Up to 5% of the Net QIB Portion or up to [●] Equity Shares which shall be available for allocation to Mutual Funds only on a proportionate basis, subject to valid Bids being received at or above the Issue Price
Mutual Fund(s)	Mutual fund (s) registered with SEBI pursuant to the SEBI (Mutual Funds) Regulations, 2026, as amended from time to time
Net Issue	The Issue (excluding the Market Maker Reservation Portion) of [●] Equity Shares each for cash at an Issue price of ₹ [●] per Equity Share aggregating up to ₹ [●] Lakhs Only.
Net Proceeds	The Issue Proceeds, less the Issue related expenses, received by our Company. *For further details, please refer to the section titled "Objects of the Issue" beginning on page no. 95 of this Draft Red Herring Prospectus.*
Net QIB Portion	The portion of the QIB Portion less the number of Equity Shares allocated to the Anchor Investors

Term	Description
Non-Institutional Investors or NIIs or Non-Institutional Bidders	All Bidders, including sub-accounts of FIIs registered with SEBI which are foreign corporate or foreign individuals that are not QIBs or Individual Investors and who have applied for more than minimum application size in this Issue (but not including NRIs other than Eligible NRIs).
Non-Institutional Portion	The portion of the Issue being not less than 15% of the Net Issue comprising of up to [●] Equity Shares which shall be available for allocation to NIIs in accordance with the SEBI ICDR Regulations, to Non-Institutional Bidders, subject to valid Bids being received at or above the Issue Price
NPCI	National Payments Corporation of India (NPCI), a Reserve Bank of India (RBI) initiative, is an umbrella organization for all retail payments in India. It has been set up with the guidance and support of the Reserve Bank of India and Indian Banks Association (IBA)
NR / Non-Resident	A person resident outside India, as defined under FEMA and includes NRIs, FPIs and FVCIs.
Overseas Corporate Body / OCB	Overseas Corporate Body means and includes an entity defined in clause (xi) of Regulation 2 of the Foreign Exchange Management (Withdrawal of General Permission to Overseas Corporate Bodies (OCB's) Regulations, 2003 and which was in existence on the date of the commencement of these Regulations and immediately prior to such commencement was eligible to undertake transactions pursuant to the general permission granted under the Regulations. OCBs are not allowed to invest in this Issue. (A company, partnership, society or other corporate body owned directly or indirectly to the extent of at least 60% by NRIs including overseas trusts in which not less than 60% of the beneficial interest is irrevocably held by NRIs directly or indirectly and which was in existence on October 3, 2003 and immediately before such date was eligible to undertake transactions pursuant to the general permission granted to OCBs under the FEMA.)
Person/ Persons	Any individual, sole proprietorship, unincorporated association, unincorporated organization, body corporate, corporation, company, partnership, limited liability company, joint venture, or trust, or any other entity or organization validly constituted and/or incorporated in the jurisdiction in which it exists and operates, as the context requires.
Price Band	The price band of a minimum price of ₹ [●] per Equity Share (Floor Price) and the maximum price of ₹ [●] per Equity Share (Cap Price) including revisions thereof. The Price Band and the minimum Bid Lot for the Issue will be decided by our Company in consultation with the Book Running Lead Manager, and will be advertised in all editions of English national daily newspaper, Financial Express, all editions of Hindi national daily newspaper, Jansatta and Marathi editions of Mumbai Lakshadeep (Marathi being the regional language of Maharashtra, where our registered office is located), each with a wide circulation, at least two Working Days prior to the Bid/ Issue Opening Date, with the relevant financial ratios calculated at the Floor price and at the Cap Price, and shall be available to the Stock Exchange for the purpose of uploading on their respective website
Pricing Date	The date on which our Company, in consultation with the BRLM, will finalize the Issue Price.
Prospectus	The Prospectus to be filed with the RoC on or after the Pricing Date in accordance with Section 26 of the Companies Act, and the SEBI ICDR Regulations containing, inter alia, the Issue Price that is determined at the end of the Book Building Process, the size of the Issue and certain other information including any addendum or corrigendum thereto
Public Issue Account	The 'no-lien' and 'non-interest bearing' account to be opened, in accordance with Section 40(3) of the Companies Act, with the Public Issue Bank to receive monies from the Escrow Account and the ASBA Accounts on the Designated Date
Public Issue Bank	The banks which are a clearing member and registered with SEBI as a banker to an issue, and with whom the Public Issue Account for collection of Bid Amounts from Escrow Account and ASBA Accounts will be opened, in this case being [●]

Term	Description
QIB Portion	The portion of the Net Issue (including the Anchor Investor Portion) being not more than 50% of the Net Issue, consisting of [●] Equity Shares which are made available for allocation to QIBs (including Anchor Investors) on a proportionate basis, (in which allocation to Anchor Investor are made available on a discretionary basis, as determined by our Company in consultation with the BRLM), subject to valid Bids being received at or above the Issue Price.
Qualified Institutional Buyers or QIBs or Qualified Institutional Bidders	A qualified institutional buyer as defined under Regulation 2(1) (ss) of the SEBI (ICDR) Regulations.
Red Herring Prospectus / RHP	The Red Herring Prospectus to be issued by our Company in accordance with Section 32 of the Companies Act, and the provisions of the SEBI ICDR Regulations, which will not have complete particulars of the price at which the Equity Shares will be issued and the size of the Issue, including any addendum or corrigendum thereto. The Red Herring Prospectus will be filed with the RoC at least three Working Days before the Bid / Issue Opening Date and will become the Prospectus upon filing with the RoC after the Pricing Date.
Refund Account	The 'no-lien' and 'non-interest bearing' account opened with the Refund Bank, from which refunds, if any, of the whole or part, of the Bid Amount to the Anchor Investors shall be made
Refund Bank (s)	The Banker(s) to the Issue with whom the Refund Account(s) will be opened, in this case being [●]
Registered Brokers	Stockbrokers registered with the stock exchanges having nationwide terminals, other than the Members of the Syndicate.
Registrar Agreement	The agreement dated July 02, 2026, entered into between our Company and the Registrar to the Issue in relation to the responsibilities and obligations of the Registrar pertaining to the Issue
Registrar and Share Transfer Agents or RTAs	Registrar and share transfer agents registered with SEBI and eligible to procure Applications at the Designated RTA Locations in terms of circular no. CIR/CFD/POLICYCELL/11/2015 dated November 10, 2015, issued by SEBI.
Registrar to the Issue/RTI/ Registrar	Registrar to the Issue in our case being Mas Services Limited.
Regulations	Unless the context specifies something else, this means the SEBI (Issue of Capital and Disclosure Requirements) Regulations, 2018.
Reserved Category (ies)	Categories of persons eligible for making application under reservation portion
Resident Indian	A person resident in India, as defined under FEMA.
Revision Form	The form used by the Bidders to modify the quantity of Equity Shares or the Bid Amount in any of their ASBA Forms or any previous Revision Form(s), as applicable.
SCORES	SEBI Complaints Redress System.
SCSB Agreement	The deemed agreement between the SCSBs, the Book Running Lead Manager, the Registrar to the Issue and our Company, in relation to the collection of Bid cum Applications from the ASBA Bidders and payment of funds by the SCSBs to the Public Issue Account.
Self-Certified Syndicate Bank(s) or SCSB(s)	The banks registered with SEBI, offering services (i) in relation to ASBA (other than through UPI mechanism), a list of which is available on the website of SEBI at https://www.sebi.gov.in/sebiweb/other/OtherAction.do?doRecognisedFpi=yes&intmId=34 or https://www.sebi.gov.in/sebiweb/other/OtherAction.do?doRecognisedFpi=yes&intmId=35, as applicable, or such other website as updated from time to time, and (ii) in relation to ASBA (through UPI mechanism), a list of which is available on the website of SEBI at https://www.sebi.gov.in/sebiweb/other/OtherAction.do?doRecognised=yes or such other website as updated from time to time.

Term	Description
Specified Locations	Collection Centers where the SCSBs shall accept ASBA Forms, a list of which is available on the website of the SEBI (www.sebi.gov.in) and updated from time to time.
Specified Securities	Equity shares that are being issued through this Draft Red Herring Prospectus.
Sponsor Bank	A Banker to the Issue which is registered with SEBI and is eligible to act as a Sponsor Bank in a public issue in terms of applicable SEBI requirements and has been appointed by our Company, in consultation with the BRLM to act as a conduit between the Stock Exchanges and NPCI to push the UPI Mandate Request in respect of UPI Bidders as per the UPI Mechanism, in this case being [●].
Sub-Syndicate Members	The sub-syndicate members, if any, appointed by the Book Running Lead Manager and the Syndicate Members, to collect ASBA Forms and Revision Forms
Syndicate Agreement	Syndicate agreement to be entered into between our Company, the Registrar and the members of the Syndicate in relation to collection of Bid cum Application Forms by the Syndicate.
Syndicate Members	Intermediaries registered with SEBI who are permitted to accept applications and place order with respect to the Issue and carry out activities as syndicate members.
Systemically Important Non-Banking Financial Company	Systemically important non-banking financial company as defined under Regulation 2(1)(iii) of the SEBI ICDR Regulations
Transaction Registration Slip /TRS	The slip or document issued by a member of the Syndicate or an SCSB (only on demand), as the case may be, to the Bidders, as proof of registration of the Application.
U.S. Securities Act	U.S. Securities Act of 1933, as amended
Underwriters	Underwriters to the Issue are [●]
Underwriting Agreement	The Underwriting Agreement dated [●] entered into between our Company and the Underwriters.
Unified Payments Interface / UPI	Unified Payments Interface (UPI) is an instant payment system developed by the NPCI. It enables merging several banking features, seamless fund routing & merchant payments into one hood. UPI allows instant transfer of money between any two persons' bank accounts using a payment address which uniquely identifies a person's bank a/c.
UPI Bidders	Collectively, individual investors applying as (i) Individual Bidders in the Individual Investor Portion and (ii) Non-Institutional Bidders with an application size of up to ₹5.00 lakhs in the Non-Institutional Portion, and Bidding under the UPI Mechanism through ASBA Form(s) submitted with Syndicate Members, Registered Brokers, Collecting Depository Participants and Registrar and Share Transfer Agents. Pursuant to Circular no. SEBI/HO/CFD/DIL2/P/CIR/P/2022/45 dated April 5, 2022 issued by SEBI, all individual investors applying in public issues where the application amount is up to ₹5.00 lakhs using UPI Mechanism, shall provide their UPI ID in the bid-cum-application form submitted with: (i) a syndicate member, (ii) a stock broker registered with a recognized stock exchange (whose name is mentioned on the website of the stock exchange as eligible for such activity), (iii) a depository participant (whose name is mentioned on the website of the stock exchange as eligible for such activity), and (iv) a registrar to an Issue and share transfer agent (whose name is mentioned on the website of the stock exchange as eligible for such activity)
UPI Circulars	SEBI circular no. SEBI/HO/CFD/DIL2/CIR/P/2018/138 dated November 1, 2018, SEBI circular no. SEBI/HO/CFD/DIL2/CIR/P/2019/50 dated April 3, 2019, SEBI circular no. SEBI/HO/CFD/DIL2/CIR/P/2019/76 dated June 28, 2019, SEBI circular no. SEBI/HO/CFD/DIL2/CIR/P/2019/85 dated July 26, 2019, SEBI circular no. SEBI/HO/CFD/DCR2/CIR/P/2019/133 dated November 8, 2019, SEBI Circular no. SEBI/HO/CFD/DIL2/CIR/P/2020/50 dated March 30, 2020, SEBI Circular no. SEBI/HO/CFD/DIL2/CIR/P/2021/2480/1/M dated March 16, 2021, SEBI circular no. SEBI/HO/CFD/DIL1/CIR/P/2021/47 dated March 31,

Term	Description
	2021, SEBI circular no. SEBI/HO/CFD/DIL2/P/CIR/2021/570 dated June 2, 2021, SEBI circular no. SEBI/HO/CFD/DIL2/CIR/P/2022/45 dated April 5, 2022, SEBI circular no. SEBI/HO/CFD/DIL2/CIR/P/2022/51 dated April 20, 2022, SEBI circular no. SEBI/HO/CFD/DIL2/P/CIR/2022/75 dated May 30, 2022, SEBI master circular with circular no. SEBI/HO/MIRSD/POD1/P/CIR/2023/70 dated May 17, 2023 (to the extent that such circulars pertain to the UPI Mechanism), SEBI master circular no. SEBI/HO/CFD/PoD-2/P/CIR/2023/00094 dated June 21, 2023, SEBI circular no. SEBI/HO/CFD/TPD1/CIR/P/2023/140 dated August 9, 2023 along with the circular issued by the National Stock Exchange of India Limited having reference no. 25/2022 dated August 3, 2022, SEBI master circular number HO/49/14/14(2)2026-CFD-POD2/I/4518/2026 dated February 09, 2026 and any subsequent circulars or notifications issued by SEBI in this regard.
UPI ID	ID created on Unified Payment Interface (UPI) for single-window mobile payment system developed by the National Payments Corporation of India (NPCI)
UPI Mandate Request	A request (intimating the IIs by way of a notification on the UPI application and by way of a SMS directing the IIs to such UPI application) to the II initiated by the Sponsor Bank to authorize blocking of funds on the UPI application equivalent to Bid Amount and subsequent debit of funds in case of Allotment. In accordance with SEBI Circular No. SEBI/HO/CFD/DIL2/CIR/P/2019/76 dated June 28, 2019 and SEBI Circular No. SEBI/HO/CFD/DIL2/CIR/P/2019/85 da ted July 26, 2019, Individual Bidders/ Investors, using the UPI Mechanism may apply through the SCSBs and mobile applications whose names appears on the website of the SEBI (https://www.sebi.gov.in/sebiweb/other/OtherAction.do?doRecognisedFi=yes&intmid=40) and (https://www.sebi.gov.in/sebiweb/other/OtherAction.do?doRecognisedFpi=yes&intmId=43) respectively, as updated from time to time
UPI Mechanism	Process for applications by UPI Bidders submitted with intermediaries with UPI as mode of payment, in terms of the UPI Circulars
UPI Pin	Password to authentic UPI Transaction
Wilful Defaulter(s) or Fraudulent Borrower(s)	A person or an issuer who or which is categorized as a wilful defaulter or a fraudulent borrower by any bank or financial institution (as defined under the Companies Act, 2013) or consortium thereof, in accordance with the guidelines on wilful defaulters or fraudulent borrowers issued by the Reserve Bank of India, as defined under Regulation 2(1)(iii) of SEBI (ICDR) Regulations.
Working Days	In terms of Regulation 2(1)(mmm) of SEBI ICDR Regulations, working day means all days on which commercial banks in Mumbai are open for business; provided however, with reference to

TECHNICAL AND INDUSTRY RELATED TERMS

Term	Description
B2B (Business-to-Business)	Business model involving sale of products to wholesalers, distributors, industrial users, institutions or other business entities.
B2C (Business-to-Consumer)	Business model involving direct sale of products to end consumers through retail outlets, e-commerce platforms or other consumer channels.
Backward Integration	Business strategy involving control over raw material sourcing and upstream activities.
Bagasse	Fibrous residue remaining after extraction of juice from sugarcane. It is commonly used as boiler fuel, for captive power generation, paper manufacturing and other industrial applications.
Brix	Measurement of dissolved solids, primarily sugar content, present in sugarcane juice and used as an indicator of crop maturity and quality.

Term	Description
Centrifuge	High-speed rotating equipment used to separate sugar crystals from molasses using centrifugal force.
Clarification	Process of removing impurities from sugarcane juice through heating, liming and settling.
Crushing Season	Period during which harvested sugarcane is processed into Jaggery, Sugar and related products. In India, it generally extends from October-November to April-May.
Crystallization	Process through which sugar crystals are formed from concentrated sugar syrup.
Food Processing	Transformation of agricultural produce into value-added food products through various processing techniques.
Instant Premix	Semi-processed food product requiring minimal preparation before consumption.
Molasses	Viscous by-product generated after separation of sugar crystals from concentrated sugar syrup.
Nursery	Cultivation area used for propagation and growth of sugarcane seed material.
Package Scheme of Incentives (PSI), 2019	A scheme by the Government of Maharashtra that provides various fiscal and non-fiscal incentives to encourage industrial growth in the state.
Press Mud	Semi-solid residue generated during clarification of sugarcane juice, commonly used as organic manure and fertilizer.
Product Diversification	Expansion into multiple product categories to reduce business concentration risk.
Raw Juice	Juice extracted directly from sugarcane during the milling process before clarification.
Ready-to-Eat (RTE) Foods	Fully processed food products intended for direct consumption without preparation.
Sugarcane Crushing	Mechanical process of extracting juice from harvested sugarcane.
TCD (Tonnes Crushed per Day)	Industry measure indicating the quantity of sugarcane that can be processed by a manufacturing facility in one day.
Value-Added Products	Products manufactured by processing or enhancing a primary product to improve usability, marketability or value.
Weighbridge	Electronic weighing system used for recording the weight of incoming and outgoing vehicles carrying raw materials or finished products.
Yield	Quantity of output obtained from a given quantity of raw material or cultivated area.
Zero-Wastage Model	Manufacturing approach where by-products and residues are either reused internally or commercially utilised instead of being discarded.

CONVENTIONAL AND GENERAL TERMS/ABBREVIATION

Term	Description
A/c	Account
ACS	Associate Company Secretary
AGM	Annual General Meeting
AIF	Alternative Investment Fund as defined in and registered with SEBI under the SEBI AIF Regulations
AS / Accounting Standards	Accounting Standards as issued by the Institute of Chartered Accountants of India
ASBA	Applications Supported by Blocked Amount
AY	Assessment Year
B2B	Business to Business
B2C	Business to Consumer
Banking Regulation Act	Banking Regulation Act, 1949
BN	Billion
BSE	BSE Limited
CAGR	Compound Annual Growth Rate
CARO	Companies (Auditor's Report) Order, 2020, as amended
Category I Foreign Portfolio Investor(s) / Category I FPIs	FPIs who are registered as "Category I Foreign Portfolio Investors" under the SEBI FPI Regulations

Term	Description
Category II Foreign Portfolio Investor(s) / Category II FPIs	FPIs who are registered as "Category II Foreign Portfolio Investors" under the SEBI FPI Regulations
Category III Foreign Portfolio Investor(s) / Category III FPIs	FPIs who are registered as "Category III Foreign Portfolio Investors" under the SEBI FPI Regulations
CDSL	Central Depository Services (India) Limited
CEFPPC	Scheme for Creation / Expansion of Food Processing and Preservation Capacities
CFO	Chief Financial Officer
CFPI	Consumer Food Price Index
CGST Act	Central Goods and Services Tax Act, 2017
CGTMSE	Credit Guarantee Fund Trust for Micro and Small Enterprises
CIBIL	Credit Information Bureau (India) Limited
CIN	Company Identification Number
CIT	Commissioner of Income Tax
Client ID	Client Identification Number maintained with one of the Depositories in relation to Demat Account.
Companies Act	Unless specified otherwise, this would imply to the provisions of the Companies Act, 2013 (to the extent notified) and /or Provisions of Companies Act, 1956 w.r.t. the sections which have not yet been replaced by the Companies Act, 2013 through any official notification
Companies Act, 1956	The Companies Act, 1956, as amended from time to time
Companies Act, 2013	The Companies Act, 2013 published on August 29, 2013 and applicable to the extent notified by MCA till date
Consolidated FDI Policy	Consolidated FDI Policy refers to the comprehensive and unified set of rules and regulations governing Foreign Direct Investment (FDI) in India, as periodically updated by the Indian government
COVID – 19	A public health emergency of international concern as declared by the World Health Organization on January 30, 2020 and a pandemic on March 11, 2020
CPI	Consumer Price Index
CPSE	Central Public Sector Enterprise
CSR	Corporate Social Responsibility
CST	Central Sales Tax
CY	Calendar Year
Depositories	A depository registered with the SEBI under the Securities and Exchange Board of India (Depositories and Participants) Regulations, 1996, CDSL and NSDL
Depositories Act	Depositories Act, 1996
DIN	Director Identification Number
DP	Depository Participant, as defined under the Depositories Act 1996
DP ID	Depository Participant's identification
DPIIT	Department for Promotion of Industry and Internal Trade, Ministry of Commerce and Industry, Government of India
EBIT	Earnings Before Interest and Taxes
EBITDA	Earnings before Interest, Taxes, Depreciation and Amortization
ECS	Electronic Clearing System
EGM/ EoGM	Extra-ordinary General Meeting
EMDEs	Emerging Markets and Developing Economies
EPF Act	The Employees' Provident Funds and Miscellaneous Provisions Act, 1952
EPFO	Employees' Provident Fund Organization
EPS	Earnings Per Share
ERP	Enterprise Resource Planning
ESG	Environmental, Social and Governance
ESIC	Employee State Insurance Corporation
ESOP	Employee Stock Option Plan
ESPS	Employee Stock Purchase Scheme
FAS	Foreign Agricultural Service
FCNR Account	Foreign Currency Non-Resident Account
FDI	Foreign Direct Investment

Term	Description
FEMA	Foreign Exchange Management Act, 1999, read with rules and regulations thereunder
FEMA Regulations	Foreign Exchange Management (Non-debt Instruments) Rules, 2019 and Foreign Exchange Management (Mode of Payment and Reporting of Non-Debt Instruments) Regulations, 2019
FIIs	Foreign Institutional Investors as defined under the SEBI FPI Regulations
FIPB	Foreign Investment Promotion Board
FMCG	Fast Moving Consumer Goods
FPIs	Foreign Portfolio Investors as defined under the SEBI FPI Regulations
FRE	First Revised Estimates
FSSAI	Food Safety and Standards Authority of India
FTP	Foreign Trade Policy
Fugitive Economic Offender	An individual who is declared a fugitive economic offender under Section 12 of the Fugitive Economic Offenders Act, 2018
FVCI	Foreign Venture Capital Investors as defined and registered under the SEBI FVCI Regulations
FY / Fiscal / Financial Year	Period of twelve months ended March 31 of that particular year, unless otherwise stated
GDP	Gross Domestic Product
GeM	Government e-Marketplace
GFCF	Gross Fixed Capital Formation
GNDI	Gross National Disposable Income
GoI / Government	Government of India
GST	Goods & Services Tax
GVA	Gross Value Added
HNIs	High Net worth Individuals
HUF	Hindu Undivided Family
I.T. Act	Income Tax Act, 2025, as amended from time to time
IAS Rules	Indian Accounting Standards, Rules 2015
ICAI	The Institute of Chartered Accountants of India
ICMAI	Institute of Cost Accountants of India
ICSI	Institute of Company Secretaries of India
IFRS	International Financial Reporting Standards
IGST Act	Integrated Goods and Services Tax Act, 2017
IIP	Index of Industrial Production
IMF	International Monetary Fund
Ind AS	Indian Accounting Standards prescribed under section 133 of the Companies Act, 2013, as notified under the Companies (Indian Accounting Standard) Rules, 2015
Indian GAAP	Generally Accepted Accounting Principles in India
INR	Indian Rupee
IPO	Initial Public Offering
IRDAI Investment Regulations	Insurance Regulatory and Development Authority (Investment) Regulations, 2016
ISO	International Organization for Standardization
IST	Indian Standard Time
KM / Km / km	Kilo Meter
KMP	Key Managerial Personnel
LFPR	Labour Force Participation Rate
Ltd	Limited
MCA	Ministry of Corporate Affairs, Government of India
Merchant Banker	Merchant Banker as defined under the Securities and Exchange Board of India (Merchant Bankers) Regulations, 1992, as amended
MICR	Magnetic Ink Character Recognition
MoF	Ministry of Finance, Government of India
MOFPI	Ministry of Food Processing Industries
MOSPI	Ministry of Statistics and Programme Implementation
MOU	Memorandum of Understanding

Term	Description
MSME	Micro, Small and Medium Enterprise
NA / N. A.	Not Applicable
NABARD	National Bank for Agriculture and Rural Development
NACH	National Automated Clearing House
NAV	Net Asset Value
NBFC	Non-Banking Financial Company
NECS	National Electronic Clearing Service
NECS	National Electronic Clearing Service
NEFT	National Electronic Fund Transfer
NOC	No Objection Certificate
NPCI	National Payments Corporation of India
NRE Account	Non-Resident External Account
NRO Account	Non-Resident Ordinary Account
NSDL	National Securities Depository Limited
NSE	National Stock Exchange of India Limited
OPC	One Person Company as defined under section 2(62) of The Companies Act, 2013
p.a.	per annum
P/E Ratio	Price/Earnings Ratio
PAC	Persons Acting in Concert
PAN	Permanent Account Number
PAT	Profit After Tax
Per Capita GDP	Gross Domestic Product per capita
PESTEL	Political, Economic, Social, Technological, Environmental and Legal
PFCE	Private Final Consumption Expenditure
PIB	Press Information Bureau
PLISFPI	Production Linked Incentive Scheme for Food Processing Industry
PLR	Prime Lending Rate
PMFME	Pradhan Mantri Formalisation of Micro Food Processing Enterprises
PMI	Purchasing Managers' Index
PMKSY	Pradhan Mantri Kisan Sampada Yojana
PPP	Purchasing power parity
PSI	Package Scheme of Incentives
RBI	Reserve Bank of India
Regulation S	Regulation S under the U.S. Securities Act
RoC	Registrar of Companies
ROCE	Return on Capital Employed
ROE	Return on Equity
RONW	Return on Net Worth
RTE	Ready-to-Eat
RTGS	Real Time Gross Settlement
Rupees / Rs. / ₹	Rupees, the official currency of the Republic of India
SAE	Second Advance Estimates
SCRA	Securities Contract (Regulation) Act, 1956, as amended from time to time
SCRR	Securities Contracts (Regulation) Rules, 1957, as amended from time to time
SEBI	Securities and Exchange Board of India
SEBI Act	Securities and Exchange Board of India Act, 1992
SEBI AIF Regulations	Securities and Exchange Board of India (Alternative Investments Funds) Regulations, 2012, as amended
SEBI FPI Regulations	Securities and Exchange Board of India (Foreign Portfolio Investors) Regulations, 2019, as amended
SEBI FVCI Regulations	Securities and Exchange Board of India (Foreign Venture Capital Investor) Regulations, 2000, as amended
SEBI ICDR Regulations	Securities and Exchange Board of India (Issue of Capital and Disclosure Requirements) Regulations, 2018, as amended
SEBI LODR Regulations	Securities and Exchange Board of India (Listing Obligations and Disclosure Requirements) Regulations, 2015, as amended

Term	Description
SEBI MB Regulations	Securities and Exchange Board of India (Merchant Bankers) Regulations, 1992, as amended
SEBI PIT Regulations	Securities and Exchange Board of India (Prohibition of Insider Trading) Regulations, 2015, as amended
SEBI SAST Regulations	Securities and Exchange Board of India (Substantial Acquisition of Shares and Takeovers) Regulations, 2011, as amended
Sec.	Section
Securities Act	U.S. Securities Act of 1933, as amended
SGST Act	State Goods and Services Tax Act, 2017
SICA	Sick Industrial Companies (Special Provisions) Act, 1985
STT	Securities Transaction Tax
TDS	Tax Deducted at Source
TIN	Taxpayers Identification Number
TReDS	Trade Receivables Discounting System
UGST Act	Union Territory Goods and Services Tax Act, 2017
UPAG	Unified Portal for Agricultural Statistics
UPI	Unified Payments Interface, a payment mechanism that allows instant transfer of money between any two persons bank account using a payment address which uniquely identifies a person's bank account.
US/United States	United States of America
USD/ US$/ $	United States Dollar, the official currency of the Unites States of America
USDA	United States Department of Agriculture
VAT	Value Added Tax
VC	Venture Capital
VCF / Venture Capital Fund	Venture Capital Funds as defined under the erstwhile SEBI VCF Regulations or the SEBI AIF Regulations, as the case may be, registered with SEBI
WEO	World Economic Outlook
WHO	World Health Organization
Wilful Defaulter(s) or a Fraudulent Borrower	Wilful defaulter or a Fraudulent Borrower as defined under Regulation 2(1)(lll) of the SEBI ICDR Regulations
WIP	Work in process
YoY	Year on Year

Notwithstanding the foregoing:

- *In the section titled "Main Provisions of Articles of Association" beginning on page no. 375 of this Draft Red Herring Prospectus, defined terms shall have the meaning given to such terms in that section;*
- *In the chapters titled "Our Business" beginning on page no. 147 respectively, of this Draft Red Herring Prospectus, defined terms shall have the meaning given to such terms in that section;*
- *In the section titled "Risk Factors" beginning on page no. 22 of this Draft Red Herring Prospectus, defined terms shall have the meaning given to such terms in that section;*
- *In the chapter titled "Statement on Special Tax Benefits" beginning on page no. 117 of this Draft Red Herring Prospectus, defined terms shall have the meaning given to such terms in that section;*
- *In the chapter titled "Management's Discussion and Analysis of Financial Position and Results of Operations" beginning on page no. 265 of this Draft Red Herring Prospectus, defined terms shall have the meaning given to such terms in that section.*

CERTAIN CONVENTIONS, USE OF FINANCIAL INFORMATION AND MARKET DATA AND CURRENCY OF PRESENTATION

CERTAIN CONVENTIONS

All references to 'India' contained in this Draft Red Herring Prospectus are to the Republic of India and its territories and possessions and all references herein to the 'Government', 'Indian Government', 'GoI', 'Central Government' or the 'State Government' are to the GoI, Central or State, as applicable.

Unless otherwise specified, any time mentioned in this Draft Red Herring Prospectus is in Indian Standard Time ("IST").

Unless indicated otherwise, all references to a year in this Draft Red Herring Prospectus are to a financial year.

In this Draft Red Herring Prospectus, the terms "we", "us", "our", the "Company", "our Company", "Shree Siddhivinayak Greentech", "Shree Siddhivinayak Greentech Industries", "Shree Siddhivinayak Greentech Industries Limited" and, unless the context otherwise indicates or implies, refers to Shree Siddhivinayak Greentech Industries Limited in this Draft Red Herring Prospectus.

Further unless the context otherwise requires, all references to one gender also refers to another gender.

FINANCIAL DATA

Unless stated otherwise, the financial data included in this Draft Red Herring Prospectus are extracted from the Restated financial statements of our Company, prepared in accordance with the applicable provisions of the Companies Act and Indian GAAP and restated in accordance with SEBI (ICDR) Regulations, as stated in the report of our Peer Reviewed Auditors, set out in the Section titled *"Financial Information" beginning on page no. 227* of this Draft Red Herring Prospectus.

Our Company's financial year commences on April 01 and ends on March 31 of the next calendar year. Accordingly, all references in this Draft Red Herring Prospectus to a particular "Financial Year", "Fiscal" or "Fiscal Year", unless stated otherwise, are to the 12 month period ended on March 31 of that particular calendar year.

In this Draft Red Herring Prospectus, any discrepancies in any table between the total and the sums of the amounts listed are due to rounding off. All figures in decimals have been rounded off to the second decimal and all percentage figures have been rounded off to two decimal places. In certain instances, (i) the sum or percentage change of such numbers may not conform exactly to the total figure given; and (ii) the sum of the numbers in a column or row in certain tables may not conform exactly to the total figure given for that column or row.

There are significant differences between Indian GAAP, IFRS and US GAAP. Our Company has not attempted to quantify their impact on the financial data included herein and urges you to consult your own advisors regarding such differences and their impact on the Company's financial data. Accordingly, to what extent, the financial statements included in this Draft Red Herring Prospectus will provide meaningful information is entirely dependent on the reader's level of familiarity with Indian accounting practices / Indian GAAP. Any reliance by persons not familiar with Indian accounting practices on the financial disclosures presented in this Draft Red Herring Prospectus should accordingly be limited.

Any percentage amounts, as set forth in chapters/sections titled *"Risk Factors", "Our Business", "Management's Discussion and Analysis of Financial Position and Results of Operations"* and elsewhere in this Draft Red Herring Prospectus unless otherwise indicated, have been calculated on the basis of Our Company's restated financial statements prepared in accordance with the applicable provisions of the Companies Act and Indian GAAP and restated in accordance with SEBI (ICDR) Regulations, as stated in the report of our Peer Reviewed Auditor, set out in the Section titled *"Financial Information" beginning on page no. 227* of this Draft Red Herring Prospectus.

Non-GAAP Measures

Certain non-GAAP measures presented in this Draft Red Herring Prospectus such as Net Asset Value per Equity Share, EBITDA, EBITDA Margin, Return on Capital Employed. Debt to Equity Ratio and Net Worth (collectively "Non-GAAP Measures") are a supplemental measure of our performance and liquidity that are not required by, or presented in accordance with, Accounting Standards.

CURRENCY AND UNITS OF PRESENTATION

All references to "Rupees", "Rs.", "INR", or "₹" are to Indian Rupees, the official currency of the Republic of India. All references to "£" or "GBP" are to Great Britain Pound, the official currency of the United Kingdom. All references to "$", "US$", "USD", "U.S. $" or "U.S. Dollars" are to United States Dollars, the official currency of the United States of America.

Our Company has presented certain numerical information in this Draft Red Herring Prospectus in "Lakh" units. One lakh represents 1,00,000. In this Draft Red Herring Prospectus, any discrepancies in any table between the total and the sums of the amounts listed therein are due to rounding-off.

All references to 'million' / 'Million' / 'Mn' refer to one million, which is equivalent to 'ten lacs' or 'ten lakhs', the word 'Lacs / Lakhs / Lac' means 'one hundred thousand' and 'Crore' means 'ten million and 'billion / bn/ Billions' means 'one hundred crores'.

INDUSTRY AND MARKET DATA

Unless stated otherwise, industry and market data used in this Draft Red Herring Prospectus has been derived from a report titled "*Processed Food Industry w.r.t Jaggery, Khandsari & Instant Premix*" dated July 10, 2026 (the "**Infomerics Analytics & Research Report**") which have been commissioned and paid for by the Book Running Lead Manger and prepared by Infomerics Analytics & Research Private Limited exclusively for the purpose of understanding the industry our Company operates in, in connection with the Issue. The Infomerics Analytics & Research Report is available on the website of our Company at www.shreesiddhivinayakgreentech.com , until the Issue Closing Date. Infomerics Analytics & Research Private Limited has confirmed pursuant to its letter dated July 10, 2026, that it is an independent agency and is not related, in any manner, to our Company, our Directors, our Promoters, our Key Managerial Personnel, our Senior Management or the Book Running Lead Manager.

References to Report on Processed Food Industry w.r.t Jaggery, Khandsari & Instant Premix in the chapter titled "Industry Overview" beginning on page no. 119 of this Draft Red Herring Prospectus are in accordance with the presentation, analysis and categorisation in the Infomerics Analytics & Research Report. Further, industry sources and publications are prepared based on information as of specific dates and may no longer be current or reflect current trends.

The extent to which the industry and market data presented in this Draft Red Herring Prospectus is meaningful depends upon the reader's familiarity with and understanding of the methodologies used in compiling such information. There are no standard data gathering methodologies in the industry in which we conduct business, and the methodologies and assumptions may vary widely among different market and industry sources. *Such information involves risks, uncertainties and numerous assumptions and is subject to change based on various factors, including those discussed in the Section titled "Risk Factors" beginning on page no. 22 of this Draft Red Herring Prospectus. Accordingly, no investment decisions should be made based on such information.*

In accordance with the SEBI ICDR Regulations, the section titled "Basis for Issue Price" beginning on page 107 includes information relating to our peer group companies. Such information has been derived from publicly available sources.

(The rest of the page is intentionally left blank)

FORWARD-LOOKING STATEMENTS

All statements contained in the Draft Red Herring Prospectus that are not statements of historical facts constitute "forward- looking statements". All statements regarding our expected financial condition and results of operations, business, objectives, strategies, plans, goals and prospects are forward-looking statements. These forward-looking statements include statements as to our business strategy, our revenue and profitability, planned projects and other matters discussed in the Draft Red Herring Prospectus regarding matters that are not historical facts. These forward-looking statements and any other projections contained in the Draft Red Herring Prospectus (whether made by us or any third party) are predictions and involve known and unknown risks, uncertainties and other factors that may cause our actual results, performance or achievements to be materially different from any future results, performance or achievements expressed or implied by such forward-looking statements or other projections.

These forward looking statements include statements which can generally be identified by words or phrases such as "aim", "anticipate", "are likely", "believe", "continue", "can", "could", "expect", "estimate", "intend", "may", "likely", "objective", "plan", "project", "propose", "seek to", "shall", "will", "will achieve", "will continue", "will likely", "will pursue" or other words or phrases of similar import. Similarly, statements that describe the strategies, objectives, plans or goals of our Company are also forward-looking statements. However, these are not the exclusive means of identifying forward-looking statements. All forward looking statements are subject to risks, uncertainties and assumptions about us that could cause actual results to differ materially from those contemplated by the relevant forward-looking statement.

Certain important factors that could cause actual results to differ materially from our expectations include, but are not limited to:

i. Unpredictable weather patterns, including unseasonal rains, droughts, heatwaves, or water scarcity, impacting the quality and yield of sugarcane and/or sugarcane seeds;
ii. Our ability to manage and sustain our growth, implement our strategies;
iii. Our ability to attract, manage and retain skilled manpower;
iv. Revenues from and demand for our products;
v. Inability to maintain and develop our brand;
vi. Adverse statutory and regulatory actions from Income Tax Department or any other statutory or regulatory authority;
vii. Inflation, deflation, unanticipated turbulence in interest rates, equity prices or other rates or prices;

[For further discussion of factors that could cause the actual results to differ from the expectations, see the sections/chapters titled "Risk Factors", "Our Business" and "Management's Discussion and Analysis of Financial Position and Results of Operations" beginning on page number 22, 147 and 265 respectively of this Draft Red Herring Prospectus.]

By their nature, certain market risk disclosures are only estimates and could be materially different from what occurs in the future. As a result, actual gains or losses could materially differ from those that have been estimated.

Forward-looking statements reflect the current views as of the date of this Draft Red Herring Prospectus and are not a guarantee of future performance. These statements are based on the management's beliefs and assumptions, which in turn are based on currently available information. Although our Company believes the assumptions upon which these forward-looking statements are based, are reasonable, any of these assumptions could prove to be inaccurate, and the forward-looking statements based on these assumptions could be incorrect. None of our Company, the Directors, the BRLM, or any of their respective affiliates have any obligation to update or otherwise revise any statements reflecting circumstances arising after the date hereof or to reflect the occurrence of underlying events, even if the underlying assumptions do not come to fruition. Our Company and the Directors will ensure that investors in India are informed of material developments until the time of the grant of listing and trading permission by the Stock Exchange.

(The rest of the page is intentionally left blank)

SECTION II: RISK FACTORS

An investment in equity shares involves a high degree of risk. Prospective investors should carefully consider all the information in this Draft Red Herring Prospectus, including the risks and uncertainties described below, before making an investment in our Equity Shares. The risks described below are not the only ones relevant to us or our Equity Shares, the industry in which we operate or to India and other jurisdictions we operate in. Additional risks and uncertainties, not currently known to us or that we currently do not deem material may also adversely affect our business, results of operations, financial condition and cash flows. If any or a combination of the following risks, or other risks that are not currently known or are not currently deemed material, actually occur, our business, results of operations, financial condition and cash flows could be adversely affected, the price of our Equity Shares could decline, and investors may lose all or part of their investment. In order to obtain a more detailed understanding of our Company and our business, prospective investors should read this section in conjunction with chapter titled "Our Business", "Industry Overview", "Management's Discussion and Analysis of Financial Condition and Results of Operations" and "Restated Financial Statement" beginning on page no. 147, 119, 265, and 227 respectively of this Draft Red Herring Prospectus, as well as the other financial information contained in this Draft Red Herring Prospectus.

In making an investment decision, prospective investors should consult their tax, financial and legal advisors about the particular consequences of investing in the Issue and rely on their own examinations of us and the terms of the Issue, including the merits and the risks involved. Unless specified or quantified in the relevant risk factors below, we are unable to quantify the financial or other impact of any of the risks described in this section. Prospective investors in our Equity Shares should pay particular attention to the fact that our Company is incorporated under the laws of India and is subject to a legal and regulatory environment in India, which may differ in certain respects from that of other countries.

This Draft Red Herring Prospectus also contains certain forward-looking statements that involve risks, assumptions, estimates and uncertainties. Our actual results could differ from those anticipated in these forward looking statements as a result of certain factors, including the risks described below and elsewhere in this Draft Red Herring Prospectus. [For further information, see chapter titled "Forward-Looking Statements" beginning on page no. 21 of this Draft Red Herring Prospectus. Unless otherwise indicated, the financial information included herein is based on our Restated Financial Information included in this Draft Red Herring Prospectus. For further information, see chapter titled "Restated Financial Statement" beginning on page no. 227 of this Draft Red Herring Prospectus.]

INTERNAL RISKS FACTORS

1. **We are significantly dependent on the sale of our products namely, "Jaggery Powder", "Khandsari Sugar", "Jaggery-based pre-mix products" "Cane seeds" and "By-Prodcuts". Inability to anticipate and adapt to evolving consumer preferences and demand for products or ensure product quality may adversely impact the demand for our products and customer loyalty and consequently impact our business, results of operations, financial condition and cash flows.**

Our company initially started with the manufacturing of Jaggery Powder in the FY 2023-2024. Thereafter, our company entered the segment of value added food products of Jaggery based pre-mixes (Instant Rice Kheer, Jaggery Tea, Jaggery Laddoo, Jaggery Lapsi, and Jaggery Coffee premixes) during the FY 2024-2025. Thereafter, our company started the manufacturing of Khandsari Sugar during FY 2025-2026. Further during the same period our company also ventured into backward integration of of cultivation and sale of Sugarcane Seeds ("Cane Seeds").

Our future business prospects are dependent on the demand for our products in Indian markets. Our financial performance is dependent primarily on the sale of our products i.e. Jaggery Powder, Khandsari Sugar, Jaggery-based pre-mix products, Cane seeds and "By Products".

(The rest of the page is intentionally left blank)

The following table sets forth information on our product mix in the periods indicated:

Category	FY 2025-2026		FY 2024-2025		FY 2023-2024	
	₹ in Lakhs	% of total sales of product	₹ in Lakhs	% of total sales of product	₹ in Lakhs	% of total sales of product
Jaggery Powder	6,493.78	86.28	5,079.33	86.73	3,299.58	90.96
Khandsari Sugar	85.21	1.13	NA	NA	NA	NA
By Products*	286.11	3.80	337.65	5.77	328.06	9.04
Jaggery-based pre-mix products	95.33	1.27	439.65	7.51	NA	NA
Cane Seeds	566.34	7.52	NA	NA	NA	NA
Total	**7,526.77**	**100.00**	**5,856.63**	**100.00**	**3,627.64**	**100.00**

*Bifurcation of the by products sold for the last 3 financial years are provided hereunder:

Category	FY 2025-2026		FY 2024-2025		FY 2023-2024	
	₹ in Lakhs	% of total sales of by products	₹ in Lakhs	% of total sales of by products	₹ in Lakhs	% of total sales of by products
Bagasse	132.69	46.38	124.15	36.77	322.47	98.30
Molasses	133.35	46.61	198.12	58.68	0.00	0.00
Pressmud	15.44	5.40	13.51	4.00	5.27	1.61
Ash	4.63	1.62	1.79	0.53	0.32	0.10
Scrap Sale	0.00	0.00	0.09	0.03	0.00	0.00
Total	**286.11**	**100.00**	**337.65**	**100.00**	**328.06**	**100.00**

Any decrease in demand for these products can have an adverse impact on our business, results of operations, financial conditions and cash flows. Further, any disruption in the supply chain for these products, such as delays in delivery or quality issues, may impact our ability to meet customer demand and result in loss of sales.

Demand for our products depends primarily on consumer-related factors such as regional or locality-based tastes, demographics, consumer confidence in our products by B2B and B2C Customers, as well as evolving consumer tastes and preferences. The tastes and preferences of our consumers may also change over time, and we cannot assure you that we will be able to adapt our product portfolio to shift in consumer preferences and tastes. We may also be required to invest in updated technology and processes to develop products having the desired qualities and characteristics and continually monitor and adapt to evolving market demand. Our failure to anticipate, identify or react to changes in these trends could, among other things, lead to reduced demand and price reductions, and could have an adverse effect on our business, results of operations, financial condition and cash flows. Additionally, we are subject to the preferences of consumers in the Indian market in relation to the characteristics, ingredient profile and range of our products. Factors that may affect consumer perception of our products include dietary trends and attention to certain nutritional aspects of foods. Our success depends, in part, on our ability to anticipate the tastes and dietary habits of consumers and to offer products that appeal to their needs and preferences on a timely and affordable basis. We may not be able to introduce new products that are in faster growing and more profitable categories.

While we have not experienced any of the above risks that had an adverse impact on our business operations and financial conditions in the last three Financial Years, we cannot assure you that these risks will not arise in the future.

For further details in relation to Company's products*, see the head 'Our Product Overview' under the Chapter titled "Our Business" on page no. 149 of this Draft Red Herring Prospectus.*

(The rest of the page is intentionally left blank)

2. **The sale of our products is concentrated in our core market of Maharashtra, Madhya Pradesh, Assam and Uttar Pradesh. Any adverse developments affecting our operations in such region, could have an adverse impact on our business, financial condition, results of operations and cash flows.**

The sale of our products is majorly concentrated in the state of Maharashtra, Madhya Pradesh, Assam and Uttar Pradesh. The following table sets forth our revenue from operations from various States of India, in the periods indicated:

a) **Geography-wise details of the Jaggery Powder sold for the last 3 financial years are provided hereunder**:

State	FY 2025-2026		FY 2024-2025		FY 2023-2024	
	₹ in Lakhs	% of total sale of Jaggery Powder	₹ in Lakhs	% of total sale of Jaggery Powder	₹ in Lakhs	% of total sale of Jaggery Powder
Maharashtra	3780.58	58.22	1561.84	30.75	1323.05	40.10
Madhya Pradesh	2092.97	32.23	2934.34	57.77	1349.51	40.90
Assam	317.30	4.89	0.00	0.00	0.00	0.00
Uttar Pradesh	300.53	4.63	540.36	10.64	0.00	0.00
Kerala	2.40	0.04	0.00	0.00	0.00	0.00
Bihar	0.00	0.00	13.13	0.26	0.00	0.00
Karnataka	0.00	0.00	29.66	0.58	627.02	19.00
Total	**6493.78**	**100.00**	**5079.33**	**100.00**	**3299.58**	**100.00**

b) **Geography-wise details of the Khandsari Sugar sold for the last 3 financial years are provided hereunder**:

State	FY 2025-2026		FY 2024-2025		FY 2023-2024	
	₹ in Lakhs	% of total sale of Khandsari Sugar	₹ in Lakhs	% of total sale of Khandsari Sugar	₹ in Lakhs	% of total sale of Khandsari Sugar
Maharashtra	85.21	100.00	NA	NA	NA	NA
Total	**85.21**	**100.00**	**NA**	**NA**	**NA**	**NA**

c) **Geography-wise details of the Jaggery-based pre-mix products sold for the last 3 financial years are provided hereunder**:

State	FY 2025-2026		FY 2024-2025		FY 2023-2024	
	₹ in Lakhs	% of total sale of FMCG Jaggery-based pre-mix products	₹ in Lakhs	% of total sale of FMCG Jaggery-based pre-mix products	₹ in Lakhs	% of total sale of FMCG Jaggery-based pre-mix products
Maharashtra	92.89	97.44	439.65	100.00	NA	NA
Kerala	2.44	2.56	0.00	0.00	NA	NA
Total	**95.33**	**100.00**	**439.65**	**100.00**	**NA**	**NA**

d) **Geography-wise details of the Cane Seeds sold for the last 3 financial years are provided hereunder**:

State	FY 2025-2026		FY 2024-2025		FY 2023-2024	
	₹ in Lakhs	% of total sale of Cane Seeds	₹ in Lakhs	% of total sale of Cane Seeds	₹ in Lakhs	% of total sale of Cane Seeds
Maharashtra	566.34	100.00	NA	NA	NA	NA
Total	**566.34**	**100.00**	**NA**	**NA**	**NA**	**NA**

e) Geography-wise details of the By Products sold for the last 3 financial years are provided hereunder:

State	FY 2025-2026		FY 2024-2025		FY 2023-2024	
	₹ in Lakhs	% of total sale of By Products	₹ in Lakhs	% of total sale of By Products	₹ in Lakhs	% of total sale of By Products
Maharashtra	286.11	100.00	337.65	100.00	328.06	100.00
Total	**286.11**	**100.00**	**337.65**	**100.00**	**328.06**	**100.00**

Due to the geographic concentration of the sale of our products in Maharashtra, Madhya Pradesh, Assam and Uttar Pradesh, our operations are susceptible to local and regional factors, such as economic, natural disasters, demographic changes and other unforeseen events and circumstances. Consequently, any significant social, political or economic disruption or natural calamities or civil disruptions in these regions or changes in policies of the state or local governments or the government of India or adverse developments related to competition in these regions, may adversely affect our business, results of operations, financial condition and cash flows.

While we have not experienced any of the above risks that had an adverse impact on our business operations and financial conditions in the last three Financial Years, we cannot assure you that these risks will not arise in the future.

For further *details in relation to Company's revenue from operations from various States of India, see the sub-head 'Geographical Sales' under the head 'Sales mix and Geographical presence' under the Chapter titled "Our Business" on page no.163 of this Draft Red Herring Prospectus.*

3. Our revenues have been significantly dependent on few customers and our inability to maintain such business may have an adverse effect on our results of operations.

The sales of our products is concentrated with few customers. The following table sets forth our revenue from the said customers in the periods indicated:

a) In respect of Jaggery Powder, top ten customers of our Company for the last 3 financial years are provided hereunder:

Category of customers	FY 2025-2026		FY 2024-2025		FY 2023-2024	
	₹ in Lakhs	% of total sale of Jaggery Powder	₹ in Lakhs	% of total sale of Jaggery Powder	₹ in Lakhs	% of total sale of Jaggery Powder
Top 5 Customers	4792.24	73.80	4896.59	96.40	2596.44	78.69
Top 10 Customers	5976.75	92.04	5056.31	99.55	3299.58	100.00

b) In respect of Khandsari Sugar, top ten customers of our Company for the last 3 financial years are provided hereunder:

Category of customers	FY 2025-2026		FY 2024-2025		FY 2023-2024	
	₹ in Lakhs	% of total sale of Khandsari Sugar	₹ in Lakhs	% of total sale of Khandsari Sugar	₹ in Lakhs	% of total sale of Khandsari Sugar
Top 5 Customers	85.21	100.00	NA	NA	NA	NA

(The rest of the page is intentionally left blank)

c) In respect of Jaggery-based pre-mix products, top ten customers of our Company for the last 3 financial years are provided hereunder:

Category of customers	FY 2025-2026		FY 2024-2025		FY 2023-2024	
	₹ in Lakhs	% of total sale of FMCG Jaggery-based pre-mix products	₹ in Lakhs	% of total sale of FMCG Jaggery-based pre-mix products	₹ in Lakhs	% of total sale of FMCG Jaggery-based pre-mix products
Top 5 Customers	81.05	85.02	439.55	99.98	NA	NA
Top 10 Customers	90.76	95.21	439.65	100.00	NA	NA

d) In respect of Cane seeds, top ten customers of our Company for the last 3 financial years are provided hereunder:

Category of customers	FY 2025-2026		FY 2024-2025		FY 2023-2024	
	₹ in Lakhs	% of total sale of Cane Seeds	₹ in Lakhs	% of total sale of Cane Seeds	₹ in Lakhs	% of total sale of Cane Seeds
Top 5 Customers	41.37	7.30	NA	NA	NA	NA
Top 10 Customers	72.45	12.79	NA	NA	NA	NA

e) In respect of By Products, top ten customers of our Company for the last 3 financial years are provided hereunder:

Category of customers	FY 2025-2026		FY 2024-2025		FY 2023-2024	
	₹ in Lakhs	% of total sale of By Products	₹ in Lakhs	% of total sale of By Products	₹ in Lakhs	% of total sale of By Products
Top 5 Customers	212.75	74.36	301.41	89.27	297.23	90.60
Top 10 Customers	265.00	92.62	327.74	97.06	325.34	99.17

Our Company is engaged in business of Manufacturing of "Jaggery Powder", "Khandsari Sugar", "Jaggery-based pre-mix products" "Cane seeds" and "By-Prodcuts". Few clients may represent a larger part of our customer portfolio, increasing the potential volatility of our results. We cannot assure you that we shall generate the same quantum of business, or any business at all and the loss of business from one or more of them may adversely affect our revenues and results of operations. However, the composition and revenue generated from these customers might change as we continue to add new customers in the normal course of business. While we believe that we shall not face challenges in finding new customers in the ordinary course of business, our results of operations and financial condition may be adversely affected if we remain dependent on few customers.

While we have not experienced any of the above risks that had an adverse impact on our business operations and financial conditions in the last three Financial Years, we cannot assure you that these risks will not arise in the future.

For further details in relation to revenue from customers kindly refer to the head "Details of Top Ten clients" in the Chapter titled 'Our Business' on page no. 164 of this Draft Red Herring Prospectus.

4. Our manufacturing operations are seasonal in nature and any adverse change in sugarcane harvesting season may adversely affect our manufacturing setup including the number of days that our factory would be operational, which would adversely affect our total production, our business, results of operations, financial condition and cash flows.

Our manufacturing operations are dependent upon the availability of sugarcane and are seasonal in nature. The sugarcane crushing season generally commences during October-November and continues until April-May, subject to climatic conditions, sugarcane availability, rainfall patterns, crop maturity and other agricultural factors. During the crushing season, harvested sugarcane is processed to manufacture our products. As sugarcane begins

losing sugar content shortly after harvesting, timely availability and processing of sugarcane is critical to our operations.

Any delay in commencement of the crushing season, reduction in the duration of the crushing season, lower sugarcane availability, adverse weather conditions, inadequate rainfall, water scarcity, pest infestations, crop diseases, changes in cropping patterns or any other factors affecting sugarcane cultivation may adversely impact the quantity and quality of sugarcane available for processing. Such factors may result in reduced crushing season which would reduce the number of days that are factory would be operational and may adversely affect our total production, our business, results of operations, financial condition and cash flows.
The table showcasing the number of days factory was operational during the last three financial year is provided below:

FY	Period		No. of Days Operational
FY 2023-2024	15-10-2023	09-03-2024	146
FY 2024-2025	03-11-2024	13-02-2025	102
FY 2025-2026	03-11-2025	03-03-2026	120

Please find below the details of the installed capacity and its utilization:

(in MT)

Particulars	FY 2023-24			FY 2024-25			FY 2025-26		
	Installed Capacity	Utilised Capacity	Utilised %	Installed Capacity	Utilised Capacity	Utilised %	Installed Capacity	Utilised Capacity	Utilised %
Crushing Capacity	1,82,500.00	1,69,326.63	92.78	1,27,500.00	1,06,893.44	83.84	1,50,000.00	1,40,298.62	93.53
Jaggery Powder	29,200.00	23,701.00	81.17	20,400.00	17,778.93	87.15	24,000.00	22,582.64	94.09
Khandsari Sugar	NA	NA	NA	NA	NA	NA	7722.00	620.00	08.03

As can be seen from the above table our company has experienced fluctuations in the number of days that our factory was operational during the last three financial years, which led to fluctuation in total production of Jaggery Powder and Khandsari Sugar, we cannot assure you that these risks will not arise in the future.

For further details in relation to the "seasonal nature of our operations" and "our capacity buildup", kindly refer to the head tilted "Seasonal Nature of Operations" and head titled "our capacity and capacity utilization" in the Chapter titled 'Our Business' on page no.148 and 176 of this Draft Red Herring Prospectus.

5. Our manufacturing operations are seasonal in nature and any adverse change in the duration, timing or availability of sugarcane during the crushing season may adversely affect our business, results of operations, financial condition and cash flows.

Our manufacturing operations are dependent upon the availability of sugarcane and are seasonal in nature. The sugarcane crushing season generally commences during October-November and continues until April-May, subject to climatic conditions, sugarcane availability, rainfall patterns, crop maturity and other agricultural factors. During the crushing season, harvested sugarcane is processed to manufacture our products. As sugarcane begins losing sugar content shortly after harvesting, timely availability and processing of sugarcane is critical to our operations.

Any delay in commencement of the crushing season, reduction in the duration of the crushing season, lower sugarcane availability, adverse weather conditions, inadequate rainfall, water scarcity, pest infestations, crop diseases, changes in cropping patterns or any other factors affecting sugarcane cultivation may adversely impact the quantity and quality of sugarcane available for processing. Such factors may result in lower production levels, reduced operational efficiencies, lower sugar recovery rates and may adversely affect our business, results of operations, financial condition and cash flows.

Further, our operating results may fluctuate from period to period due to the seasonal nature of our business. A substantial portion of our manufacturing activities are undertaken during the crushing season and, accordingly, our revenues, profitability, production levels, working capital requirements and cash flows may vary significantly across reporting periods. As a result, the results of one reporting period may not be directly comparable with those of any preceding, succeeding or corresponding reporting period.

During periods when crushing operations are not undertaken, we may continue to incur various fixed and operating expenses, including employee costs, maintenance expenses, administrative expenses and other overhead costs, which may not reduce proportionately with the decline in production levels. Any inability to efficiently manage such costs during off-season periods may adversely affect our profitability and financial performance.

While we have not experienced any of the above risks that had an adverse impact on our business operations and financial conditions in the last three Financial Years, we cannot assure you that these risks will not arise in the future.

For further details in relation to the "seasonal nature of our operations" and "our capacity buildup", kindly refer to the head tilted "Seasonal Nature of Operations" and head titled "our capacity and capacity utilization" in the Chapter titled 'Our Business' on page no. 148 and 176 of this Draft Red Herring Prospectus.

6. **In Financial Years 2025-2026, 2024-2025 and 2023-2024, Purchase of Raw material i.e., Sugarcane accounted for 49.01%, 45.61% & 139.63%, of our revenue from operations, respectively. Inadequate or interrupted supply and price fluctuation of raw material could adversely affect our business, results of operations, cash flow and financial condition.**

The primary raw material for our business is Sugarcane. Sugarcane is subject to price volatility and unavailability caused by external conditions, such as commodity price fluctuations within India and globally, weather conditions, supply and demand dynamics, logistics, our bargaining power with the suppliers, inflation and governmental regulations and policies.

The following table sets forth information w.r.t. purchase of Sugarcane during the periods indicated:

Raw Material	FY 2025-2026		FY 2024-2025		FY 2023-2024	
	₹ in Lakhs	% of Revenue from operations	₹ in Lakhs	% of Revenue from operations	₹ in Lakhs	% of Revenue from operations
Sugarcane	3,689.12	49.01	2,671.08	45.61	5,065.12	139.63

The absence of any long-term supply arrangements with our suppliers/farmers exposes us to the price volatility of raw material. Unexpected increase in the price of the raw material may adversely affect our business, results of operations, financial condition and cash flow. In addition, we do not have a formal hedging policy and do not undertake hedging on any commodity futures platform. If we are unable to manage these costs or to increase the prices of our products to offset these increased costs, our business, results of operations, financial condition and cash flows may be adversely affected.

The sugarcane is a seasonal crop. Primarily the sugarcane crop is grown as a long-duration crop, planted during the spring (February-April) and/or autumn (September-October) seasons and harvested after 10 to 18 months, depending on the variety and climatic conditions. It is a highly versatile and adaptable crop, but its cultivation is tied to specific seasonal conditions, particularly water availability, rainfall and temperature, making it a seasonal crop globally, not just in India. The primary impact of seasons on the business is pricing in relation to the procurement of the sugarcane, which may have an adverse effect on our business, results of operations, financial condition and cash flows.

While we have not experienced any of the above risks that had an adverse impact on our business operations and financial conditions in the last three Financial Years, we cannot assure you that these risks will not arise in the future.

For further details in relation to raw material consumed kindly refer to the head "Raw Materials" in the Chapter titled 'Our Business' on page no. 165 of this Draft Red Herring Prospectus.

7. **We are dependent on harvesting and transportation contractors for the timely harvesting and delivery of sugarcane to our manufacturing facility. Any disruption in harvesting and transportation services may adversely affect our business, results of operations, financial condition and cash flows.**

Our Company procures its primary raw material, sugarcane, directly from farmers located in the vicinity of our manufacturing facility. Prior to each crushing season, we enter into seasonal arrangements with harvesting and transportation contractors for harvesting of sugarcane and transportation of the harvested crop to our factory premises. Accordingly, our ability to procure sugarcane in a timely manner is dependent upon the availability and performance of such harvesting and transportation contractors.

Sugarcane begins losing its sugar content shortly after harvesting and therefore requires timely harvesting and transportation to ensure optimum recovery and efficient production. Any delay, interruption or disruption in

harvesting and transportation activities due to shortage of labour, non-availability of transportation vehicles, disputes with contractors, strikes, accidents, adverse weather conditions, fuel shortages, increase in transportation costs, regulatory restrictions or any other unforeseen circumstances may adversely affect the timely procurement of sugarcane and impact our manufacturing operations.

The data relating to expenses incurred by our company on procurement of raw material for the last 3 financial years are provided hereunder:

Expense	FY 2025-2026		FY 2024-2025		FY 2023-2024	
	₹ in Lakhs	% of Revenue from operations	₹ in Lakhs	% of Revenue from operations	₹ in Lakhs	% of Revenue from operations
Harvesting and Transportation (H &T) Expense	1,447.76	19.23	867.72	14.82	1,568.45	43.24

Further, we cannot assure you that harvesting and transportation contractors will continue to provide their services on commercially acceptable terms or at all. Any significant increase in harvesting and transportation charges may increase our procurement costs, which we may not be able to pass on to our customers. In addition, any inability to engage adequate harvesting and transportation contractors during the crushing season may result in interruption in the supply of sugarcane, lower sugar recovery, reduced production levels and delays in meeting our operational requirements.

Further, a substantial portion of the sugarcane supplied to our manufacturing facility is sourced from rural and village areas where transportation infrastructure may be limited. Any deterioration in road connectivity, transportation networks, communication systems or other public infrastructure may disrupt the movement of sugarcane to our factory premises and adversely affect our operations. Any such disruption in harvesting and transportation services may have a material adverse effect on our business, results of operations, financial condition and cash flows.

While we have not experienced any of the above risks that had an adverse impact on our business operations and financial conditions in the last three Financial Years, we cannot assure you that these risks will not arise in the future.

For further details in relation to procurement of raw materials and harvesting and transportation arrangements, kindly refer to the head "Raw Materials" in the chapter titled 'Our Business' on page no. 165 of this Draft Red Herring Prospectus.

8. Our Company had negative cash flows from its Operating Activities, Investing Activities and Financing Activities in the past years, details of which are given below. Sustained negative cash flow may adversely affect our business, results of operations, financial condition and growth.

Our Company had negative cash flows from its Operating Activities, Investing Activities and Financing activities in the previous year(s) as per the Restated Financial Statements and the same are summarized as under:

₹ in Lakhs

Particulars	For the Financial Years ended March 31,		
	2026	2025	2024
Net cash (used in)/ Generated from operating activities	504.19	1,324.17	(1,778.64)
Net cash (used in)/ Generated from investing activities	(1,020.11)	(64.47)	(2,063.02)
Net cash (used in)/ Generated from finance activities	533.83	(1,171.21)	3,687.22

Cash flow of a company is a key indicator to show the extent of cash generated from operations to meet capital expenditure, pay dividends, repay loans and make new investments without raising finance from external resources. If we are not able to generate sufficient cash flows in future, it may adversely affect our business, results of operations, financial condition and growth.

For further details in relation to the cashflow, see Annexure III titled "Restated Statement of Cashflow" under Chapter titled 'Restated Financial Information' beginning on page no. 232 of this Draft Red Herring Prospectus.

9. Instances of delayed compliances, discrepancies and non-compliances in ROC filings may result in penalties and adversely affect our business, financial condition and reputation.

In the past, our Company has experienced **(a)** Non-compliances with respect to provisions of Section 62(1)(c) of the Companies Act, 2013 and Rule 13(2) of the Companies (Share Capital and Debentures) Rules, 2014 **(b)** certain delays in filings with Registrar of Companies ("ROC") and **(c)** certain discrepancies in filings with Registrar of Companies ("ROC"); the details of which are set out below:

a. Non-compliances with respect to provisions of Section 62(1)(c) of the Companies Act, 2013 and Rule 13(2) of the Companies (Share Capital and Debentures) Rules, 2014:

The Board of Directors of our Company at their meeting held on March 13, 2024 approved the proposal to issue and allot up to 4,80,000 Equity Shares of ₹ 100/- each at par for cash aggregating up to ₹ 4,80,00,000/- in one or more tranche on a Private Placement basis to the Existing Equity Shareholders (identified investors) of our Company on private placement under the provisions of 42, 62(1)(c) and 179(3)(c) of the Companies Act, 2013 read with the Companies (Prospectus and Allotment of Securities) Rules, 2014 and the Companies (Share Capital and Debentures) Rules, 2014. The same was subsequently approved by the shareholders at the Extraordinary General Meeting held on March 19, 2024, vide passing of Special Resolution.

Subsequently, the Private Placement Offer-cum-Application Letter in Form PAS-4 was issued to the identified investors on March 22, 2024, and the record of the Private Placement Offer was maintained in Form PAS-5. Thereafter the identified shareholders applied to the said offer and deposited the requisite application money in a separate bank account maintained by our company in this regard.

Thereafter, the Board of Directors, at its meeting held on March 22, 2024, approved the allotment of 4,80,000 Equity Shares of ₹100/- each at par for cash aggregating to ₹ 4,80,00,000/-.

However, our Company did not obtain a valuation report as required under Section 62(1)(c) of the Companies Act, 2013. Further, our Company did not include all the particulars required to be disclosed in the explanatory statement annexed to the notice convening the extraordinary general meeting, as prescribed under Rule 13(2) of the Companies (Share Capital and Debentures) Rules, 2014.

Pursuant to the aforesaid non-compliances read with section 450 of Companies Act, 2013, our Company and every officer of our Company who is in default may be liable to penalties ₹10,000 and, in the case of a continuing contravention, a further penalty of ₹1,000 for each day after the first during which such contravention continues, subject to a maximum penalty of ₹200,000 in the case of the Company and ₹50,000 in the case of each officer in default.

In this regard, pursuant to Section 454 of the Companies Act, 2013, our Company has filed e-Form GNL-1 (vide SRN: AC3898178) on June 12, 2026, before the Office of the Registrar of Companies, Nagpur, seeking adjudication of penalties, in respect of the aforesaid contraventions relating to Section 62(1)(c) of the Companies Act, 2013 and Rule 13(2) of the Companies (Share Capital and Debentures) Rules, 2014.

As of the date of this Draft Red Herring Prospectus, the adjudication proceedings are pending, and our Company is awaiting a hearing order from the competent authority.

Further, as our business continues to grow, there can be no assurance that similar inadvertent instances of non-compliance with applicable statutory or regulatory requirements will not occur in the future. Any such non-compliances may expose our Company to regulatory scrutiny, adjudication proceedings, monetary penalties or other actions, which could adversely affect our business, reputation, operations, financial condition and future prospects.

For further details in relation to the aforesaid private placement, see sub-head tilted "History of Issued, Subscribed and Paid-up Equity Share Capital of our Company" under head titled "Notes to Capital Structure" in the chapter titled "Capital Structure" beginning on page no. 80 of this Draft Red Herring Prospectus.

b. Certain delays in filings with Registrar of Companies ("ROC")

Our Company has, in the past, experienced certain delays in filing certain e-forms and returns with the Registrar of Companies. Such delays were primarily attributable to operational and technical challenges encountered by our Company. All such e-forms and statutory returns have since been duly filed on the MCA portal along with the applicable filing fees and additional fees, wherever required.

As of the date of this Draft Red Herring Prospectus, no penalties, adjudication orders or other regulatory actions have been initiated or imposed on our Company, its Directors or its Key Managerial Personnel in connection with such delayed filings. However, there can be no assurance that the relevant regulatory authorities will not take cognizance of such delays or initiate proceedings in the future. In the event any such proceedings are initiated or any penalties or other regulatory actions are imposed, our Company, its Directors, Key Managerial Personnel and any officer(s) who may be held to be in default could be subject to penalties or other consequences under applicable law, which may have an adverse effect on our financial condition.

Further, as our business continues to expand, there can be no assurance that similar inadvertent delays in complying with statutory filing requirements will not occur in the future. Any such delays may expose our Company and its officers to regulatory scrutiny, adjudication proceedings, monetary penalties or other actions under applicable laws, which could adversely affect our business, financial condition, results of operations, cash flows, reputation and future prospects.

c. Certain discrepancies in filings with Registrar of Companies ("ROC")

There have been certain discrepancies and/or typographical and/or clerical errors by our Company while filing certain ROC Forms. As of the date of this Draft Red Herring Prospectus, no penalties, adjudication orders or other regulatory actions have been initiated or imposed on our Company, its Directors or its Key Managerial Personnel in connection with the said discrepancies/errors. However, there can be no assurance that the relevant regulatory authorities will not take cognizance of such discrepancies/errors or initiate proceedings in the future. In the event any such proceedings are initiated or any penalties or other regulatory actions are imposed, our Company, its Directors, Key Managerial Personnel and any officer(s) who may be held to be in default could be subject to penalties or other consequences under applicable law, which may have an adverse effect on our financial condition.

Further, as our business continues to expand, there can be no assurance that similar discrepancies/errors in complying with statutory filing requirements will not occur in the future. Any such delays may expose our Company and its officers to regulatory scrutiny, adjudication proceedings, monetary penalties or other actions under applicable laws, which could adversely affect our business, financial condition, results of operations, cash flows, reputation and future prospects.

10. There are outstanding legal proceedings involving our Company, Promoters and Group Companies. Any adverse decision in such proceedings may have a material adverse effect on our business, results of operations and financial condition.

We are involved in certain legal proceedings which are pending at different levels of adjudication before various tribunals, enquiry officers, and appellate authorities. We cannot provide assurance that these legal proceedings will be decided in our favour. Any adverse decisions in any of the proceedings may have a significant adverse effect on our business, results of operations, cash flows and financial condition. A summary of the proceedings involving our Company, Promoters, Directors, Key Managerial Personnel, Senior Managerial Personnel, group Companies and Subsidiary Companies are provided below

Name of Entity	Criminal Proceeding	Tax Proceedings	Statutory or Regulatory Proceeding	Disciplinary action by the SEBI or Stock Exchanges against our Promoter	*Material Civil Litigation	Aggregate amount involved (in ₹ Lakhs)
Company						
Against the Company	Nil	6	Nil	N.A.	Nil	28.33#
By the Company	Nil	Nil	Nil	N.A.	Nil	Nil
Promoter						
Against the Promoter	Nil	8	Nil	Nil	Nil	10.64#
By the Promoter	Nil	Nil	Nil	Nil	Nil	Nil
Directors (Other than Promoter)						
Against the Director	Nil	Nil	Nil	N.A.	Nil	Nil
By the Director	Nil	Nil	Nil	N.A.	Nil	Nil
KMP & SMP (Other than Promoter)						
Against the KMP & SMP	Nil	N.A.	Nil	N.A.	Nil	Nil
By the KMP & SMP	Nil	N.A.	Nil	N.A.	Nil	Nil
Group Companies						
Against the Group Companies	Nil	5	Nil	N.A.	Nil	308.17
By the Group Companies	8	Nil	Nil	N.A.	Nil	59.14
Subsidiary Companies						
Against the Subsidiary Companies	N.A.	N.A.	N.A.	N.A.	N.A.	N.A.
By the Subsidiary Companies	N.A.	N.A.	N.A.	N.A.	N.A.	N.A.

**As per the Materiality Policy on litigation of ourCompany*
#Amount quantifiable to the extent

There can be no assurance that these litigations will be decided in favour Company, Promoters and Group Companies. Consequently, it may divert the attention of our Promoters & Directors and use our Company's resources and accordingly, we may incur significant expenses in such proceedings. The said proceedings may also require us to make provisions in our financial statements, which could increase our expenses and liabilities. If such claims are determined against us, there could be a material adverse effect on our reputation, business, financial condition and results of operations. Further, in addition to that, there could be other litigations & claims filed against Our Company, Promoters, Directors, Key Managerial Personnels, Senior Managerial Personnel, Group Companies and Subsidiary Companies which our Company may not be aware of as on the date of this Draft Red Herring Prospectus.

For further details of legal proceedings, see chapter titled "Outstanding Litigation and Material Developments" beginning on page no. 283 of this Draft Red Herring Prospectus.

11. Mr. Dattatray Kashinath Kulkarni, Promoter/Executive Director/CFO of our company, was previously associated with Kalyansagar Agro & Milk Products Private Limited as a Director. The said Company was Struck-off by ROC, Pune and he was disqualified as a Director for a period of five Years.

Mr. Dattatray Kashinath Kulkarni, Promoter/Executive Director/CFO of our company, was previously associated with Kalyansagar Agro & Milk Products Private Limited as a Director. The said Company was Struck-off by ROC, Pune under section 248 (1) of the Companies Act, 2013, vide public notice no. ROCP/STK/2017/7120 dated April 07, 2017.

Pursuant to the above Strick off, the status of DIN of Mr. Dattatray Kashinath Kulkarni was disqualified from November 01, 2016, to October 31, 2021. However, on the date of appointment of Mr. Dattatray Kashinath Kulkarni (June 24, 2022) the said disqualification was no longer applicable.

The association of our Director with a company that has been struck off and disqualification of his DIN, may be perceived adversely by certain investors, customers, lenders, business partners or other stakeholders. Any such adverse perception may affect the reputation of our Company and could have an adverse effect on our business, financial condition, results of operations and cash flows.

For further details in relation to the above, kindly refer head titled " Name of any of the Promoter appearing in the list of Directors of Struck-Off Companies By ROC/ MCA " in the chapter titled "Our Promoter and Promoter Group" and "Name of any of the Directors appearing in the list of Directors of Struck-off Companies by ROC/ MCA" in the chapter titled "Our Management" on page no. 221 and 207 respectively of this Draft Red Herring Prospectus.

12. We have not yet placed orders in relation to the proposed capital expenditure. In the event of any delay in placing the orders, or in the event the vendors are not able to execute the contract in a timely manner, or at all, may result in time and cost over-runs and our business, prospects and results of operations may be adversely affected.

We are yet to place orders for the proposed capital expenditure. We have not entered into any definitive contract to utilize Net Proceeds for this object of the Issue. Additionally, in the event of any delay in placement of such orders, the proposed schedule of implementation and deployment of the Net Proceeds may be extended or may vary accordingly. We cannot assure you that we will be able to undertake such capital expenditure within the cost indicated by such quotations or that there will not be cost escalations. Our proposed expansion may be subject to potential problems and uncertainties including cost overruns or delays. Neither there can be assurance that we will be able to complete the aforementioned proposed expansion in accordance with the proposed schedule of implementation nor can there be no assurance that our budgeted costs may be sufficient to meet our proposed capital expenditure requirements, which in turn may materially and adversely affect our financial condition, results of operations, cash flows, and prospects

For details relating to quotation relating to proposed expansion, see sub-head titled "Capital Expenditures" under the head titled "Details of the Objects of the Issue" under Chapter titled "Object of the Issue" on beginning on page no. 97 of this Draft Red Herring Prospectus.

(The rest of the page is intentionally left blank)

13. In the Past there have been delays in filing the ESIC, MLWF, GST, PF, TDS and PT Returns by our Company:

Our Company has in the past inadvertently delayed the filings of GST, MLWF, TDS, PF, ESIC and PT Return, the details of the same are provided herein below:

Delay in the filling related to ESIC:

Sr. No	Challan Period	Total Contribution	Due Date	Challan Date	No. of delay
1	Mar-26	11,791.00	15-04-2026	26-06-2026	72

Delay in the filling related to Maharashtra Labour Welfare Fund (MLWF):

Sr. No	Challan Period	Total Contribution	Due Date	Challan Date	No. of delay
1	Jan-24 to June-24	14,100.00	15-07-2024	22-01-2025	191
2	July-24 to Dec-24	18,000.00	15-01-2025	22-01-2025	7
3	Jan-25 to June-25	13,100.00	15-07-2025	30-07-2025	15
4	July-25 to Dec-25	13,100.00	15-01-2026	31-01-2026	15

Delay in the filing related to GST:

Particulars	GSTR	Due date of filling return	Date of filling return	No. of delays
FY 2025-26				
Apr-25	GSTR 1	11-05-2025	17-05-2025	6
May-25	GSTR 1	11-06-2025	16-06-2026	5
Aug-25	GSTR 1	11-09-2025	15-09-2025	4
Dec-25	GSTR 1	11-01-2026	29-01-2026	18
Jan-26	GSTR 1	11-02-2026	18-02-2026	7
Feb-26	GSTR 1	11-03-2026	21-03-2026	10
Mar-26	GSTR 1	11-04-2026	06-05-2026	25
FY 2024-25				
Feb-25	GSTR 1	11-03-2025	28-03-2025	17
Mar-25	GSTR 1	11-04-2025	12-04-2025	1
FY 2023-24				
Q1	GSTR 1	13-07-2023	24-08-2023	42
Q2	GSTR 1	13-10-2023	16-11-2023	34
Q3	GSTR 1	13-01-2024	22-01-2024	9
Jan-24	GSTR 1	11-02-2024	28-02-2024	17
FY 2025-26				
Apr-25	GSTR 3B	20-05-2025	22-05-2025	2
Jul-25	GSTR 3B	20-08-2025	23-08-2025	3
Sep-25	GSTR 3B	25-10-2025	30-10-2025	5
Dec-25	GSTR 3B	20-01-2026	29-01-2026	9
Feb-26	GSTR 3B	20-03-2026	21-03-2026	1
Mar-26	GSTR 3B	21-04-2026	07-05-2026	16
FY 2024-25				
Feb-25	GSTR 3B	20-03-2025	28-03-2025	8
FY 2023-24				
Q1	GSTR 3B	22-07-2023	24-08-2023	33
Q2	GSTR 3B	22-10-2023	16-11-2023	25
Jan-24	GSTR 3B	20-02-2024	28-02-2024	8

(The rest of the page is intentionally left blank)

Delay in the filling related to PF:

Month	Due Date	Filling Date	No. of days delay
July-23	15-08-2023	31-08-2023	16
Nov-23	15-12-2023	16-12-2023	1
Nov-25	15-12-2025	25-12-2025	10
Dec-25	15-01-2026	26-02-2026	42
Jan-26	15-02-2026	19-02-2026	4

Delay in the return filing related to TDS/TCS:

Particulars	Due date of filling	Actual Date of filling	No of Days delay filed
FY 2025-26 Q 2 (Form 26Q)	31-10-2025	04-11-2025	4
FY 2024-25 Q 4 (Form 26Q)	31-05-2025	16-06-2025	16
FY 2023-24 Q 1 (Form 26Q)	31-05-2023	Not Filed	Not Filed
FY 2023-24 Q 2 (Form 26Q)	31-10-2023	Not Filed	Not Filed
FY 2025-26 Q 2 (Form 24Q)	31-10-2025	04-11-2025	4
FY 2024-25 Q 4 (Form 27EQ)	15-05-2025	30-07-2025	76
FY 2023-24 Q 4 (Form 27EQ)	15-05-2024	31-05-2024	16

Delay in Filling related to PT:

Year/Month*	Due Date	Actual Date	No of days delay
FY 2023-24	31-03-2024	21-01-2025	296
April-25	31-05-2025	17-03-2026	290
May-25	30-06-2025	17-03-2026	260
June-25	31-07-2025	17-03-2026	229
July-25	31-08-2025	17-03-2026	198
Aug-25	30-09-2025	17-03-2026	168
Sep-25	31-10-2025	17-03-2026	137
Oct-25	30-11-2025	17-03-2026	107
Nov-25	31-12-2025	17-03-2026	76
Dec-25	31-01-2026	17-03-2026	45
Jan-26	28-02-2026	17-03-2026	17

** Note: For FY 2023–24, Annual PTRC Returns were applicable, whereas for FY 2025–26, Monthly PTRC Returns were applicable. Accordingly, the number of days of delay has been computed based on the respective applicable due dates.*

While we have paid the requisite late fees, we cannot assure you that such delayed reporting will not occur in the future. Further, while there have been no regulatory proceedings or actions initiated against us in relation to the said delayed filings, we cannot assure you that the regulatory proceedings or actions will not be initiated against us in the future, or that we will not be subject to any penalty imposed by the competent regulatory authority in this respect.

Accordingly our Company has taken steps to improve the internal system relating to statutory payments / statutory filings to mitigate the technical difficulties and to ensure timely payment/filings towards ESIC, MLWF, GST, PF, TDS and PT. However, we cannot assure that our Company will not commit such inadvertent delays or defaults in future, or any penalty or fine will not be imposed by any regulatory authority in respect to the same. The happening of such an event may cause a material effect on our results of operations and financial position.

Further, our Company did not possess an Employees' State Insurance Corporation ("ESIC") registration certificate until February 2026. Subsequent to obtaining the requisite registration, our Company commenced compliance under the applicable ESIC regulations and the ESIC contributions and returns in respect of our permanent employees were filed from March 2026 onwards. However, we cannot assure you that any regulatory authority

will not take a different view regarding the applicability of ESIC provisions for any period prior to obtaining the registration certificate or in relation to permanent employees. In the event of any regulatory action, inquiry, demand, penalty or other proceeding against our Company, our business, results of operations, financial condition and cash flows may be adversely affected.

14. We have certain contingent liabilities that have been disclosed in the Restated Financial Statements, which if they materialize, may adversely affect our business, results of operations, financial condition and cash flows.

Contingent liabilities disclosed in our Restated Financial statements is detailed below:

₹ in lakhs

Particulars	As at March 31, 2026	As at March 31, 2025	As at March 31, 2024
Tax Deducted at source	20.91	6.87	0.04
Bank guarantee	0.50	-	-

If a significant portion of these liabilities materialize, it could have an adverse effect on our business, results of operations, financial condition and cash flows.

For further details in relation to the contingent liability, kindly refer Note no. 42 titled "Contingent Liabilities and Commitments" under Chapter titled 'Restated Financial Information' on page no. 260 of this Draft Red Herring Prospectus.

15. Our future capacity expansion plans relating to our manufacturing facility are subject to the risks of unanticipated delays in implementation and cost overruns.

We intend to continue making investments to expand the capacity of our manufacturing facilities to aid our growth efforts and consolidate our presence. Our company's growth trajectory hinges on deploying raised funds for capacity expansion.

Problems that could adversely affect our expansion plans include issues with procurement of equipment or machinery, delays in completion, defects in design or construction, the possibility of unanticipated future regulatory restrictions, delays in receiving governmental, statutory and other regulatory approvals and other external factors which may not be within the control of our management.

Further, we cannot assure you that the future expansions will be completed as planned or on schedule and if they are not completed in a timely manner, or at all, our budgeted costs and investments may be insufficient to meet our future capital expenditure requirements. Although we have not experienced any cost overruns in the past, we cannot assure you that we will not experience cost overruns in relation to our future manufacturing facilities.

For details relating to timeline for setting-up of the proposed expansion, see sub-head titled "Capital Expenditures" under the head titled "Details of the Objects of the Issue" under Chapter titled "Object of the Issue" on page no. 97 of this Draft Red Herring Prospectus.

16. We require certain approvals, licenses, registrations and permits for conducting our business and our inability to obtain, retain or renew them in a timely manner, or at all, may adversely affect our business, results of operations and financial condition.

In terms of applicable laws, we require various statutory and regulatory permits, licenses, registrations, certifications, consents and approvals to carry out our business and operations (cumulatively, the "Approvals"). Majority of these Approvals are granted for a limited duration and must be periodically renewed. We cannot assure you that such Approvals will be issued or granted to us in a timely manner, or at all. If we do not receive these Approvals or if we are unable to renew the Approvals in a timely manner, or at all, then our business and operations may be adversely affected.

We have certain approvals which are currently pending, and we is yet to apply for the same including certificate to operate boiler under Section 12 of Boilers Act 2025 for the FY 2026-2027 and Licence for manufacture of Khandsari under the Maharashtra Khandsari Manufacturers Licensing Order, 1979 for the FY 2026-2027. *For details, kindly refer head titled "Approvals obtained by our Company" & "Approvals or License pending to be applied" under the Chapter titled "Government and Other Approvals" on page no. 294 & 299 of the Draft Red Herring Prospectus.*

Further, since we is enhancing its capacity to manufacture there are certain license which are required to be obtained or modified at different stage of development, operation and construction phase.

For details relating to list of approvals required for the proposed expansion, kindly refer sub-head titled "Capital Expenditures" under the head titled "Details of the Objects of the Issue" under Chapter titled "Object of the Issue" on page no. 97 of this Draft Red Herring Prospectus.

Moreover, the Approvals are subject to numerous conditions and there can be no assurance that these Approvals will not be suspended or revoked in the event of non-compliance or alleged non-compliance with any terms or conditions thereof, or pursuant to any regulatory action. Suspension or revocation of the Approvals by the relevant regulatory authority, either on account of non-compliance or otherwise, would impair our Company's operations and, consequently, have an adverse effect on our business, cash flows and financial condition.

Our Company may also be liable to monetary penalties and concerned officers in default may be subject to imprisonment. Uncertainty in the applicability, interpretation or implementation of any amendment to, or change in, governing law, regulation or policy in the jurisdictions in which we operate, including by reason of an absence, or a limited body, of administrative or judicial precedent may be time consuming as well as costly for us to resolve and may impact the viability of our current business or restrict our ability to grow our business in the future. Further, if we are affected, directly or indirectly, by the application or interpretation of any provision of such laws and regulations or any related proceedings or are required to bear any costs in order to comply with such provisions or to defend such proceedings, our business and financial performance may be adversely affected.

17. We have applied for registration of various trademarks under the Trademarks Act, 1999. However, the same has not yet been registered, furthermore our Company has taken few of the Trademarks on assignment basis. Failure to get registration, continuation of assignment of our intellectual property rights may adversely affect our competitive business position, financial condition and profitability

Presently, our company has applied for registration of various trademarks including its logo, tradenames, wordmarks under the Trademarks Act, 1999 which are at different stages of approvals. Details of the same are as follows:

Sr. No	Word/ Label Mark	Application No.	Class	Registration / Application Date	Status/ Validity
1.	Shree Siddhivinayak Greentech 	7492990	29, 30, 31, 32, 35, 40 and 43	February 01, 2026	Formalities check pass
2.	Shree Siddhivinayak Greentech	7492995	29 and 35	February 01, 2026,	Formalities check pass
3.	Shree Siddhivinayak Greentech	7492996	30 and 40	February 01, 2026,	Formalities check pass
4.	Shree Siddhivinayak Greentech	7492988	31, 32 and 43	February 01, 2026,	Formalities check pass
5.	Shree Siddhivinayak	7492987	31, 32, 43	February 01, 2026	Formalities check pass
6.	Shree Siddhivinayak 	7492989	31, 32, 43	February 01, 2026	Formalities check pass
7.	Shree Siddhivinayak	7492991	29 and 35	February 01, 2026	Formalities check pass

Sr. No	Word/ Label Mark	Application No.	Class	Registration / Application Date	Status/ Validity
8.	Shree Siddhivinayak 	7492997	29 and 35	February 01, 2026	Formalities check pass
9.	Shree Siddhivinayak	7492994	30 and 40	February 01, 2026	Formalities check pass
10.	Shree Siddhivinayak 	7492998	30 and 40	February 01, 2026	Formalities check pass

Therefore, as on date we do not enjoy the statutory protections that are accorded to a registered trademark. Further, we may not be able to detect any unauthorized use or infringement or take appropriate and timely steps to enforce or protect our intellectual property, nor can we provide any assurance that any unauthorized use or infringement will not cause damage to our business prospects. Any legal proceedings pursuant to such claims, or settlements thereunder, may divert management attention and require us to pay financial compensation to such third parties, as well as compel us to change our marketing strategies or brand names of our products, which could adversely affect our business, prospects, results of operation and financial condition. In case we are unable to obtain the registration for the said trademarks in our name, our business revenues and profitability may be impacted.

Moreover, certain trademarks have been obtained by our Company by executing deed of assignment from Mrs. Dipali Dattatraya Kulkarni, Promoter of our Company for a period of five years details of the same are as follows:

Sr. No	Word/ Label Mark	Application No.	Class	Registration / Application Date	Status/ Validity
1.	#Feel Guddy	6824194	For 29, 30, 31, 32 and 35	January 26, 2025	Objected
2.	#Feel Guddy 	6824195	For 29, 30, 31, 32 and 35	January 26, 2025	Objected
3.	#Simply Sakhar	7442165	29, 30, 31, 32 and 35	January 06, 2026	Formalities check pass
4.	#Simply Sakhar 	7442166	29, 30, 31, 32 and 35	January 06, 2026	Formalities check pass

We cannot confirm that once the assignment period is over, we will be able to renew such assignment in case we are unable to do so it might affect our operations, business and profitability.

18. The Objects of the Issue for which funds are being raised, are based on our management estimates and any bank or financial institution or any independent agency has not appraised the same.

The fund requirement and deployment, as mentioned in the chapter titled "Objects of the Issue" beginning on page no. 95 of this Draft Red Herring Prospectus is based on the estimates of our management and has not been appraised by any bank or financial institution or any other independent agency. These fund requirements are based on our current business plan. We cannot assure that the current business plan will be implemented in its entirety or at all. In view of the highly competitive and dynamic nature of our business, we may have to revise our business plan from time to time and consequently revise these fund requirements as well.

Further, we cannot assure that the actual costs or schedule of implementation as stated under chapter *"Objects of the Issue"* will not vary from the estimated costs or schedule of implementation. Any such variance may be on account of one or more factors, some of which may be beyond our control. Occurrence of any such event may delay our business plans and/or may have an adverse bearing on our expected revenues and earnings.

For further details relating to fund requirement and deployment see head "Requirement of Funds" under Chapter titled "Objects of the Issue" on beginning on page no. 95 of this Draft Red Herring Prospectus.

19. Any variation in the utilization of our Net Proceeds would be subject to certain compliance requirements, including prior Shareholders' approval.

We propose to utilise the Net Proceeds towards the proposed objects of the Issue, *kindly refer the head "Proposed Schedule of Implementation and Utilisation of the Net Proceeds" under chapter titled "Objects of the Issue" on page no. 96 of this Draft Red Herring Prospectus.* We cannot determine with any certainty if we would require the Proceeds this Issue, to meet any other expenditure or fund any exigencies arising out of the competitive environment, business conditions, economic conditions or other factors beyond our control. Further, the Net Proceeds are intended to be utilised by our Company only and none of the members of our Promoter Group or Group Companies will receive any portion of the Net Proceeds. The planned use of the Net Proceeds is based on current conditions and is subject to changes in external circumstances, costs, other financial conditions or business strategies. Any variation in the planned use of the Net Proceeds will be made in compliance with Companies Act, SEBI ICDR Regulations, SEBI Listing Regulations and other applicable laws and would also require Shareholders' approval by passing a special resolution and our Promoters will be required to provide an exit opportunity to the Shareholders who do not agree to such proposal to vary the objects and may involve considerable time or cost overrun and in such an eventuality it may adversely affect our operations or business.

20. Our current/proposed manufacturing facility is located on land taken on lease and our Registered Office and warehouses are taken on lease thus for aforementioned land/properties we have only leasehold/rental rights. In the event we lose or are unable to renew such leasehold/rental rights, our business, results of operations, financial condition and cash flows may be adversely affected.

The table below provides information of land relating to our manufacturing facility, Registered Office and warehouses taken on lease by us:

Sr. No.	Details of the Property	Rights/Period	Owned/ Leased (whether a related party or not)	Contracting party related or not	Purpose Used	Area	Consideration / Lease Rental / License Fees without GST(₹)
1.A	Gat No-912, Khamaswadi, Kallam, Osmanabad, Maharashtra, 413507	Lease period: 20 Years 01-08-2022 to 31-07-2042	Lessor: Mr. Dattatraya Kashinathrao Kulkarni	Related	Factory	19,247 sq.mts	Rent: 50,000 per month Monthly rent to be increased by 10% every three years
1.B	Gat No-912, Moha Road Khamaswadi, Kalanb, Dharashiv, Maharashtra, 413507	Lease period: 60 Months 01-06-2026 to 31-05-2031	Lessor: Mr. Dattatraya Kashinathrao Kulkarni	Related		16,753 sq.mts	Rent: 1,00,000 per month

Sr. No.	Details of the Property	Rights/Period	Owned/ Leased (whether a related party or not)	Contracting party related or not	Purpose Used	Area	Consideration / Lease Rental / License Fees without GST(₹)
2	Gat No-911, Khamaswadi, Kallam, Osmanabad, Maharashtra, 413507	Lease period: 10 Years 14-11-2024 to 13-11-2034	Lessor: Mr. Dattatraya Kashinathrao Kulkarni	Related	Godown	15,100 sq. mts	Rent: 2,50,000/- per month
3	Godown No. 01, Ground Floor, M Pawar Wearhouse, Plot Number 01 & Block Number A-29, Main Road, Diksal MIDC, Diksal, Kalanb, Dharashiv 413507	Lease period: 12 Months 21-06-2026 to 20-06-2027	Lessor: M/s M Pawar Warehouse	Not Related	Godown	1,340.64 sq.mts	Rent: 60,000/- per month
4	Block Number 1 and 4, First Floor and Second Floor, Survey No 120, Plot No 4 & C.T.S. Number :5343, Sambhaji Nagar behind DIC, Osmanabad, Maharashtra, 413501	Lease period: 60 Months 01-10-2025 to 30-09-2030	Lessor: Mrs Padwal Vidya Manoj	Not Related	Registered Office	5166.68 sq. ft	Rent: 16,537 per month
5	Office No. 302, 3rd Floor, Padmja Apartment, Survey Number :45+46/3, Tanna Tower, Above Styles SPA Furniture, Erandavana, Pune - 411004	Lease period: 36 Months 01-03-2026 to 28-02-2029	Lessor: Mrs Aruna Balasaheb Patil	Not Related	Sh Sales & Outreach Office for Pre-mix Product	1,000.00 sq. ft	First Year Rent: 85,000 per month; Second Year Rent: 89,250 per month; Third Year Rent: 93,700 per month

We cannot assure you that we will be able to renew our leases on commercially acceptable terms or at all. In the event that we are required to vacate our current premises, we would be required to make alternative arrangements for our infrastructure and we cannot assure that the new arrangements will be on commercially acceptable terms. If we are required to relocate our business operations, we may suffer disruption in our operations or have to pay increased charges, which could have an adverse effect on our business, results of operations, financial condition and cash flows. If we are unable to renew these leases or relocate on commercially suitable terms, it may have an adverse effect on our business, results of operation, financial condition and cash flows. Though there have not been any such instances in the last three Financial Years, we cannot assure you that in future such instance may not arise.

For further details in relation to the property kindly refer to the head "Property" in the chapter titled 'Our Business' on page no.177 of this Draft Red Herring Prospectus.

21. Any slowdown or interruption to our manufacturing operations or under-utilization of our existing or future manufacturing facilities may have an adverse impact on our business, results of operations, financial condition and cash flows.

As of the date of this Draft Red Herring Prospectus, we operate manufacturing facility located at Dharashiv (Old name Osmanabad), Maharashtra. Details of the manufacturing facility of our Company is as under:

Sr. No.	Location	Purpose Used	Area	Capacity
1	Gat No-912, Khamaswadi, Kallam, Osmanabad, Maharashtra, 413507	Factory	36,000 sq.mts	Sugarcane crushing capacity: 1,250 TCD

Any slowdown or interruption to our manufacturing operations may have an adverse impact on our business, results of operations, financial condition and cash flow. Further, any breakdown or obsolescence in the equipment in our manufacturing facility may interrupt our manufacturing process. In addition, planned shutdowns of our manufacturing facility for maintenance, statutory inspections and testing may be required, or manufacturing facility may be shut down for capacity expansion and equipment upgrades.

While we have not experienced any malfunction of machinery that had an adverse impact on our operations in the last three Financial Years, any significant malfunction or breakdown of our machinery in the future may involve repair and maintenance costs and may cause interruptions to our manufacturing operations.

Please find below the details of the installed capacity and its utilization:

(in MT)

Particulars	FY 2023-24			FY 2024-25			FY 2025-26		
	Installed Capacity	Utilised Capacity	Utilised %	Installed Capacity	Utilised Capacity	Utilised %	Installed Capacity	Utilised Capacity	Utilised %
Crushing Capacity	1,82,500.00	1,69,326.63	92.78	1,27,500.00	1,06,893.44	83.84	1,50,000.00	1,40,298.62	93.53
Jaggery Powder	29,200.00	23,701.00	81.17	20,400.00	17,778.93	87.15	24,000.00	22,582.64	94.09
Khandsari Sugar	NA	NA	NA	NA	NA	NA	7722.00	620.00	08.03

(in Kg)

Particulars	FY 2023-24			FY 2024-25			FY 2025-26		
	Installed Capacity	Utilised Capacity	Utilised %	Installed Capacity	Utilised Capacity	Utilised %	Installed Capacity	Utilised Capacity	Utilised %
Pre-Mix	NA	NA	NA	6,900.00	552.31	08.00	3,000.00	8,101.00	27.00

Under-utilization of our existing or future manufacturing facilities may have an adverse impact on our business, results of operations, financial condition and cash flow. Capacity utilization is affected by our ability to accurately forecast customer demand, to carry out uninterrupted operations, the availability of raw materials, and industry/ market conditions. In the event there is a decline in the demand for our products, or if we face prolonged disruptions at our facility including due to interruptions in the supply of water, electricity or as a result of labor unrest, or are unable to procure sufficient raw materials, we would not be able to achieve full capacity utilization of our existing or future manufacturing facilities, resulting in operational inefficiencies which could have an adverse effect on our business, results of operations, financial condition and cash flows.

While we have not experienced any under-utilization of our manufacturing facilities in the last three Financial Years, we cannot assure you that these risks will not arise in the future.

For further details *with respect to our installed capacity and capacity utilization, kindly refer the head "Capacity and Capacity Utilization" under the Chapter titled "Our Business" on page no. 176 of this Draft Red Herring Prospectus.*

22. Our manufacturing facility is concentrated in the state of Maharashtra. Any significant social, political, economic or seasonal disruption, natural calamities or civil disruptions in said State could have an adverse effect on our business, results of operations, financial condition and cash flows.

Our manufacturing facility is in Maharashtra. *For further details with respect to our Manufacturing Facility, kindly refer the head titled "Manufacturing Facility" under the Chapter titled "Our Business" on page no. 170 of this Draft Red Herring Prospectus.*

Due to the geographic concentration of our manufacturing facilities, our operations are susceptible to local and regional factors, such as economic and weather conditions, natural disasters, political changes and other unforeseen events and circumstances. Any natural calamity or economic slowdown in Maharashtra could adversely affect, amongst others, manufacturing operations and may require us to modify our business strategy, or require us to incur significant capital expenditure or could also result in a temporary or permanent suspension of our operations. Further, any such adverse development affecting continuing operations at our manufacturing facilities could result in significant loss due to an inability to meet production schedules, which could adversely affect our business, results of operations, financial condition, cash flow and reputation within the industry.

While we have not experienced the above risks that had an adverse impact on our business operations and financial conditions in the last three Financial Years, we cannot assure you that these risks will not arise in the future.

23. An inability to comply with environmental laws and other applicable regulations in relation to our manufacturing facility may adversely affect our business, results of operations, financial condition and cash flow.

Our business operations, in particular our day-to-day manufacturing operations, are subject to a broad range of regulations and accordingly, we are required to maintain licenses under such legislations. Any violations of these laws and regulations can result in fines, penalties or litigation, which may adversely affect our business, results of operations, financial condition and cash flows. For instance, we are subject to laws and government regulations in relation to safety, health and environmental protection. These Environmental Laws and relevant regulations impose controls on air and water discharge, noise levels, storage handling, employee exposure to hazardous substances and other aspects of our manufacturing.

We cannot assure you that there will not be any such future changes in the regulatory framework, which may cause commercial and operational challenges for our Company. If we fail to meet the environmental requirements, we may be subject to administrative, civil and criminal proceedings by Government entities, as well as civil proceedings by environmental groups and other individuals, which could result in substantial fines and penalties against us as well as revocation of approvals and permits and orders that could limit or halt our operations.

While we have not experienced the above risks that had an adverse impact on our business operations and financial conditions in the last three Financial Years, we cannot assure you that these risks will not arise in the future.

24. Our Promoters were previously associated with an entity engaged in a business similar to that of our Company, which may give rise to potential conflicts of interest in the future.

Our Promoters, Mrs. Dipali Dattatraya Kulkarni and Mr. Dattatray Kashinathrao Kulkarni, were previously associated with Shree Siddhivinayak Agritech Industries Limited as Promoter Director and Chief Executive Officer, respectively. Shree Siddhivinayak Agritech Industries Limited is engaged in a line of business similar to that of our Company.

As of the date of this Draft Red Herring Prospectus, our Promoters have ceased their association with Shree Siddhivinayak Agritech Industries Limited and are not associated with it in any capacity. Accordingly, presently there no common business pursuits or identified conflicts of interest between our Company and Shree Siddhivinayak Agritech Industries Limited.

However, our Promoters may in the future, pursue business, which has industrial/business activity in similar line to that of our Company. There can be no assurance that any actual or perceived conflict of interest will not arise in the future. If any such conflict arises, it may adversely affect the decision-making of our Promoters or our Company. Our Company intends to address any such situations in accordance with the applicable provisions of law. Any failure to appropriately manage such conflicts could adversely affect our business, financial condition, results of operations and reputation.

For further details in relation to conflicts of interest, Kindly refer the head titled "Common Pursuits/ Conflict of Interest" in the chapter titled "Our Promoter and Promoter Group" on page no. 220 of this Draft Red Herring Prospectus.

25. One of our Independent Director, Mr, Brijesh Jaynarayan Didvaniya (DIN: 10192519) is associated as an Independent Director with M.V.K. Agro Food Product Limited an entity engaged in a business similar to that of our Company, which may give rise to potential conflicts of interest.

Our Independent Director, Mr, Brijesh Jaynarayan Didvaniya (DIN: 10192519), is also an Independent Director of M.V.K. Agro Food Product Limited. The said entity is engaged in the similar line of Business as that of our Company. We cannot assure that Mr. Brijesh will not favor the interests of "M.V.K. Agro Food Product Limited" over our interest.

For further details in relation to conflicts of interest, kindly refer the head titled " Interest in Similar Business/ Ventures" in the Chapter titled "Our Management " on page no. 206 of this Draft Red Herring Prospectus.

(The rest of the page is intentionally left blank)

26. In addition to normal remuneration, other benefits and reimbursement of expenses, some of our Directors (including our Promoters), Key Managerial Personnel & Senior Managerial Personnel may be interested in our Company to the extent of their shareholding, Promotion of Company, dividend entitlement and other matters as stated below.

Our Directors (including our Promoters), Key Management Personnels, Senior Managerial Personnels, may be interested in our Company to the extent (i) that they have promoted our Company; (ii) of their shareholding and the shareholding of their relatives in our Company and the dividend payable, if any and other distributions in respect of the Equity Shares held by them or their relatives; (iii) of being Directors , KMPs & SMPs of our Company and the remuneration and reimbursement of expenses payable by our Company to them; (iv) that they have provided Properties on rent/lease to our company; (v) that they provided personal guarantees for the loans availed by our Company; (vi) that they have provided collateral for the loans availed by our company; (vii) of the loans advanced by them to our Company; (viii) that our Company in the past and may in the future, undertake other business transactions in the ordinary course of business with them, or their relatives or entities in which they hold shares.

As a result, our directors (including our Promoters), will continue to exercise significant control over our Company, including being able to control the composition of our board of directors and determine decisions requiring simple or special majority voting, and our other Shareholders may be unable to affect the outcome of such voting. We cannot assure you that our directors (including our Promoters), would always exercise their rights as shareholders to the extent of their shareholding in our Company to the benefit and best interest of our Company. Our directors (including our Promoters) may take or block actions with respect to our business, which may have conflict with our best interests or the interests of other minority Shareholders, such as actions with respect to future capital raising or acquisitions.

We cannot assure you that our Directors, Key Management Personnels, Senior Managerial Personnels will always act to resolve any conflicts of interest in our favour, thereby adversely affecting our business and results of operations and prospect.

For further details in relation to the above, kindly refer the head titled "Interests of Promoters" and "Interest in property, land, construction of building and supply of machinery" in the chapter titled "Our Promoter and Promoter Group" and head titled "Interest of Our Directors", "Interest of Key Management Personnel" and "Interest of Senior Managerial Personnel" in the chapter titled "Our Management" on page no. 220, 221, 206, 214 & 216 respectively of this Draft Red Herring Prospectus.

27. We have in the past entered into related party transactions and may continue to do so in the future, which may potentially involve conflicts of interest with the equity shareholders.

In the course of last three Financial Years, we have entered into transactions with related parties including our Promoters, Directors, relatives of our Promoters/Directors, KMPs and SMPs and Entities related to such Individuals and may continue to enter in to such transactions in future.

The table below provides details of related party transactions entered by our Company during the periods indicated:

Amount (₹ in lakhs)

Sr. No.	Nature of Transaction	For the year ended		
		31 March 2026	31 March 2025	31 March 2024
1	**Rent paid**			
	Dattatray Kashinath Kulkarni (including GST)	54.60	26.36	16.40
	Dipali Dattatray Kulkarni (Vehicle rent)	7.20	1.20	-
2	**Rent Deposit**			
	Dattatray Kashinath Kulkarni	-	-	11.00
3	**Purchases**			
	Shri Siddhivinayak Petroleum	10.99	0.06	11.72
	Shree Siddhivinayak Agritech Industries Limited	-	-	340.16
4	**Sale**			
	Shree Siddhivinayak Foodtech Farmer Producer Company	-	162.00	336.00
5	**H&T Bill**			
	Dipali Dattatray Kulkarni	49.88	15.25	41.54

Sr. No.	Nature of Transaction	For the year ended		
		31 March 2026	31 March 2025	31 March 2024
	Ganesh Kamate	16.04	11.16	31.01
	Mangesh Prabhakar Kulkarni	9.66	-	-
6	**Unsecured loan taken**			
	Dattatray Kashinath Kulkarni	-	400.00	250.25
	Dipali Dattatray Kulkarni	3,183.51	1,292.37	2,960.30
	Shree Siddhivinayak Agritech Industries Limited	920.78	864.74	918.88
7	**Loans Repaid**			
	Dattatray Kashinath Kulkarni	1.15	0.50	240.00
	Dipali Dattatray Kulkarni	1,747.54	615.23	3,348.21
	Shree Siddhivinayak Agritech Industries Limited	920.78	864.74	918.88
8	**Salary**			
	Ganesh Kamate	7.39	6.18	4.82
9	**CSR expenses**			
	Shri Siddhivinayak Social Foundation	7.39	-	-
10	**Staff Advance**			
	Ganesh Kamate	(3.27)	2.49	0.30

While we believe that all such transactions have been conducted on an arm's length basis in accordance with the Companies Act and in the ordinary course of business, there can be no assurance that we could not have achieved more favourable commercial terms with other parties. Further, it is likely that we may enter into related party transactions in the future and such transactions may potentially involve conflicts of interest which may be detrimental to our Company. Further, there can be no assurance that such transactions, individually or in the aggregate, will not have an adverse effect on our financial condition and results of operations.

While we have not experienced any of the above risks that had an adverse impact on our business operations and financial conditions in the last three Financial Years, we cannot assure you that these risks will not arise in the future. *For further details on our related party transactions, kindly refer the chapter titled "Related Party Transactions" and note no. 28 titled "Statement of Related Party Transactions" under the Chapter titled "Restated Financial Statements" on page no. 264 and page no. 248 respectively of this Draft Red Herring Prospectus.*

28. Our Company has undertaken secured borrowings and inability to comply with repayment and other covenants in our financing agreements/arrangements could adversely affect our business, results of operations, financial condition and cash flows.

As of March 31, 2026, we have a total secured borrowing of ₹ 6,473.66 lakhs amounting to 71.97% of total borrowings. Terms of certain of these borrowing contain restrictive covenants, including requirements that we obtain consent from the lenders prior to undertaking certain matters including altering our capital structure, effecting any scheme of amalgamation or reconstruction, changing the management and dilution of Promoters' shareholding and creation of security. As of the date of this Draft Red Herring Prospectus, we have received requisite consent from our secured lenders in connection to the proposed Issue.

Further, in terms of security, we are required to create a mortgage or charge over our movable and immovable properties. We may also be required to furnish additional security if required by our lenders. Additionally, these Financing Agreements also require us to maintain certain financial ratios such as current ratio, debt service coverage ratio, interest coverage ratio, fixed asset coverage ratio, etc., while we are in compliance with all such ratios as prescribed as per our financing agreements, we cannot assure you that we will be able to comply with these financial or other covenants at all times or that we will be able to obtain the consent necessary to take the actions that we believe are required to operate and grow our business. Further, there have been no defaults or re-scheduling/ re-structuring in relation to borrowings availed by our Company from any banks and/or financial institutions. Further, we are susceptible to changes in interest rates and the risks arising therefrom. Certain of our financing agreements, the lenders are entitled to charge the applicable rate of interest, which is a combination of a base rate that depends upon the policies of the RBI and a contractually agreed spread.

For details with respect to the secured borrowings, see the Chapter titled "Financial Indebtedness" beginning on page no. 281 of this Draft Red Herring Prospectus.

29. Our Company has borrowings re-payable on demand and if the said funds are demanded for repayment at any point in time and our Company is not in a position to arrange for the interim funds to make such repayments or for meeting its working capital, this may have an adverse effect on our business, results of operations, financial condition and cash flows.

As on March 31, 2026, our company has borrowings to the extent of ₹ 4,604.09 lakhs amounting to 51.18% of the total borrowing. The said borrowing re-payable on demand constitutes cash credit to the extent of ₹ 2,082.38 lakhs and other loans availed from the directors to the extent of ₹ 2,521.71 lakhs. The same is availed for the purpose of meeting the working capital requirements of our Company. If the said funds are demanded for repayment at any point in time and our Company is not in a position to arrange for the interim funds to make such repayments or for meeting its working capital, this may have an adverse effect on our business, results of operations, financial condition and cash flows.

For details with respect to the loan repayable on demand, see the chapter titled "Financial Indebtedness" beginning on page no. 281 of this Draft Red Herring Prospectus.

30. Our Company has in the past taken unsecured borrowings re-payable on demand from our Directors and (a) if the said funds are demanded for repayment at any point in time and our Company is not in a position to arrange for the interim funds to make such repayments or for meeting its working capital, (b) if such unsecured loans are not made available to our company from our directors in the future; this may have an adverse effect on our business, results of operations, financial condition and cash flows.

As on March 31, 2026, our company has unsecured borrowings to the extent of ₹ 2,521.71 lakhs amounting to 28.03% of the total borrowing. (a) if the said funds are demanded for repayment at any point in time and our Company is not in a position to arrange for the interim funds to make such repayments or for meeting its working capital, (b) if such unsecured loans are not made available to our company from our directors in the future; this may have an adverse effect on our business, results of operations, financial condition and cash flows.

For details with respect to the unsecured loans, see the Chapter titled "Financial Indebtedness" beginning on page no. 281 of this Draft Red Herring Prospectus.

31. Our business is working capital intensive and insufficient cash flows or inability to borrow funds to meet our working capital requirements may materially and adversely affect our business, financial condition and results of operations.

Inspite of our best efforts for efficient management of working capital, our business activities are capital intensive and requires significant amount of working capital to carry out manufacturing activities. Our working capital requirements are primarily met through financing arrangements with various lenders. We may continue to incur additional indebtedness in the future. Our ability to meet our debt service obligations and our ability to repay our outstanding borrowings will depend primarily upon the cash flow produced by our business. There can be no assurance that we will generate sufficient revenue from our businesses to service existing or proposed borrowings. Further, at the time of approaching various financing institutions to fund our working capital requirements, the financial institutions may require us to meet certain conditions precedent. We may not be able to fulfill all or any of the conditions or agree on terms acceptable to these lender institutions, in which case they would have no obligation to provide any financing to us. The inability of our company to obtain requisite financing may adversely affect our business, financial condition and results of operations.

For details with respect to the Financial Indebtedness, see the Chapter titled "Financial Indebtedness" beginning on page no. 281 of this Draft Red Herring Prospectus.

32. Our Promoters viz Mrs. Dipali Dattatraya Kulkarni and Mr. Dattatray Kashinath Kulkarni have provided personal guarantees for loan facilities obtained by our Company and any failure or default by our Company to repay such loans in accordance with the terms and conditions of the financing documents could trigger repayment obligations on them, which may impact their ability to effectively service their role as a promoter and directors and thereby, impact our business and operations.

Our Promoters Mrs. Dipali Dattatraya Kulkarni and Mr. Dattatray Kashinath Kulkarni have provided personal guarantee towards loan facilities taken by our Company. Any default or failure by our Company to repay the loans in a timely manner, or at all could trigger repayment obligations of our Promoters in respect of such loans, which in turn, could have an impact on their ability to effectively service their role as a promoter and directors of our Company, thereby having an effect on our business, results of operation and financial condition. Furthermore, in the event that our Promoters withdraw or terminate their guarantees, our lenders for such facilities may ask for alternate guarantees, repayment of amounts outstanding under such facilities, or even terminate such facilities.

Accordingly, our business, results of operations, financial condition and prospects may be adversely affected by the revocation of the personal guarantee provided by our Promoters. Though there have not been any such instances in the last three Financial Years, we cannot assure you that in future we may not face such situation

For details with respect to the financial indebtedness, see the chapter titled "Financial Indebtedness" beginning on page no. 281 of this Draft Red Herring Prospectus.

33. Our Promoter & Director and a member of Promoter Group viz Mr. Dattatray Kashinath Kulkarni, Promoter & Director and Mr. Mukund Kashinathrao Kulkarni, member of promoter group, have provided properties as collateral for loan facilities obtained by our Company and any failure or default by our Company to repay such loans in accordance with the terms and conditions of the financing documents could trigger seizure and auction of such properties by the financial institutions which may impact Mr. Dattatray Kashinath Kulkarni ability to effectively service his role as a promoter and directors and thereby, impact our business and operations.

Our Promoter & Director and a member of Promoter Group viz Mr. Dattatray Kashinath Kulkarni, Promoter & Director and Mr. Mukund Kashinathrao Kulkarni, member of promoter group, have provided properties as collateral for loan facilities obtained by our Company. Any default or failure by our Company to repay the loans in a timely manner, or at all could trigger seizure and auction of such properties by the financial institutions which in turn, could have an impact on Mr. Dattatray Kashinath Kulkarni's ability to effectively service his role as a promoter and directors of our Company, thereby having an effect on our business, results of operation and financial condition. Furthermore, in the event that our Promoter & Director and a member of Promoter Group withdraw or terminate such collateral, our lenders for such facilities may ask for alternate properties as collateral, repayment of amounts outstanding under such facilities, or even terminate such facilities. Accordingly, our business, results of operations, financial condition and prospects may be adversely affected by the revocation of such collateral provided by our Promoter & Director and a member of Promoter Group. Though there have not been any such instances in the last three Financial Years, we cannot assure you that in future we may not face such situation

For details with respect to the financial indebtedness, see the chapter titled "Financial Indebtedness" beginning on page no. 281 of this Draft Red Herring Prospectus.

34. Our insurance coverage may not be adequate, or we may incur uninsured losses or losses more than our insurance coverage.

Our existing insurance coverage includes protection for various aspects, viz., assets like Plant, Property & Equipment (PPE), inventory and employee, insured by various types of insurance coverages like, stock burglary insurance, stock fire insurance, asset fire policy, asset burglary insurance, employee insurance policy, etc.

Notwithstanding the insurance coverage that we have undertaken, we may not be fully insured against certain business risks. We cannot assure you that any claim under the insurance policies maintained by us will be honoured fully, in part, or on time. To the extent that we suffer any loss or damage that is not covered by insurance or exceeds our insurance coverage, our business, results of operations, financial condition and cash flows could be adversely affected.

Further, while we believe that we have obtained insurance against losses that are most likely to occur in our line of business, there may be certain losses that may not be covered by our Company, which we have not ascertained as of the date. Therefore, we cannot assure you that we will continue to accurately ascertain and maintain adequate insurance policies for losses that may be incurred in the future.

Our Company has not made any claim for any insurance during the period FY 2023-2024, FY 2024-2025 and FY 2025-2026. However, in the event we are unable to succeed in our claims arising from such claims in future, our business, results of operations, financial condition and cash flows could be adversely affected.

For details with respect to the insurance, see the head "Insurance" under the Chapter titled "Our Business" beginning on page no. 180 of this Draft Red Herring Prospectus.

(The rest of the page is intentionally left blank)

35. The requirements of being a publicly listed company may strain our resources. Further non-compliance of the regulatory requirements applicable to publicly listed companies may lead to suspension of our Company.

We are not a publicly listed company and have not, historically, been subjected to the increased scrutiny of our affairs by shareholders, regulators and the public at large, that is associated with being a listed company. As a listed company, we will incur significant legal, accounting, corporate governance and other expenses that we did not incur as an unlisted company. We will be subject to the exchange Listing Regulations, which will require us to file audited annual and unaudited half-yearly reports with respect to our business and financial condition. If we experience any delays, we may fail to satisfy our reporting obligations and/or, we may not be able to readily determine and accordingly report any changes in our results of operations as promptly as other listed companies. Further, as a publicly listed company, we will need to maintain and improve the effectiveness of our disclosure controls and procedures and internal control over financial reporting, including keeping adequate records of daily transactions. In order to maintain and improve the effectiveness of our disclosure controls and procedures and internal control over financial reporting, significant resources and management attention will be required. As a result, our management's attention may be diverted from our business operations, which may adversely affect our business, prospects, results of operations, financial condition and our reputation.

36. Lack of experience of our Directors and Key Managerial Personnel in managing a Public Listed Company.

Our directors (except one of our Independent Directors who are also the Independent Directors of another Listed Company), and key managerial personnel do not have prior experience of managing a public-listed company. As a result, they may face a learning curve in understanding and complying with the ongoing obligations and regulatory requirements applicable to listed entities, including compliance of LODR, ICDR, SAST, PIT, listing agreement etc. While the directors and key managerial personnel possess relevant knowledge and operational experience, their lack of exposure to public listed Company may result in delays or missteps in implementing policies, procedures, and controls necessary for effective management and compliances of a public listed company. This may have an impact on our ability to comply with applicable laws and regulations, which may adversely affect our business, prospects, results of operations, financial condition and our reputation.

For details w.r.t. to experience of our Directors and Key Managerial Personnels, kindly refer to chapter titled "Our Management" beginning on page no. 200 of this Draft Prospectus.

37. The average cost of acquisition of Equity Shares by our Promoters could be lower than the Issue price.

Our Promoters' average cost of acquisition of Equity Shares in our Company is as follows:

Name of the Promoters	Number of Equity Shares held as on the date of this certificate	Average cost of acquisition per share (₹)
Dattatray Kashinathrao Kulkarni	26,24,875	0.19
Dipali Dattatraya Kulkarni	96,25,000	4.00

** Data as certified by Statutory Auditor, M/s. A N Gawade & Co. LLP, Chartered Accountants, by way of their certificate dated July 10,2026.*

38. Our business is manpower intensive. Our business may be adversely affected by work stoppages, increased wage demands by our employees/labour force(workforce), or an increase in minimum wages, and if we are unable to engage new workforce at commercially attractive terms.

Our operations are manpower intensive and we are dependent on our workforce for a significant portion of our operations. The success of our operations depends on the availability of and maintaining good relationships with our workforce. Shortage of skilled/unskilled personnel or disruptions caused by disagreements with workforce could have an adverse effect on our business, results of operations, financial condition and cash flows.

Disputes, strikes, work stoppages, work slow-downs or lockouts at our manufacturing facility or other problems with our workforce, may adversely affect our ability to continue our business operations. Any labour unrest directed at us could directly or indirectly prevent or hinder our normal operating activities, and, if not resolved in a timely manner, could lead to disruptions in our operations. Although we have not experienced any labour unrest / disputes / strikes / work stoppages / work slow-downs / lockouts in the last three Financial Years, we cannot assure you that we will not experience disruptions in work or our operations in the future.

Our success also depends on our ability to attract, hire, train and retain skilled personnels. An inability to recruit, train and retain suitably qualified and skilled personnel could adversely impact our business, results of operations, financial condition and cash flows. As of March 31, 2026, number of permanent employees associated with our Company were 155, all of whom are skilled employees. The unskilled employees of our company are wage workers and work on a contractual basis.

The following table sets forth the details regarding rate of attrition of our skilled employees in the periods indicated:

Particulars	FY 2025-2026	FY 2024-2025	FY 2023-2024
Attrition rate	65.59%	74.50%	18.65%

We cannot assure you that attrition rates for our employees will not increase. Further, we are subject to stringent labour laws, and any violation of these laws may lead regulators or other authorities to order a suspension of certain or all of our operations. We may need to increase compensation and other benefits either to attract and retain key personnels or due to increased wage demands by our employees, or an increase in minimum wages and that may adversely affect our business, results of operations, financial condition and cash flows.

The following table sets forth the details regarding our employee benefits expense in the periods indicated:

(₹ in lakhs)

Name of the Product	FY 2025-2026	FY 2024-2025	FY 2023-2024
Employee benefit expenses	463.55	389.08	294.03
Employee benefit expenses as a % of the revenue from operations	6.16%	6.64%	8.11%

For further details, see head "Human Resource" under the Chapter titled "Our Business" beginning on page no. 178 of this Draft Red Herring Prospectus.

39. We depend on the skills and experience of our Promoters/Directors, Key Managerial Personnel and Senior Management Personnels for our business and future growth.

We primarily benefit from the strategic guidance of our Promoters and our Directors. If their involvement in our business reduces in the future, we may be unable to implement our plans as anticipated or maintain administrative control as we currently do, which in turn could adversely affect our business, results of operations, financial condition and prospects. As our Promoters are presently also promoters/shareholders of other businesses including "Shree Siddhivinayak Foodtech Farmer Producer Company Limited" any increased focus on such business may divert their attention from our business.

Furthermore, our future performance will also depend on the continued service of our Key Managerial Personnel and Senior Management Personnels and the loss of any such employee and the inability to find an adequate replacement may adversely affect our business, results of operations, financial condition.

For details of our Promoters, our Directors, our Key Managerial Personnel and our Senior Management Personnel, see Chapter titled "Our Promoters and Promoter Group" and "Our Management" beginning on page no. 217 and 200 respectively of this Draft Red Herring Prospectus.

40. We operate in a competitive market and any increase in competition may adversely affect our business, results of operations, financial condition and cash flows.

The industry we serve is highly competitive, characterized by a mix of small and medium companies. We face intense competition from various domestic companies in India as well as from the unorganized sector. We expect competition could increase with new entrants coming into the agro processing industry, who may have more flexibility in responding to changing business and economic conditions and existing players consolidating their positions. Further, expansion in new products (Khansari sugar retails packs & new premix) will require substantial advertising and promotional expenditures and some of our competitors may have access to significantly greater resources, including the ability to spend more on advertising and marketing and hence the ability to compete more effectively. Competitors may, whether through consolidation or growth, present more credible integrated or lower cost products than we do, which may have a negative effect on our business. We cannot assure you that we can continue to compete effectively with our competitors. Our failure to compete effectively, including any delay in responding to changes in the industry and market, together with increased spending on advertising by competitors,

may affect the competitiveness of our products, which may affect our business, results of operations, financial condition and cash flows.

For details in relation to our Competition and marketing Strategies, see head titled "Marketing Strategies" & "Competition" under Chapter titled "Our Business" beginning on page no. 168 and 179 respectively of this Draft Red Herring Prospectus.

41. We may not successfully protect our technical know-how, which may result in the loss of our competitive advantage.

We have developed technical know-how relating to the manufacturing process of our products. Our technical know-how has been derived from the past experience of our key employees and management team as well as our research and development efforts. Certain proprietary knowledge may be leaked, either inadvertently or wilfully, at various stages of the manufacturing process. Certain of our employees have access to confidential product information and packaging, amongst others, and we cannot assure you that this information will remain confidential. Moreover, certain of our employees may leave us and join our various competitors. Such technical know-how cannot be protected under the Indian legal system by way of registration with competent authorities, and as a result, we have to rely on employee confidentiality undertakings, a less effective means of protection. Further, if the confidential technical information in respect of our products or business becomes available to third parties or the public, any competitive advantage we may have over our competitors could be harmed. Consequently, any leakage of confidential technical information could have an adverse effect on our business, results of operations, financial condition and cash flows.

42. Our inability to adopt new technologies to adhere to our quality product standards could adversely affect our business, results of operations, financial condition and cash flows.

Our manufacturing facilities are equipped with manufacturing processes which is equipped with process-specific automation and control systems. However, we cannot assure you that in the future, we will be able to successfully make timely and cost-effective enhancements, additions or replacements to our current technological infrastructures. Our industry is subject to technological changes with the constant introduction of new and enhanced processes, machinery and technologies. Our inability to successfully adopt and implement such technological changes may increase our costs, which may adversely affect our business, results of operations, financial condition and cash flows. Though there have not been any such instances in the last three Financial Years, we cannot assure you that in future we shall be able to successfully make timely and cost-effective adoption of technology.

For details in relation to adoption of technology, kindly refer head titled "Technology, Automation and Information Systems" under Chapter titled "Our Business" on page no. 180 of this Draft Red Herring Prospectus.

43. Technology failures could disrupt our operations and adversely affect our business, results of operations, financial condition and cash flows.

IT systems are critical to our ability to manage our manufacturing process, inventory management, financial management, data handling and supply chain management, to maximize efficiencies and optimize costs. If we do not allocate and effectively manage the resources necessary to implement and sustain the proper IT infrastructure, we could be subject to transaction errors and processing inefficiencies. Challenges relating to the revamping or implementation of new IT structures can also subject us to certain errors, inefficiencies and disruptions. Our IT systems and the systems of our third party IT service providers may also be vulnerable to a variety of interruptions due to events beyond our control, including, but not limited to, natural disasters, terrorist attacks, telecommunications failures, computer viruses, hackers and other security issues. Though there have not been any such instances in the last three Financial Years, we cannot assure you that in future we shall not face such risk.

For details in relation to adoption of technology, kindly refer head titled "Technology, Automation and Information Systems" under Chapter titled "Our Business" on page no. 180 of this Draft Red Herring Prospectus.

44. We may be subject to fraud, theft, employee negligence or similar incidents.

Our operations may be subject to incidents of theft or damage to inventory. Our industry typically encounters some inventory loss on account of employee theft, vendor fraud and general administrative error. We maintain large amounts of inventory at our warehouse facilities. We cannot assure you that we will not experience any fraud, theft, employee negligence, security lapse, loss in transit or similar incidents in the future, which could adversely affect our business, results of operations, financial condition and cash flows. Additionally, in case of losses due to theft, fire, breakage or damage caused by other casualties, we cannot assure you that we will be able to recover

from our insurers the full amount of any such loss in a timely manner, or at all. If we incur a significant inventory loss due to third-party or employee theft and if such loss exceeds the limits of, or is subject to exclusion from, coverage under our insurance policies, it could have an adverse effect on our business, results of operations, financial condition and cash flows. Though there have not been any such instances in the last three Financial Years, we cannot assure you that in future such instance may not arise.

45. We may require raising additional equity or debt in the future in order to continue to grow our business, which may not be available on favorable terms or at all.

Our strategy to grow our business may require us to raise additional funds or refinance our existing debt for our working capital or Capex. We cannot assure you that such funds will be available on favorable terms or at all. Additional debt financing may increase our financing costs. Our financing agreements may contain terms and conditions that may restrict our ability to operate and manage our business, such as terms and conditions that require us to maintain certain pre-set debt service coverage ratios and leverage ratios and require us to use our assets, including our cash balances, as collateral for our indebtedness. If we decide to raise additional funds through the incurrence of debt, our interest and debt repayment obligations will increase, and could have a significant effect on our profitability and cash flows. Any issuance of equity to raise additional funds, on the other hand, would result in a dilution of the shareholding of existing shareholders. If we are unable to raise additional funds on favorable terms or at all as and when required, our business, results of operations, financial condition and prospects could be adversely affected.

46. Failures in internal control systems could cause operational errors which may have an adverse effect on our reputation, business, results of operations, financial condition and cash flows.

We are responsible for establishing and maintaining adequate internal measures commensurate with the size and complexity of operations. Internal control systems comprising policies and procedures are designed to ensure sound management of our operations, safekeeping of our assets, optimal utilization of resources, reliability of our financial information and compliance. We are exposed to operational risks arising from the potential inadequacy or failure of internal processes or systems and our actions may not be sufficient to guarantee effective internal controls in all circumstances. Given the size of our operations, it is possible that errors may repeat or compound before they are discovered and rectified. Our management information systems and internal control procedures that are designed to monitor our operations and overall compliance may not identify every instance of non-compliance or every suspicious transaction. If internal control weaknesses are identified, our actions may not be sufficient to correct such internal control weaknesses. These factors may have an adverse effect on our reputation, business, results of operations, financial condition and cash flows. Though there have not been any such instances in the last three Financial Years, we cannot assure you that in future such instance may not arise.

47. Our Company may not be able to pay dividends in the future. Our ability to pay dividends in the future will depend upon our future earnings, financial condition, cash flows, working capital requirements and capital expenditures and the terms of our financing arrangements.

Any dividends to be declared and paid in the future are required to be recommended by our Board of Directors and approved by its Shareholders, at their discretion, subject to the provisions of the Articles of Association and applicable law, including the Companies Act. Our Company's ability to pay dividends in the future will depend upon our future results of operations, financial condition, cash flows, sufficient profitability, working capital requirements and capital expenditure requirements. We cannot assure you that we will generate sufficient cash flow to cover our operating expenses and, as such, pay dividends to our Company's shareholders in future.

For details relating to the payment of dividend in the past and the dividend policy of our company kindly see chapter titled "Dividend Policy" on page no. 226 of this Draft Red Herring Prospectus.

48. After the completion of the Issue, our Promoters & Promoter Group will continue to collectively hold majority of the shareholding in our Company, which will allow them to influence the outcome of matters requiring shareholder approval.

As on the date of this Draft Red Herring Prospectus, our Promoters & Promoter Group collectively hold ~100% of the share capital of our Company. After the completion of the Issue, our Promoters & Promoter Group will continue to collectively hold majority of the shareholding in our Company and will continue to exercise significant influence over our business policies and affairs and all matters requiring Shareholders' approval, including the composition of our Board, the approval of mergers, strategic acquisitions or joint ventures or the sales of substantially all of our assets, and the policies for dividends, lending, investments and capital expenditures or any other matter requiring special resolution. This concentration of ownership also may delay, defer or even prevent a change in control of our Company and may make some transactions more difficult or impossible without the

support of our Promoters. The interests of the Promoters as our controlling shareholders could conflict with our interests or the interests of our other shareholders. We cannot assure you that the Promoters will act to resolve any conflicts of interest in our favour and any such conflict may adversely affect our ability to execute our business strategy or to operate our business.

For details of shareholding of our Promoter and Promoter Group, see sub-head "Shareholding of our Promoters and Promoter Group" under the head "Notes to Capital Structure" under Chapter titled "Capital Structure" on page no. 84 of this Draft Red Herring Prospectus.

49. This Draft Red Herring Prospectus contains information from an industry report prepared by Infomerics Analytics & Research Private Limited, commissioned by BRLM for the purpose of the Issue for an agreed fee.

This Draft Red Herring Prospectus contains information from an Industry Report prepared by Infomerics Analytics & Research Private Limited which have been commissioned and paid for by the Book Running Lead Manger to this Issue. This Draft Red Herring Prospectus includes information that is derived from the Industry Report, prepared by Infomerics Analytics & Research Private Limited, a research house, pursuant to an engagement with our Book Running Lead Manager. Infomerics Analytics & Research Private Limited has advised that while it has taken due care and caution in preparing the commissioned report, which is based on information obtained from sources that it considers reliable (Information), it does not guarantee the accuracy, adequacy or completeness of the Information and disclaims responsibility for any errors or omissions in the Information or for the results obtained from the use of the Information. Infomerics Analytics & Research Private Limited also highlights certain industry and market data, which may be subject to estimates and/or assumptions. There are no standard data gathering methodologies in the industry in which we conduct our business, and methodologies and assumptions vary widely among different industry sources. Further, such estimates and / or assumptions may change based on various factors. We cannot assure you that Infomerics Analytics & Research Private Limited estimates and / or assumptions are correct or will not change and accordingly, our position in the market may differ from that presented in this Draft Red Herring Prospectus. Further, the Industry Report is not a recommendation to invest or disinvest in our Company. Infomerics Analytics & Research Private Limited has disclaimed all financial liability in case of any loss suffered on account of reliance on any information contained in the Industry Report.

For details relating to the Industry Report kindly see chapter titled "Industry Overview" beginning on page no. 119 of this Draft Red Herring Prospectus. The above mentioned Industry report is available on the website of our Company at www.shreesiddhivinayakgreentech.com

EXTERNAL RISK FACTORS

Risk related to India

1. Changing laws, rules and regulations and legal uncertainties in India, including adverse application of laws and regulations, may adversely affect our business and financial performance.

The regulatory and policy environment in India is evolving and subject to frequent changes. The Government of India ("GoI") may introduce new laws, regulations or policies or amend existing ones, which may impose additional compliance requirements, require us to obtain new approvals or licences or otherwise place onerous obligations on our business. Such changes may adversely affect our operations, cost structure and future growth. Any uncertainty, delay or change in the enforcement of applicable laws or regulations may materially and adversely affect our business, financial condition, cash flows and results of operations.

2. Natural or man-made disasters, fires, epidemics, pandemics, acts of war, terrorist attacks, civil unrest and other events could adversely affect our business.

Our business, financial condition and results of operations may be adversely affected by natural or man-made disasters and other unforeseen events that are beyond our control. These include earthquakes, floods, cyclones, storms, fires, explosions, cloudbursts, landslides, extreme weather conditions, epidemics, pandemics (such as COVID-19), strikes, civil unrest, terrorist attacks, military conflicts and other disruptive events. Such incidents may damage our facilities or inventory, disrupt operations, require temporary shutdowns, affect workforce availability and supply chains or increase costs relating to insurance, security and business continuity.

India has, from time to time, experienced natural calamities, civil disturbances, protests and regional unrest, including farmer protests, localised conflicts and instances of communal or political tensions. In addition, strained international relations-particularly between India and neighbouring countries, may result in military tensions or

security concerns. Past conflicts along the India-Pakistan border and periodic terrorist incidents demonstrate the vulnerability of the region to geopolitical instability. Any escalation of such tensions may adversely affect investor confidence, disrupt economic activity and negatively impact the Indian securities markets, including the price of our Equity Shares.

Global geopolitical developments, including conflicts involving Russia–Ukraine, the U.S.–Israel–Iran region, Israel–Hamas–Hezbollah–Iran and Houthi rebel activity, have led to volatility in global financial markets, fluctuations in commodity prices, increases in logistics and supply-chain costs, heightened borrowing costs and capital outflows from emerging markets. Such developments may continue to create uncertainty and economic instability, which in turn could adversely affect our business and growth prospects.

India, as well as other countries in Asia, is susceptible to outbreaks of contagious diseases. Any renewed or future outbreak similar to COVID-19 could lead to travel restrictions, supply-chain disruptions, reduced economic activity and operational challenges for our business. Events of this nature are outside our control and may indirectly impact input costs, demand conditions and economic stability in India.

Any of the above events, individually or collectively, could materially and adversely affect our operations, cash flows, financial condition and the market price of our Equity Shares.

3. **Any downgrade in India's credit or sovereign ratings by independent rating agencies may adversely affect overall economic conditions, which in turn could negatively impact the trading price of our Equity Shares and our ability to raise financing.**

India's sovereign credit rating plays a critical role in determining the cost and availability of financing for Indian companies. Any downgrade in India's credit or sovereign ratings by international rating agencies, due to factors such as fiscal imbalances, changes in tax or monetary policy, deterioration in macroeconomic indicators, geopolitical developments or a decline in foreign exchange reserves, may adversely impact India's economic environment. These factors are beyond our control.

A downgrade of India's sovereign rating could negatively affect our access to domestic and overseas debt markets and may result in higher borrowing costs, more restrictive financing terms or reduced availability of credit. This could adversely impact our ability to raise funds for working capital, capital expenditure, expansion initiatives or other business requirements and in turn negatively affect our business, financial condition, results of operations and growth prospects.

Further, adverse revisions in India's credit ratings may weaken investor sentiment, increase market volatility and affect the performance of the Indian securities markets, which may negatively impact the trading price of our Equity Shares.

4. **We may be affected by competition laws and labour laws, the adverse application or interpretation of which could adversely affect our business.**

The Competition Act, 2002, as amended ("Competition Act"), regulates practices that may have an Appreciable Adverse Effect on Competition ("AAEC") in India. Any arrangement or understanding that causes or is likely to cause an AAEC is void and may result in substantial penalties. Agreements involving price fixing, limiting production or supply, market sharing, bid-rigging or collusive bidding are presumed to have an AAEC and are prohibited. The Competition Act also restricts abuse of dominant position by enterprises.

Further, the combination (merger control) provisions require certain acquisitions, mergers or amalgamations exceeding specified asset or turnover thresholds to be mandatorily notified to and pre-approved by the Competition Commission of India ("CCI"). The CCI also possesses extraterritorial jurisdiction to investigate agreements, conduct or combinations occurring outside India if they have an AAEC in India.

As we may enter into commercial arrangements or evaluate strategic transactions from time to time, the applicability or interpretation of the Competition Act to such transactions cannot be predicted with certainty. Any investigation, enforcement action, adverse order or penalty by the CCI or even adverse publicity associated with such proceedings, could materially and adversely affect our business, financial condition, results of operations, reputation and prospects.

Further, the GoI introduced new laws relating to social security, occupational safety, industrial relations and wages namely, the Code on Social Security, 2020 ("Social Security Code"), the Occupational Safety, Health and Working Conditions Code, 2020, the Industrial Relations Code, 2020 and the Code on Wages, 2019, which consolidate, subsume and replace numerous existing central labour legislations. (collectively, the "Labour Codes"). The

President of India has accorded consent to the Labour Codes and the said code was brought into force w.e.f. November 21, 2025. The implementation of these Labour Codes they may increase the financial burden on our Company and could adversely impact our profitability. For instance, under the Social Security Code, a new concept of deemed remuneration has been introduced, such that where an employee receives more than half (or such other percentage as may be notified by the Central Government) of their total remuneration in the form of allowances and other amounts that are not included within the definition of wages under the Social Security Code, the excess amount received shall be deemed as remuneration and accordingly be added to wages for the purposes of the Social Security Code and the compulsory contribution to be made towards the employees' provident fund.

Uncertainty in the interpretation, applicability or enforcement of competition laws & labour laws, and any changes or future amendments thereto, may require significant management time and resources, increase compliance costs and could adversely affect our operations or restrict our ability to grow our business.

5. Financial instability in other countries may cause increased volatility in Indian and other financial markets.

The Indian economy and financial markets are significantly influenced by global economic and market conditions, including those in the United States, Europe, China and emerging markets in Asia. Although economic conditions vary across countries, adverse developments or financial instability in one major economy can trigger a loss of investor confidence across other emerging markets, including India. Such contagion effects may lead to capital outflows, increased market volatility and a decline in the performance of the Indian securities markets.

Past episodes of global financial turmoil, including disruptions in Asian and Russian markets, deterioration of credit conditions in the United States and volatility in other international markets, have adversely affected the Indian economy. Further the rising inflation and tightening monetary policy globally may directly or indirectly impact India's economic stability.

China is one of India's major trading partners and concerns regarding a potential slowdown in the Chinese economy or strained bilateral relations may adversely affect trade volumes and India's export growth. Additionally, global developments such as trade disputes, rising protectionism and economic slowdowns in large economies may lead to risk aversion, reduced liquidity and volatility in international capital markets, thereby affecting the Indian financial system.

Although various governments and regulators have introduced policy measures to stabilise financial markets, the long-term impact of such measures remains uncertain and global financial instability or the perception of instability may restrict capital availability, increase borrowing costs, reduce investor appetite and adversely affect liquidity in the Indian markets. Events such as the COVID-19 pandemic have also demonstrated how rapidly global shocks can disrupt economic activity, impact financial markets and weaken business environments worldwide.

Any significant deterioration in international market conditions, geopolitical tensions, global credit stress or prolonged volatility may adversely affect the Indian economy and financial sector and in turn, materially and adversely impact our business, financial condition, cash flows, results of operations and the trading price of our Equity Shares.

6. Substantial past, ongoing and future changes in the Indian tax tegime could adversely affect our business, financial condition and the trading price of our Equity Shares

India's tax regime has undergone significant reform in recent years, including changes to direct and indirect taxes and remains subject to frequent amendments at the Central and State levels. There can be no assurance that the tax rates, exemptions, incentives or slabs currently available to us will continue in the future or that new taxes, cesses or surcharges will not be introduced. Any such changes may increase our overall tax burden and adversely affect our profitability.
The implementation of the Goods and Services Tax ("GST") with effect from July 1, 2017, replaced multiple indirect taxes with a unified tax structure. While GST was intended to simplify the indirect tax framework, periodic changes in classification, rates, input credit eligibility and compliance requirements continue to create uncertainty. Any future amendments in GST law or its interpretation, including those relating to valuation, place of supply or denial of input tax credits, may increase our compliance costs or expose us to additional tax liabilities, penalties or litigation.

Further, the General Anti-Avoidance Rules ("GAAR"), applicable from assessment year 2018-19, empower Indian tax authorities to declare arrangements as "impermissible avoidance arrangements" if considered to be primarily designed to obtain a tax benefit. Given the limited jurisprudence available on the application of GAAR, there is uncertainty regarding how tax authorities may interpret or invoke these provisions. Any adverse application of

GAAR could result in denial of tax benefits, re-computation of income or other adjustments that may adversely affect our financials.

India's direct tax laws, including the Income Tax Act, 2025 (repead the Income Tax Act, 1961) are subject to frequent amendments through annual Finance Acts. Such changes may relate to deduction eligibility, withholding tax requirements, compliance obligations, reporting standards, transfer pricing rules or reassessment procedures. Differing interpretations by tax authorities, judicial bodies or state-level revenue authorities may lead to prolonged disputes and increased litigation risk and corresponding financial exposure.

Frequent changes or adverse interpretations of tax, corporate, foreign investment, environmental and sector-specific laws may expose us to higher compliance requirements, additional liabilities, penalties or litigation.

Given the evolving nature of India's taxation regime, future changes, whether relating to income tax, GST, customs duty, stamp duty or other fiscal regulations, may materially and adversely affect our business, financial condition, results of operations, cash flows and the trading price of our Equity Shares.
Further, any increase, modification or introduction of taxes, duties, cess or levies at the central or state level may also adversely impact our performance.

7. If inflation were to rise in India, we might not be able to increase the prices of our products at a proportional rate in order to pass costs on to our consumers thereby reducing our margins.

Inflation rates in India have been volatile in recent years and such volatility may continue in the future. India has experienced high inflation in the recent past. Increased inflation can contribute to an increase in interest rates and increased costs to our business including increased costs of wages and other expenses relevant to our business.

High fluctuations in inflation rates may make it more difficult for us to accurately estimate or control our costs. Any increase in inflation in India can increase our expenses, which we may not be able to adequately pass on to our consumers, whether entirely or in part and this may adversely affect our business and financial condition. In particular, we might not be able to reduce our costs or increase the price of our products to pass the increase in costs on to our consumers. In such case, our business, results of operations, financial condition and cash flows may be adversely affected.

Further, the Government of India has previously initiated economic measures to combat high inflation rates and it is unclear whether these measures will remain in effect. We cannot assure you that inflation levels in India will not worsen in the future.

8. Investors may not be able to enforce a judgment of a foreign court against us, our Directors, Key Managerial Personnel, Senior Management Personnel in India respectively, except by way of a lawsuit in India.

Our Company, its Directors, Key Managerial Personnel, Senior Management Personnel and assets are all located in India. Therefore, it may be difficult for investors to serve process on or enforce judgments against these parties outside India. Additionally, Indian courts are unlikely to enforce foreign judgments that they consider excessive, inconsistent with public policy or contrary to Indian law.

Enforcement of foreign judgments in India is governed by Sections 13 and 44A of the Code of Civil Procedure (CPC), 1908. India is not a party to any international treaty on recognition or enforcement of foreign judgments but has reciprocal arrangements with a few jurisdictions such as the United Kingdom, United Arab Emirates, Singapore and Hong Kong. Only monetary decrees can be enforced under these agreements, excluding taxes, fines or penalties.

Judgments from non-reciprocating jurisdictions, including the United States, cannot be directly enforced in India. The party obtaining such a judgment may file a fresh suit in an Indian court within three years based on the foreign judgment. However, Indian courts may award damages differently and may not enforce foreign judgments viewed as excessive or against Indian public policy. There is also no guarantee of timely resolution.

Furthermore, anyone seeking to enforce and repatriate amounts recovered under a foreign judgment in India must obtain prior approval from the RBI. Approval may not be granted promptly or at all and any repatriated amount could be subject to income tax under applicable laws.

9. **The industry is highly fragmented and competitive and increased competition pressure may adversely affect our results of operations.**

We operate in an industry that is highly fragmented, characterised by the presence of numerous organised and unorganised players. Low entry barriers and increasing demand have encouraged both new entrants and existing participants to expand their operations, resulting in intense competition. Many competitors may have greater financial resources, longer operating histories, larger scale of operations, better market reach, stronger supplier relationships or more established brands compared to us.

Competitive factors in our industry generally include pricing, product or service quality, customer experience, distribution reach, supply-chain reliability, brand recognition and the ability to innovate. Increased competition may lead to pricing pressure, higher marketing and promotional expenses, greater customer acquisition and retention costs and reduced margins. Competitors with stronger financial or operational capabilities may also be able to respond more effectively to changing market conditions or customer preferences.

Any inability on our part to compete effectively with existing players or new entrants or to maintain or enhance our market position, may materially and adversely affect our business, revenues, profitability, financial condition and results of operations.

10. **Our business is substantially affected by prevailing economic, political, geopolitical and other conditions in India and regional and global economic and market conditions. Political, macroeconomic, demographic and other changes could adversely affect economic conditions in India, which could materially adversely affect our business, results of operations and negatively affect our stock price.**

Economic growth in India is influenced by a variety of factors, including government policy, fiscal and monetary conditions, inflation levels, interest rate movements, consumer spending patterns, industrial output, availability of credit and overall business confidence. Any adverse developments in these factors could reduce the level of economic activity in India. For example, prolonged inflationary pressures, increases in interest rates, tightening of liquidity or a slowdown in GDP growth could dampen customer demand, increase our operating costs, affect our access to capital and delay or reduce client spending in our sector. These developments may, in turn, adversely impact our revenues, profitability and cash flows.

Political developments in India, such as changes in government, shifts in policy priorities, introduction of new regulatory frameworks, delays in policy implementation or changes in taxation (including GST and indirect tax regimes), may also affect the markets in which we operate. Political instability, social unrest or significant changes in the regulatory environment could negatively affect the business climate and lead to reduced investment activity or disruptions in operations.

Furthermore, India's economy is increasingly integrated with global markets. Geopolitical tensions, global economic uncertainty, recessionary conditions in major economies, fluctuations in commodity prices, currency depreciation and supply-chain disruptions (including those arising from conflicts, pandemics or trade restrictions) can affect India's macroeconomic stability. Such external shocks may lead to higher input costs, reduced availability of raw materials, delays in procurement or volatility in foreign exchange rates, all of which could adversely affect our business operations and financial performance.

Any of the above domestic or global developments may reduce investor confidence or create volatility in the Indian equity markets. As a result, the trading price of our Equity Shares may be adversely affected, irrespective of our operational performance. Accordingly, adverse economic, political, geopolitical or market conditions in India or globally could materially adversely affect our business, results of operations, financial condition and the price of our Equity Shares.

11. **The extent and reliability of Indian infrastructure could adversely affect our Company's results of operations and financial condition.**

India's physical infrastructure is still developing compared to many developed countries. Any disruption or congestion in port, rail, road or other transportation networks, electricity supply, telecommunications or other essential public facilities could adversely impact our business operations.

Such disruptions may lead to delays in the movement of goods, increased operational costs or interruptions in our day-to-day activities. Deterioration or inadequacy of infrastructure could also negatively affect the overall efficiency of the national economy, which in turn may adversely affect our business, financial condition, results of operations and cash flows.

12. **A slowdown in economic growth in India or in the States in India, in which we operate, could cause our business to suffer.**

Our business and financial performance are closely linked to the overall health of the Indian economy and the economies of the States in which we operate. Any slowdown in economic growth, due to factors such as increases in interest rates, fluctuations in commodity and energy prices, adverse weather conditions affecting agriculture or other macroeconomic developments, could reduce demand for our products and services, impact our revenue and constrain our growth.

The Indian economy is also influenced by global economic developments. Slowdowns, financial instability or loss of investor confidence in other countries, particularly the United States, Europe, China and emerging Asian markets, may lead to volatility in Indian financial markets, affect exchange rates, increase borrowing costs and reduce liquidity, which could negatively impact our business and financial performance.

Changes in government policy in response to domestic or global economic developments, including infrastructure, trade, taxation and investment policies, may further affect economic conditions and our operations. Any combination of these factors could materially and adversely affect our business, cash flows, results of operations and the market price of our Equity Shares.

13. **We are subject to risks arising from interest rate fluctuations, which could adversely impact our business, financial condition and operating results.**

Our business and financial performance may be affected by changes in interest rates. Any increase in prevailing interest rates may raise our borrowing costs, increase our finance expenses and reduce our profitability. Higher interest rates may also affect our ability to raise additional funds in the future, whether through bank borrowings or other forms of financing and may limit our financial flexibility for expansion, working capital requirements or other business needs. If interest rates remain high or become more volatile, our cost of funds could increase significantly, which may adversely affect our business, financial condition, results of operations and cash flows.

Fluctuations in interest rates may also influence overall economic activity, including levels of consumer spending, liquidity in the market and corporate investment decisions. A period of high or unstable interest rates may reduce demand for our products and services and may impact the financial stability of our customers and suppliers, as higher borrowing costs and tighter liquidity conditions could limit their ability to meet their financial obligations on time. These factors, individually or collectively, may adversely affect our revenues, operational performance, cash flows and the market price of our Equity Shares.

14. **Volatile conditions in the Indian securities market may affect the price or liquidity of the Equity Shares.**

The Indian securities market has historically exhibited significant volatility due to a combination of external factors, including fluctuations in global economic conditions, geopolitical developments and movements in foreign portfolio investor ("FPI") flows, which are influenced by global liquidity and risk sentiment. Macroeconomic uncertainties in India—such as inflation, currency movements, fiscal and monetary policy changes or shifts in government regulations or tax policies may further impact market stability. Additionally, sector-specific developments, variations in corporate earnings, high levels of derivatives and speculative trading activity and sentiment-driven investor behavior may contribute to sharp price movements. These external factors, individually or collectively, may adversely affect market conditions and the trading price of the Equity Shares after listing. While policymakers and regulators in India and other jurisdictions have taken measures to stabilize financial markets, the long-term effectiveness of these efforts is uncertain. Any adverse economic developments or financial disruptions globally could materially and adversely affect our business, financial condition, results of operations and the trading price or liquidity of our Equity Shares.

15. **Industry risks related to unethical practices by certain market participants affect overall performance of emerging Companies.**

The industry in which we operate is exposed to risks arising from unethical or non-compliant business practices by certain market participants, including misleading marketing, inaccurate product claims, inappropriate pricing practices and other forms of misconduct. Such actions by a few players may create a negative perception of the industry as a whole, resulting in heightened scrutiny from consumers and stricter regulatory oversight, including tighter entry norms, enhanced compliance requirements and more stringent codes of conduct. As these regulatory measures apply uniformly across the industry, emerging companies such as ours may face increased compliance costs, operational constraints and reputational challenges. Any unethical business practices by other industry participants or intermediaries, even if we are not involved, may adversely affect market sentiment, industry performance and consequently our business, financial condition and results of operations.

16. **Significant differences exist between Indian GAAP and other accounting principles, such as U.S. GAAP and IFRS, which may be material to the financial statements, prepared and presented in accordance with SEBI ICDR Regulations contained in this Draft Red Herring Prospectus.**

The financial statements included in this Draft Red Herring Prospectus under chapter "Restated Financial Statements" beginning on page no. 227 are prepared and presented in conformity with Indian GAAP and restated in accordance with the SEBI ICDR Regulations. No attempt has been made to reconcile this information to other accounting principles, such as U.S. GAAP or IFRS.

Indian GAAP differs from accounting and auditing standards used in other countries and such differences may be material to the financial information presented herein. The degree to which this information is meaningful depends on familiarity with Indian GAAP, the Companies Act and SEBI ICDR Regulations. Any reliance by persons not familiar with Indian GAAP on the financial disclosures contained in this Draft Red Herring Prospectus should therefore be limited.

17. **Increasing employee compensation in India may erode some of our Company's competitive advantage and may reduce our Company's profit margins, which may have a material adverse effect on our Company's business, financial condition, cash flows and results of operations.**

Employee compensation in India has historically been significantly lower than employee compensation in the United States and Western Europe for comparably skilled professionals. However, compensation increases in India may erode some of this competitive advantage and may negatively affect our Company's profit margins. Employee compensation in India is increasing at a faster rate than in the United States and Western Europe, which could result in increased costs relating to managers and other mid-level professionals. Our Company may need to continue to increase the levels of our Company's employee compensation to remain competitive and manage attrition.

Risk related to Equity shares & Issue

18. **Certain past issues managed by our BRLM are currently trading below their issue prices and there can be no assurance that the Equity Shares issued in this Issue will not face similar price performance. The determination of the Issue Price is based on various factors and assumptions and the Issue Price, price to earnings ratio and market capitalization to revenue multiple. Issue Price of our Company may not be indicative of the market price of our Company on listing or thereafter.**

Certain past public issues managed by our BRLM are presently trading below their respective issue prices. *For further details, see head titled "Price information of past issues handled by the BRLM" under the chapter titled "Other Regulatory and Statutory Disclosures" beginning on page no. 300.* There can be no assurance that the Equity Shares issued pursuant to this Issue will not demonstrate similar price behaviour.

The Price Band and Issue Price will be determined by our Company, in consultation with the BRLM, in accordance with the SEBI ICDR Regulations. Such determination is based on various qualitative and quantitative factors, including those described under "Basis for Issue Price" beginning on page no. 107 and on an assessment of market demand through the Book Building Process. These pricing parameters, including the price-to-earnings ratio and market capitalisation-to-revenue multiple, may not be indicative of the market price of our Equity Shares upon listing or at any time thereafter.

The table below provides details of our price to earnings ratio and market capitalization to revenue from operations at the Issue Price of our Company:

Particulars	Price to Earnings Ratio*	Market Capitalisation to Revenue**
Fiscal [●]	[●]	[●]

*Price to Earnings Ratio has been determined as Issue Price per equity share divided by the EPS per equity share (as on [●])

**Market capitalisation has been computed as number of equity shares post the issue multiplied by the issue price per equity share. Revenue has been considered as on [●]

Any valuation for the purposes of this issue has been undertaken solely for the issue and may not be comparable to valuations of industry peers or to future valuations of our Company.

Prior to this issue, there has been no public market for our Equity Shares. An active or sustained trading market may not develop following the listing of the Equity Shares and listing does not guarantee liquidity.

The market price of our Equity Shares after listing may be affected by numerous factors, including but not limited to:

- overall market conditions and investor sentiment;
- fluctuations in our operating results;
- developments relating to the industry in which we operate;
- economic, legal, regulatory or political developments in India;
- announcements by third parties or initiation of significant claims or proceedings;
- variations in research analysts' estimates; and
- global or domestic market volatility.

These factors, individually or collectively, may result in substantial volatility or decline in the market price of our Equity Shares, including to levels below the issue Price. We cannot assure you that you will be able to sell your Equity Shares at or above the issue Price at any time.

19. Pursuant to listing of the Equity Shares, we may be subject to pre-emptive surveillance measures like Additional Surveillance Measure (ASM) and Graded Surveillance Measures (GSM) by the Stock Exchanges in order to enhance market integrity and safeguard the interest of investors.

SEBI and Stock Exchanges in order to enhance market integrity and safeguard interest of investors, have been introducing various enhanced pre-emptive surveillance measures. The main objective of these measures is to alert and advice investors to be extra cautious while dealing in the respective securities and advice market participants to carry out necessary due diligence while dealing in the respective securities. Accordingly, SEBI and Stock Exchanges have provided for (a) GSM on securities where such trading price of such securities does not commensurate with financial health and fundamentals such as earnings, book value, fixed assets, net-worth, price per equity multiple and market capitalization; and (b) ASM on securities with surveillance concerns based on objective parameters such as price and volume variation and volatility.

Upon listing or thereafter, we may be subject to general market conditions which may include significant price and volume fluctuations. The price of our Equity Shares may also fluctuate after the Issue due to several factors such as volatility in the Indian and global securities market, our profitability and performance, performance of our competitors, changes in the estimates of our performance or any other political or economic factor. The occurrence of any of the abovementioned factors may trigger the parameters identified by SEBI and the Stock Exchanges for placing securities under the GSM or ASM framework such as net worth and net fixed assets of securities, high low variation in securities, client concentration and close to close price variation. In the event our Equity Shares are covered under such pre-emptive surveillance measures implemented by SEBI and the Stock Exchanges, we may be subject to certain additional restrictions in relation to trading of our Equity Shares such as limiting trading frequency (for example, trading either allowed once in a week or a month) or freezing of price on upper side of trading which may have an adverse effect on the market price of our Equity Shares or may in general cause disruptions in the development of an active market for and trading of our Equity Shares.

20. A third-party could be prevented from acquiring control of us post this Issue, because of anti-takeover provisions under Indian law.

As a listed Indian entity, there are provisions in Indian law that may delay, deter or prevent a future takeover or change in control of our Company. Under the Takeover Regulations, an acquirer has been defined as any person who, directly or indirectly, acquires or agrees to acquire shares or voting rights or control over a company, whether individually or acting in concert with others. Although these provisions have been formulated to ensure that interests of investors/shareholders are protected, these provisions may also discourage a third party from attempting to take control of our Company subsequent to completion of the Issue. Consequently, even if a potential takeover of our Company would result in the purchase of the Equity Shares at a premium to their market price or would otherwise be beneficial to our shareholders, such a takeover may not be attempted or consummated because of Takeover Regulations.

21. Fluctuations in the exchange rate between the Indian Rupee and foreign currencies may have an adverse effect on the value of our Equity Shares, independent of our operating results.

On listing, our Equity Shares will be quoted in Indian Rupees on NSE Emerge. Any dividends in respect of our Equity Shares will also be paid in Indian Rupees and subsequently converted into the relevant foreign currency for repatriation, if required. Any adverse movement in currency exchange rates during the time that it takes to undertake such conversion may reduce the net dividend to foreign investors. In addition, any adverse movement in currency exchange rates during a delay in repatriating outside India with respect to the proceeds from a sale of Equity Shares, for example, because of a delay in regulatory approvals that may be required for the sale of Equity

Shares may reduce the proceeds received by Equity Shareholders. The exchange rate between the Indian Rupee and the U.S. dollar or other global currencies has fluctuated in recent years and may continue to fluctuate substantially in the future, which may have an adverse effect on the returns on our Equity Shares, independent of our operating results.

22. The Equity Shares of our Company have never been publicly traded and the current Issue may not result in an active or liquid market for the Equity Shares. Further, the price of the Equity Shares may be volatile and the investors may be unable to resell the Equity Shares at or above the Issue Price or at all.

Prior to the Current Issue, there has been no public market for the Equity Shares and an active trading market on the stock exchanges may not develop or be sustained after the Issue. Listing and quotation does not guarantee that a market for the Equity Shares will develop or if developed, the liquidity of such market for the Equity Shares. Our Equity Shares are expected to trade on NSE Emerge after the Issue, but we cannot assure you that active trading in our Equity Shares will develop after the Issue or if such trading develops that it will continue. Investors may not be able to sell our Equity Shares at the quoted price if there is no active trading in our Equity Shares. There has been significant volatility in the Indian stock markets in the recent past and the trading price of our Equity Shares after the Issue could fluctuate significantly as a result of market volatility or due to various internal or external risks, including but not limited to those described in this Draft Prospectus. The market price of our Equity Shares may be influenced by many factors, some of which are beyond our control, including, among others:

- the failure of security analysts to cover the Equity Shares after the Issue or changes in the estimates of our performance by analysts;
- the activities of competitors and suppliers;
- future sales of the Equity Shares by us or our Promoters & Promoter Group;
- investor perception of us and the industry in which we operate;
- our quarterly or annual earnings or those of our competitors;
- developments affecting fiscal, industrial or environmental regulations; and
- the public's reaction to our press releases and adverse media reports.

A decrease in the market price of our Equity Shares could cause investors to lose some or all of your investment.

23. Investors may be subject to Indian taxes arising out of income arising on the sale of the Equity Shares.

Under current Indian tax laws, unless specifically exempted, capital gains arising from the sale of equity shares in an Indian company is generally taxable in India. A securities transaction tax ("**STT**") is levied on and collected by an Indian stock exchange on which equity shares are sold. Any gain realized on the sale of listed equity shares held for more than 12 months may be subject to long-term capital gains tax in India at the specified rates depending on certain factors, such as STT paid, the quantum of gains and any available treaty exemptions. Accordingly, investors may be subject to payment of long-term capital gains tax in India, in addition to payment of STT, on the sale of any Equity Shares held for more than 12 months. STT will be levied on and collected by a domestic stock exchange on which the Equity Shares are sold. Further, any gain realized on the sale of our Equity Shares held for a period of 12 months or less will be subject to short-term capital gains tax in India. While non-residents may claim tax treaty benefits in relation to such capital gains income, generally, Indian tax treaties do not limit India's right to impose tax on capital gains arising from the sale of shares of an Indian company.

Capital gains arising from the sale of the Equity Shares will not be chargeable to tax in India in cases where relief from such taxation in India is provided under a treaty between India and the country of which the seller is resident read with the Multilateral Instrument ("**MLI**"), if and to the extent applicable and the seller is entitled to avail benefits thereunder. Generally, Indian tax treaties do not limit India's ability to impose tax on capital gains. As a result, residents of other countries may be liable for tax in India as well as in their own jurisdiction on a gain upon the sale of the Equity Shares. Our Company may or may not grant the benefit of a tax treaty (where applicable) to a non-resident shareholder for the purposes of deducting tax at source pursuant to any corporate action including dividends.

No dividend distribution tax is required to be paid in respect of dividends declared, distributed or paid by a domestic company after March 31, 2020 and accordingly, such dividends would not be exempt in the hands of the shareholders, both resident as well as non-resident. Our Company may or may not grant the benefit of a tax treaty (where applicable) to a non-resident shareholder for the purposes of deducting tax at source pursuant to any corporate action including dividends.

Our Company cannot predict whether any tax laws or other regulations impacting it will be enacted or predict the nature and impact of any such laws or regulations or whether, if at all, any laws or regulations would have an adverse effect on our business, results of operations, financial condition and cash flows.

24. Investors will not be able to immediately sell any of the Equity Shares on the Stock Exchange that they purchase in the Issue until the Issue receives appropriate trading permissions.

The Equity Shares will be listed on the NSE Emerge. Pursuant to applicable Indian laws, certain actions must be completed before the Equity Shares can be listed and trading in the Equity Shares may commence. Investors' book entry or 'demat' accounts with depository participants in India, are expected to be credited with the Equity Shares within one working day of the date on which the Basis of Allotment is approved by the Stock Exchanges. The Allotment of Equity Shares in this Issue and the credit of such Equity Shares to the applicant's demat account with depository participant could take approximately two Working Days from the Bid Closing Date and trading in the Equity Shares upon receipt of final listing and trading approvals from the Stock Exchanges is expected to commence within three Working Days of the Bid Closing Date. There could be a failure or delay in the listing of the Equity Shares on the Stock Exchanges. Any failure or delay in obtaining the approval or otherwise any delay in commencing trading in the Equity Shares would restrict investors' ability to dispose of their Equity Shares. We cannot assure you that the Equity Shares will be credited to investors' demat accounts or that trading in the Equity Shares will commence, within the time periods specified in this risk factor. We could also be required to pay interest at the applicable rates if allotment is not made, refund orders are not dispatched or demat credits are not made to investors within the prescribed time periods.

25. Any future issuance of Equity Shares or convertible securities or other equity linked instruments by us may dilute the investors' shareholding and sale of Equity Shares by shareholders with significant shareholding may adversely affect the trading price of the Equity Shares.

We may be required to finance our growth through future equity offerings. Any future equity issuances by us, including a primary offering of Equity Shares, convertible securities or securities linked to Equity Shares including through exercise of employee stock options, may lead to the dilution of investors' shareholdings in our Company. Any future equity issuances by us or sales of our Equity Shares by our shareholders may adversely affect the trading price of the Equity Shares, which may lead to other adverse consequences including difficulty in raising capital through offering of our Equity Shares or incurring additional debt. Any disposal of Equity Shares by our major shareholders or the perception that such issuance or sales may occur, including to comply with the minimum public shareholding norms applicable to listed companies in India may adversely affect the trading price of the Equity Shares, which may lead to other adverse consequences including difficulty in raising capital through offering of the Equity Shares or incurring additional debt. We cannot assure you that we will not issue Equity Shares, convertible securities or securities linked to Equity Shares or that our Shareholders will not dispose of, pledge or encumber their Equity Shares in the future. Any future issuances could also dilute the value of your investment in the Equity Shares. In addition, any perception by investors that such issuances or sales might occur may also affect the market price of our Equity Shares.

26. Under Indian law, foreign investors are subject to investment restrictions that limit our ability to attract foreign investors, which may adversely affect the trading price of the Equity Shares.

Under foreign exchange regulations currently in force in India, transfer of shares between non-residents and residents is freely permitted (subject to certain restrictions), if they comply with the pricing guidelines and reporting requirements specified by the RBI. If the transfer of shares, which are sought to be transferred, is not in compliance with such pricing guidelines or reporting requirements or falls under any of the exceptions referred to above, then a prior regulatory approval will be required. Additionally, shareholders who seek to convert Rupee proceeds from a sale of shares in India into foreign currency and repatriate that foreign currency from India require a no-objection or a tax clearance certificate from the Indian income tax authorities.

Further, under Press Note 3 (2020 Series) and the corresponding proviso to Rule 6(a) of the FEMA Non-debt Rules, any foreign investment from countries sharing land borders with India or where the beneficial owner of the Equity Shares is situated in or is a citizen of such countries, requires prior Government approval. As the term "beneficial owner" is not defined under the FDI Policy or FEMA Rules, its interpretation and enforcement remain uncertain. These uncertainties, along with the unpredictability of approval timelines, may adversely affect our ability to raise foreign capital. We also cannot assure that any required approvals from the RBI or other governmental authorities will be obtained on timely or favorable terms or at all. *[For further information, see chapter titled "Restrictions on Foreign Ownership of Indian Securities" beginning on page no. 373 of this Draft Prospectus.]*

27. **Individual Investors, Non-Institutional Investors and QIBs are not permitted to withdraw or lower their Bids (in terms of quantity of Equity Shares or the Bid Amount) at any stage after the submission of their Bid.**

Pursuant to the SEBI ICDR Regulations, Individual Investors, Non-Institutional Investors and QIBs are required to pay the Bid Amount on submission of the Bid and are not permitted to withdraw or lower their Bids (in terms of quantity of Equity Shares or the Bid Amount) at any stage after submitting a Bid. While we are required to complete all necessary formalities for listing and commencement of trading of the Equity Shares on all Stock Exchanges where such Equity Shares are proposed to be listed, including Allotment, within three Working Days from the Issue Closing Date or such other period as may be prescribed by the SEBI, events affecting the investors' decision to invest in the Equity Shares, including adverse changes in international or national monetary policy, financial, political or economic conditions, our business, results of operations, cash flows or financial condition may arise between the date of submission of the Bid and Allotment. We may complete the Allotment of the Equity Shares even if such events occur and such events may limit the Investors' ability to sell the Equity Shares Allotted pursuant to the Issue or cause the trading price of the Equity Shares to decline on listing.

28. **There is no guarantee that the Equity Shares issued pursuant to the Issue will be listed on the relevant stock exchange in a timely manner or at all.**

In accordance with Indian law and practice, permission for listing and trading of the Equity Shares issued pursuant to the issue will not be granted until after the Equity Shares have been issued and allotted. Approval for listing and trading will require all relevant documents authorizing the issuing of Equity Shares to be submitted. There could be a failure or delay in listing the Equity Shares on the SME Platform of National Stock Exchange of India Limited. Any failure or delay in obtaining the approval would restrict your ability to dispose of your Equity Shares.

29. **Rights of shareholders of companies under Indian law may be more limited than under the laws of other jurisdictions.**

Our Articles of Association, composition of our Board, Indian laws governing our corporate affairs, the validity of corporate procedures, directors' fiduciary duties, responsibilities and liabilities and shareholders' rights may differ from those that would apply to a company in another jurisdiction. Shareholders' rights under Indian law may not be as extensive and wide-spread as shareholders' rights under the laws of other countries or jurisdictions. Investors may face challenges in asserting their rights as shareholder of our Company than as a shareholder of an entity in another jurisdiction.

30. **Compliance with provisions of Foreign Account Tax Compliance Act may affect payments on the Equity Shares.**

The Foreign Account Tax Compliance Act ("FATCA") is a U.S. tax law that aims to prevent tax evasion by U.S. persons holding investments through non-U.S. entities. It imposes reporting obligations on certain non-U.S. financial institutions and intermediaries and may subject certain payments to a 30% withholding tax if the recipient or intermediary is not compliant with FATCA requirements. Although FATCA withholding generally applies to U.S.-source payments, it may also apply to certain "foreign passthru payments," a term that has not yet been conclusively defined under final U.S. Treasury regulations. As a result, it remains uncertain whether and to what extent, any payments made in respect of the Equity Shares could be regarded as "foreign passthru payments" and therefore be subject to FATCA withholding in the future.

Furthermore, while the United States and India have entered into an intergovernmental agreement that modifies certain FATCA obligations, it is not yet clear how these rules will ultimately apply to payments on the Equity Shares or to financial institutions or intermediaries through which such payments are made. If we, any financial intermediary or any investor fail to comply with applicable FATCA requirements, payments made to such investors may be subject to withholding. Any such withholding could reduce the amounts payable to investors and adversely affect the value of the Equity Shares.

31. **Sale of Equity Shares by our Promoters or other significant shareholder(s) may adversely affect the Trading price of the Equity Shares.**

Any instance of disinvestments of equity shares by our Promoters or by other significant shareholder(s) may significantly affect the trading price of our Equity Shares. Further, our market price may also be adversely affected even if there is a perception or belief that such sales of Equity Shares might occur.

32. Government regulation of foreign ownership of Indian securities may have an adverse effect on the price of the Equity Shares.

Foreign ownership of Indian securities is subject to government regulation. Under foreign exchange regulations currently in effect in India, transfer of shares between non-residents and residents is freely permitted (subject to certain exceptions) if they comply with the pricing guidelines and reporting requirements specified by the RBI. If the transfer of shares, which are sought to be transferred, is not in compliance with such pricing guidelines or reporting requirements or fall under any of the exceptions referred to above, then the prior approval of the RBI will be required. Additionally, shareholders who seek to convert the rupee proceeds from the sale of shares in India into foreign currency and repatriate that foreign currency from India will require a no objection/ tax clearance certificate from the Income Tax authorities. There can be no assurance that any approval required from the RBI or any other government agency can be obtained.

33. If security or industry analysts do not publish research or publish unfavourable or inaccurate research about the business of our Company, the price and trading volume of the Equity Shares may decline.

The trading market for the Equity Shares may depend, in part, on the research and reports that securities or industry analysts publish about us or our business. Our Company may be unable to sustain coverage by established and / or prominent securities and industry analysts. If either none or only a limited number of securities or industry analysts maintain coverage of our Company or if these securities or industry analysts are not widely respected within the general investment community, the trading price for the Equity Shares would be negatively impacted. In the event our Company obtains securities or industry analyst coverage, if one or more of the analysts downgrade the Equity Shares of our Company or publish inaccurate or un-favourable research about our business, the price of the Equity Shares may decline. If one or more of these analysts cease coverage of our Company or fail to publish reports on our Company regularly, the demand for the Equity Shares of our Company could decrease, which might cause the price and trading volume of the Equity Shares of our Company to decline.

(Rest of the page is intentionally left blank)

SECTION III: INTRODUCTION

THE ISSUE

PRESENT ISSUE IN TERMS OF THIS DRAFT RED HERRING PROSPECTUS	
Issue of Equity Shares [(1)]	Up to 65,96,000 Equity shares of face value of ₹ 10/- each fully paid up for cash at price of ₹ [●] per Equity share (including a share premium of ₹ [●] per Equity share) aggregating to ₹ [●] Lakhs
The Issue consists of:	
Market Makers Portion [(2)]	Up to [●] Equity shares of face value of ₹ 10/- each fully paid up for cash at price of ₹ [●] per Equity share (including a share premium of ₹ [●] per Equity share) aggregating to ₹ [●] Lakhs
Net Issue to the Public	Up to [●] Equity shares of face value of ₹ 10/- each fully paid up for cash at price of ₹ [●] per Equity share (including a share premium of ₹ [●] per Equity share) aggregating to ₹ [●] Lakhs
Out of which [(3)]	
Individual Investor	Not less than [●] Equity shares of face value of ₹ 10/- each fully paid up for cash at price of ₹ [●] per Equity share (including a share premium of ₹ [●] per Equity share) aggregating to ₹ [●] Lakhs, will be available for allocation to Individual Investors
Non-Institutional Investor [(4)]	Not Less than [●] Equity shares of face value of ₹ 10/- each fully paid up for cash at price of ₹ [●] per Equity share (including a share premium of ₹ [●] per Equity share) aggregating to ₹ [●] Lakhs, will be available for allocation to Non-Institutional Investors
QIB portion	Not more than [●] Equity shares of face value of ₹ 10/- each fully paid up for cash at price of ₹ [●] per Equity share (including a share premium of ₹ [●] per Equity share) aggregating to ₹ [●] Lakhs, will be available for allocation to Qualified Institutional Buyers
Pre and Post- Issue Equity shares	
Issued, Subscribed and Paid-Up Equity Shares outstanding prior to the Issue	1,22,50,000 Equity shares having face value of ₹ 10/- each
Issued, Subscribed and Paid-Up Equity Shares outstanding after the Issue	Up to 1,88,46,000 Equity shares having face value of ₹ 10/- each
Objects of the Issue/ Use of Issue Proceeds	*Please see the Chapter titled "Objects of the Issue" beginning on page 95 of this Draft Red Herring Prospectus.*

[1] The present Issue has been authorized by the Board of Directors vide a resolution passed at its meeting held on June 25, 2026 and by the shareholders of our Company vide a special resolution passed pursuant to Section 62(1)(c) of the Companies Act, 2013 at the EGM held on June 26, 2026.

[2] at least five per cent of the Issue Size is reserved for Market Maker.

[3] This Issue is being made through the Book Building method in terms of Regulation 253(1) of Chapter IX of the SEBI ICDR Regulations and hence, the allocation in the Net Issue to the public category shall be made as follows:

(a) not less than thirty-five per cent. to individual investors who applies for minimum application size;
(b) not less than fifteen per cent. to non-institutional investors;
(c) not more than fifty per cent. to qualified institutional buyers, five per cent. of which shall be allocated to mutual funds:

Provided that the unsubscribed portion in either of the categories specified in clauses (a) or (b) may be allocated to applicants in any other category:

Provided further that in addition to five per cent. allocation available in terms of clause (c), mutual funds shall be eligible for allocation under the balance available for qualified institutional buyers.

[4] In an issue made through book building process, the allocation in the non-institutional investors' category shall be as follows:

(a) one third of the portion available to non-institutional investors shall be reserved for applicants with application size of more than two lots and up to such lots equivalent to not more than ₹10 Lakhs;

(b) two third of the portion available to non-institutional investors shall be reserved for applicants with application size of more than ₹10 Lakhs:

Provided that the unsubscribed portion in either of the sub-categories specified in clauses (a) or (b), may be allocated to applicants in the other sub-category of non-institutional investors.

For further details please refer to the section titled "Issue Structure" beginning on page 323 of this Draft Red Herring Prospectus.

(Rest of the page is intentionally left blank)

SUMMARY OF RESTATED FINANCIAL STATEMENTS

Restated Statement of Assets and Liabilities

(Amount in ₹ lakhs, unless otherwise stated)

Particulars		As at		
		31 March 2026	31 March 2025	31 March 2024
A)	**EQUITY AND LIABILITIES**			
1.	**Shareholders' Funds**			
(a)	Share capital	490.00	990.00	990.00
(b)	Reserves and surplus	2,017.01	857.78	308.13
	Total (A)	**2,507.01**	**1,847.78**	**1,298.13**
2.	**Share Application Money Pending Allotment**	**-**	**-**	-
3.	**Non Current Liabilities**			
(a)	Long-term borrowings	3,419.39	3,025.53	3,988.37
(b)	Deferred tax liabilities (Net)	348.54	204.84	39.15
(c)	Long-term provisions	9.11	4.87	2.04
	Total (B)	**3,777.04**	**3,235.24**	**4,029.56**
4.	**Current Liabilities**			
(a)	Short-term Borrowings	5,575.98	4,250.05	3,656.89
(b)	Trade Payables			
	(i) total outstanding dues of micro enterprises and small enterprises; and	29.65	46.08	-
	(ii) total outstanding dues of creditors other than micro enterprises and small enterprises	1,674.97	1,279.72	2,415.36
(c)	Other current liabilities	866.50	862.57	77.70
(d)	Short term provisions	155.32	0.26	0.01
	Total (C)	**8,302.42**	**6,438.68**	**6,149.96**
	Total Equity and Liabilities (A+B+C)	**14,586.47**	**11,521.70**	**11,477.65**
B)	**ASSETS**			
1.	**Non Current Assets**			
(a)	Property, Plant and Equipment and Intangible assets			
	(i) Property, Plant and Equipment	6,683.95	5,481.56	5,278.80
	(ii) Intangible assets	-	-	-
	(iii) Capital Work-in-progress	-	266.98	193.22
	(iv) Intangible assets under development	-	-	-
		6,683.95	**5,748.54**	**5,472.02**
(b)	Non-current investments	53.25	48.20	649.20
(c)	Deferred tax asset (Net)	-	-	-
(d)	Other non-current assets	343.70	78.49	-
	Total (A)	**7,080.90**	**5,875.23**	**6,121.22**
2.	**Current Assets**			
(a)	Inventories	5,585.20	4,801.22	4,715.61
(b)	Trade receivables	723.56	14.89	266.69
(c)	Cash and bank balances	119.62	101.71	13.22
(d)	Short term loans and advances	235.94	312.04	69.94
(e)	Other current assets	841.25	416.61	290.97
	Total (B)	**7,505.57**	**5,646.47**	**5,356.43**
	Total Assets (A+B)	**14,586.47**	**11,521.70**	**11,477.65**

For A N Gawade & Co LLP
Chartered Accountants
Firm Registration Number:
122158W/W100907

Sd/-
CA Shekhar R. Maske
Designated Partner
M. No.: 157321
UDIN: 26157321ALIYWN1745
Place: Pune
Date: June 30, 2026

For Shree Siddhivinayak Greentech Industries Limited

Sd/-
Dipali Dattatraya Kulkarni
Managing Director
(DIN: 09021630)

Sd/-
Dattatray Kashinath Kulkarni
Executive Director cum CFO
(DIN: 02745916)

Sd/-
Pearl Santosh Dsouza
Company Secretary
Place: Pune
Date: June 30, 2026

Restated Statement of Profit and Loss

(Amount in ₹ lakhs, unless otherwise stated)

Particulars		For the year ended		
		31 March 2026	31 March 2025	31 March 2024
1.	**Income**			
(a)	Revenue from operations	7,526.77	5,856.63	3,627.64
(b)	Other income	304.86	256.16	62.81
	Total income	**7,831.63**	**6,112.79**	**3,690.45**
2.	**Expenditure**			
(a)	Cost of Materials Consumed	5,136.88	3,538.80	6,633.57
(b)	Manufacturing expenses	266.01	253.10	375.92
(c)	Changes in inventories of finished goods, work-in-progress and stock-in-trade	(783.98)	(85.61)	(4,715.61)
(d)	Employee benefit expenses	463.55	389.08	294.03
(e)	Finance cost	685.96	801.53	460.91
(f)	Depreciation & amortisation expense	175.33	158.97	147.79
(g)	Other expenses	300.84	288.88	130.60
	Total Expenses	**6,244.59**	**5,344.75**	**3,327.21**
3.	**Profit/(Loss) before exceptional and extra ordinary item and tax (1-2)**	**1,587.04**	**768.04**	**363.24**
4.	Exceptional items	-	-	-
5.	**Profit/(Loss) before extraordinary items and tax (3-4)**	**1,587.04**	**768.04**	**363.24**
6.	Extraordinary items	-	-	-
7.	**Profit/(Loss) before tax (5-6)**	**1,587.04**	**768.04**	**363.24**
8.	**Tax expense:**			
(a)	Tax expense for current year	284.11	53.25	15.96
(b)	Short / (Excess) provision of tax relating to earlier years	-	(0.55)	-
(b)	Deferred tax	143.71	165.68	39.15
	Net current tax expenses	**427.82**	**218.38**	**55.11**
9.	**Profit/(Loss) for the year (7-8)**	**1,159.22**	**549.66**	**308.13**
	Earnings per share [nominal value of ₹ 10 per share] (Pre bonus issue)			
	Basic	23.66	11.22	6.29
	Diluted	23.66	11.22	6.29
	Earnings per share [nominal value of ₹ 10 per share] (Post bonus issue)			
	Basic	9.46	4.49	2.52
	Diluted	9.46	4.49	2.52

.

For A N Gawade & Co LLP
Chartered Accountants
Firm Registration Number:
122158W/W100907

Sd/-
CA Shekhar R. Maske
Designated Partner
M. No.: 157321
UDIN: 26157321ALIYWN1745
Place: Pune
Date: June 30, 2026

For Shree Siddhivinayak Greentech Industries Limited

Sd/-
Dipali Dattatraya Kulkarni
Managing Director
(DIN: 09021630)

Sd/-
Dattatray Kashinath Kulkarni
Executive Director cum CFO
(DIN: 02745916)

Sd/-
Pearl Santosh Dsouza
Company Secretary
Place: Pune
Date: June 30, 2026

.

Restated Statement of Cash Flows

(Amount in ₹ lakhs, unless otherwise stated)

Particulars	For the year ended		
	31 March 2026	31 March 2025	31 March 2024
A) Cash Flow From Operating Activities :			
Net Profit before tax	1,587.04	768.04	363.24
Adjustments for :			
Depreciation and amortization expense	175.33	158.97	147.79
Interest income	(19.58)	(12.12)	(8.15)
Interest Paid	685.96	801.53	460.91
Operating profit before working capital changes	**2,428.75**	**1,716.42**	**963.79**
Changes in Working Capital			
(Increase)/Decrease in Inventories	(783.98)	(85.61)	(4,715.61)
(Increase)/Decrease in trade receivables	(708.67)	251.80	(266.69)
(Increase)/Decrease in other current assets	(424.64)	(125.64)	161.40
Increase/(Decrease) in trade payables	378.82	(1,089.56)	2,017.47
Increase/(Decrease) in other current liabilities	3.93	784.87	77.70
Increase/(Decrease) in long term provisions	4.24	2.83	2.04
Increase/(Decrease) in short term provisions	155.06	0.25	(2.78)
(Increase)/Decrease in other non current assets	(265.21)	(78.49)	-
Cash generated from operations before taxes	**788.30**	**1,376.87**	**(1,762.68)**
Direct Tax Paid	(284.11)	(52.70)	(15.96)
Net cash flow from/(used in) operating activities	**504.19**	**1,324.17**	**(1,778.64)**
B) Cash Flow From Investing Activities :			
Purchase of Property, Plant and Equipment/ Transfer from CWIP to PPE	(1,377.72)	(435.49)	(5,619.82)
Sale of Property, Plant and Equipment/transfer from CWIP to PPE	266.98	-	4,217.08
(Increase)/Decrease in non-current investments	(5.05)	601.00	(638.45)
(Increase)/Decrease in short-term loans & advances	76.10	(242.10)	(29.98)
Interest income on fixed deposit	19.58	12.12	8.15
Net cash flow from/(used in) investing activities	**(1,020.11)**	**(64.47)**	**(2,063.02)**
C) Cash Flow From Financing Activities :			
Capital issued during the year	-	-	980.00
Redemption of Preference shares	(500.00)	-	-
Proceeds from long-term borrowings	393.86	-	-
Repayment of long-term borrowings	-	(962.84)	(478.51)
Proceeds from short-term borrowings	1,325.93	593.16	3,646.64
Repayment of short-term borrowings	-	-	-
Interest Paid	(685.96)	(801.53)	(460.91)
Net cash flow from/(used in) financing activities	**533.83**	**(1,171.21)**	**3,687.22**
Net Increase/(Decrease) In Cash & Cash Equivalents	17.91	88.49	(154.44)
Cash equivalents at the beginning of the year	101.71	13.22	167.66
Cash equivalents at the end of the year	119.62	101.71	13.22

Notes :- PARTICULARS		For the year ended		
		31 March 2026	31 March 2025	31 March 2024
1	Component of Cash and Cash equivalents			
	Cash on hand	46.07	40.76	5.61
	Balances with banks			
	- In Current Accounts	73.55	60.95	7.61
	- In Deposit Account	-	-	-
2	The Restated Statement of Cash Flows has been prepared under the indirect method as set out in AS 3, Statement of Cash Flows.			

For A N Gawade & Co LLP
Chartered Accountants
Firm Registration Number:
122158W/W100907

Sd/-
CA Shekhar R. Maske
Designated Partner
M. No.: 157321
UDIN: 26157321ALIYWN1745
Place: Pune
Date: June 30, 2026

For Shree Siddhivinayak Greentech Industries Limited

Sd/-
Dipali Dattatraya Kulkarni
Managing Director
(DIN: 09021630)

Sd/-
Dattatray Kashinath Kulkarni
Executive Director cum CFO
(DIN: 02745916)

Sd/-
Pearl Santosh Dsouza
Company Secretary
Place: Pune
Date: June 30, 2026

SUMMARY OF CONTINGENT LIABILITIES

A summary of our contingent liabilities as at March 31, 2026, March 31, 2025 and March 31, 2024, as per AS 29 – Provisions, Contingent Liabilities and Contingent Assets, derived from our Restated Financial Statement is set forth below:

(in Lakhs)

Particulars	As at March 31, 2026	As at March 31, 2025	As at March 31, 2024
Tax Deducted at source	20.91	6.87	0.04
Bank guarantee	0.50	-	-

For details on our contingent liabilities (as per AS 29– Provisions, Contingent Liabilities and Contingent Assets) during the restated audit period as mentioned in this Draft Red Herring Prospectus i.e., for the period March 31, 2026, March 31, 2025 and March 31, 2024 please refer *Note 42 titled "Contingent Liability and Commitments" of Annexure V- Notes to Restated Financial Information of the chapter titled "Restated Financial Statements on page no. 260 of this Draft Red Herring Prospectus.*

For risk associated with respect to contingent liability kindly refer to Risk Factor No 14 mentioned in Section titled 'Risk Factors' on page no. 35 of this Draft Red Herring Prospectus.

(Rest of the page is intentionally left blank)

SUMMARY OF RELATED PARTY TRANSACTIONS

The summary of Related Party Transaction for the Financial Year ended on March 31, 2026, March 31, 2025 and March 31, 2026 based on Restated Financial Information are given as under:

Names of the related parties with whom transaction were carried out during the years and description of relationship:

Sr. No.	Name	Description of Relationship
1	Dattatray Kashinath Kulkarni	Director
2	Dipali Dattatray Kulkarni	Director
3	Shree Siddhivinayak Foodtech Farmer Producer Company	Director and Promoter of the company holds share in the said company
4	Shree Siddhivinayak Agritech Industries Limited	Director and Promoter of the company holds share in the said company
5	Shree Siddhivinayak Social Foundation	Director and Promoter of the company holds share in the said company
6	Ganesh Kamate	SMP
7	Mangesh Prabhakar Kulkarni	Relative of Director
8	Shri Siddhivinayak Petroleum	Proprietorship of Director

Details of Transaction with Related Parties

Sr. No.	Nature of Transaction	For the year ended		
		31 March 2026	31 March 2025	31 March 2024
1	**Rent paid**			
	Dattatray Kashinath Kulkarni (including GST)	54.60	26.36	16.40
	Dipali Dattatray Kulkarni (Vehicle rent)	7.20	1.20	-
2	**Rent Deposit**			
	Dattatray Kashinath Kulkarni	-	-	11.00
3	**Purchases**			
	Shri Siddhivinayak Petroleum	10.99	0.06	11.72
	Shree Siddhivinayak Agritech Industries Limited	-	-	340.16
4	**Sale**			
	Shree Siddhivinayak Foodtech Farmer Producer Company	-	162.00	336.00
5	**H&T Bill**			
	Dipali Dattatray Kulkarni	49.88	15.25	41.54
	Ganesh Kamate	16.04	11.16	31.01
	Mangesh Prabhakar Kulkarni	9.66	-	-
6	**Unsecured loan taken**			
	Dattatray Kashinath Kulkarni	-	400.00	250.25
	Dipali Dattatray Kulkarni	3,183.51	1,292.37	2,960.30
	Shree Siddhivinayak Agritech Industries Limited	920.78	864.74	918.88
7	**Loans Repaid**			
	Dattatray Kashinath Kulkarni	1.15	0.50	240.00
	Dipali Dattatray Kulkarni	1,747.54	615.23	3,348.21
	Shree Siddhivinayak Agritech Industries Limited	920.78	864.74	918.88
8	**Salary**			
	Ganesh Kamate	7.39	6.18	4.82
9	**CSR Expenses**			
	Shree Siddhivinayak Social Foundation	7.39	-	-
10	**Staff Advance**			
	Ganesh Kamate	(3.27)	2.49	0.30

For further details please refer *Note 28 titled "Statement of Related Party Transaction" of Annexure V- Notes to Restated Financial Information of the chapter titled "Restated Financial Statements on page no. 248 of this Draft Red Herring Prospectus*

GENERAL INFORMATION

Our Company was originally incorporated on June 24, 2022 as "Shree Siddhivinayak Greentech Industries Private Limited", a Private Limited Company under the provisions of the Companies Act, 2013, vide Certificate of Incorporation dated June 25, 2022, issued by the Registrar of Companies, Central Processing Centre. Our Company's main objects is to carry on the business of manufacturing and trading of Jaggery and Sugar including all its "by-products" like bagasses, press mud, molasses and ash. Further the main objects of our Company also allow our Company to undertake the manufacturing, trading and cultivation of food products. Our Company filed e-form 20A for submission of declaration of commencement of business on September 16, 2022.

Our company initially started with the manufacturing of Jaggery Powder in the FY 2023-2024. Thereafter, our Company entered the segment of value added food products i.e. Jaggery based Pre-Mixes (Instant Rice Kheer, Jaggery Tea, Jaggery Laddoo, Jaggery Lapsi and Jaggery Coffee premixes) during the FY 2024-2025. Thereafter, our Company started the manufacturing of Khandsari Sugar during FY 2025-2026. Further during the same period our Company also ventured into backward integration of cultivation and sale of Sugarcane Seeds ("Cane Seeds").

Subsequently, our Company was converted from a Private Limited Company to a Public Limited Company pursuant to a special resolution passed by the shareholders at the Extraordinary General Meeting held on January 30, 2026. The name of our Company was consequently changed to "Shree Siddhivinayak Greentech Industries Limited", and a fresh Certificate of Incorporation was issued by the Registrar of Companies, Central Processing Centre, on March 27, 2026.

Thereafter, the MOA of our Company was amended to reflect the insertion of the following new clause to the main objects, vide Special Resolution passed at the Extraordinary General Meeting held June 16, 2026:

To carry on the business of farming, horticulture, tissue culture, biotech, floriculture, sericulture, cultivation of all kinds of food grains, seeds, nursery, fruits, fodders and to carry on the business of plantation of all types of poultry farming, dairy farming dairy products and agricultural plantations.

The same was approved by the Registrar of Companies, Central Processing Centre vide issue of "Certificate of Registration of the Special Resolution confirming Alteration of Object Clause(s)" dated July 02, 2026.

It is to be noted that the aforesaid amendment did not result in any material change in the scope of our Company's existing operations but is intended solely for the purpose of clarity, precision, and better presentation of our Company's objects in its constitutional document.

The Corporate Identification Number of our Company is U10720MH2022PLC385368. The registered office of our Company is situated at Block Number 1 and 4 Floor No-1 and 2 Survey No 120, Plot No 4 & C.T.S. Number-5343 Sambhaji Nagar Behind DIC, Osmanabad, Maharashtra, India, 413501.

The Promoters of our Company are Mr. Dattatray Kashinath Kulkarni and Mrs. Dipali Dattatraya Kulkarni.

For further details, please refer to the chapter titled "Our History and Certain Corporate Matters" beginning on page 194 of this Draft Red Herring Prospectus.

Brief Details of the Company	
Name of the Company	Shree Siddhivinayak Greentech Industries Limited
Date of Incorporation	June 24, 2022
Corporate Identification Number	U10720MH2022PLC385368
Registration Number	385368
Registered & Corporate Office	**Address:** Block Number 1 and 4 Floor No-1 and 2 Survey No 120, Plot No 4 & C.T.S. Number- 5343 Sambhaji Nagar Behind DIC, Osmanabad, Maharashtra, India,413501 **Contact Person:** Dattatray Kashinath Kulkarni **T:** +91 8669522424 **E:** info@shreesiddhivinayakgreentech.com **W:** www.shreesiddhivinayakgreentech.com
Category of Company	Company Limited by Shares
Sub-category of the Company	Indian Non-Government Company

Brief Details of the Company	
Address of Registrar of Companies	**Registrar of Companies, Nagpur** New Secretariat Building, 2nd Floor, East Wing, Civil Lines, Nagpur-440001 **T:** 022-22812627 **E**: roc.nagpur@mca.gov.in **W**: www.mca.gov.in
Designated Stock Exchange	**NSE EMERGE** **(Emerge Platform of National Stock Exchange of India Limited)** Plot no. C/1, G Block, Bandra-Kurla Complex Bandra (E) Mumbai - 400051.
Company Secretary and Compliance Officer	**Pearl Santosh Dsouza** Company Secretary & Compliance officer **Address**: Block Number 1 and 4, Floor No-1 and 2, Survey No 120, Plot No 4 & C.T.S. Number- 5343 Sambhaji Nagar Behind DIC, Osmanabad, Maharashtra, India,413501 **T:** +91 8669522424 **E:** cs@shreesiddhivinayakgreentech.com
Chief Financial Officer (CFO)	**Dattatray Kashinath Kulkarni** Executive Director cum Chief Financial Officer **Address**: Block Number 1 and 4 Floor No-1 and 2 Survey No 120, Plot No 4 & C.T.S. Number- 5343 Sambhaji Nagar Behind DIC, Osmanabad, Maharashtra, India,413501 **T:** +91 8669522424 **E:** cfo@shreesiddhivinayakgreentech.com
Statutory & Peer Review Auditor of the company	**A N Gawade & Co LLP, Chartered Accountants** **Address:** 7, Saraswati Heights, Behind Cafe Goodluck, Deccan Gymkhana, Pune – 411004 **Peer Review Number:** 023022 **FRN:** 122158W/W100907 **T:** +91 7722063311 **E: Shekhar.maske@angca.com**
Issue Programme	**Issue Opens on: [●]** **Issue Closes on: [●]**

BOARD OF DIRECTORS OF OUR COMPANY

Our Company's Board comprises of the following Directors:

Sr. No.	Name of Director	Designation	DIN	Residential Address
1	Dipali Dattatraya Kulkarni	Managing Director	09021630	Kakade Plot, Sambhaji Nagar, Osmanabad, Maharashtra- 413501, India
2	Dattatray Kashinath Kulkarni	Executive Director cum Chief Financial Officer	02745916	Kakade Plot, Sambhaji Nagar, Osmanabad, Maharashtra- 413501, India
3	Brijesh Jaynarayan Didvaniya	Independent Director	10192519	Near Naroba Mandir Basweshwar Nagar, Old Kautha Nanded, Cidco, Maharashtra - 431603, India
4	Mahesh Ashok Nannor	Independent Director	11685251	Sr. No.24/1/5, Flat No. 608, Ganesh Pride, Ambegaon Bk (part) (n.v.), Pune, Maharashtra - 411046
5	Sachin Balajirao Ramgirwar	Independent Director	11686334	1-9-796, Anand Nagar road, near Income tax colony, Janardhan Nagar, Taroda Bk. Nanded, Maharashtra - 431605

For further details of the Board of Directors, please refer to the heading titled "Board of Directors" in the Chapter titled "Our Management" beginning on page no 200 of this Draft Red Herring Prospectus

INVESTOR GRIEVANCES

Investors may contact the Company Secretary and Compliance Officer or the Registrar to the Issue in case of any Pre-Issue or Post-Issue related grievances including non-receipt of letters of allotment, non-credit of allotted Equity Shares in the respective beneficiary accounts, non-receipt of refund orders or non-receipt of funds by electronic mode, and so on.

For all Issue related queries and for redressal of complaints, investors may also write to the Book Running Lead Manager.

All grievances relating to the ASBA process may be addressed to the SCSBs, giving full details such as name, address of the applicant, number of Equity Shares applied for, amount paid on application and the relevant Designated Branch or the collection center of the SCSBs where the Bid Cum Application Form was submitted by the ASBA Bidders in ASBA account or UPI ID linked bank account number in which the amount equivalent to the Bid Amount was blocked. Further, the investor shall also enclose the Acknowledgment Slip from the Designated Intermediaries in addition to the documents/information mentioned hereinabove.

The Bidder should give full details such as name of the sole/first Bidder, Bid Cum Application Form number, Bidder DP ID, Client ID, Bank Account No./UPI ID, PAN, date of the Bid Cum Application Form, address of the Bidder, number of the Equity Shares applied for and the name and address of the Designated Intermediary where the Bid Cum Application Form was submitted by the Bidder. Further, the investor shall also enclose the Acknowledgement Slip from the Designated Intermediaries in addition to the documents or information mentioned hereinabove.

DETAILS OF KEY INTERMEDIARIES PERTAINING THIS ISSUE AND OUR COMPANY

LEAD MANAGER	RTA & REGISTRAR TO THE ISSUE
Erudore Capital Private Limited **CIN :** U64990MH2024PTC430828 **Address:** Office No. 304, Third Floor, Morya Grand, Veera Desai Industrial Estate Road, Andheri (West), Mumbai - 400053, Maharashtra, India **T:** +91 74001 76215 **E:** info@erudorecapital.com **Investor Grievance Email ID:** investor@erudorecapital.com **Contact Person:** Payal Saurabh Parikh **W:** www.erudorecapital.com **SEBI Regn. No.:** INM000013280	**Mas Services Limited** **CIN:** U74899DL1973PLC006950 **Address**: T-34, 2nd Floor, Okhla Industrial Area, Phase-II, New Delhi-110020 **T:** 011-26387281 **E:** ipo@masserv.com **Investor Grievance Email ID:** investor@masserv.com **Contact person:** N.C. Pal **W:** www.masserv.com **SEBI Regn. No.:** INR000000049
STATUTORY AND PEER REVIEW AUDITOR OF THE COMPANY*	**LEGAL ADVISOR TO THE ISSUE**
A N Gawade & Co LLP, Chartered Accountants **Address:** 7, Saraswati Heights, Behind Cafe Goodluck, Deccan Gymkhana, Pune – 411004 **Peer Review Number:** 023022 **FRN:** 122158W/W100907 **T:** +91 7722063311 **E:** Shekhar.maske@angca.com	**M V Kini, Law Firm** **Address:** Kini House, 6/39 Jangpura-B, New Delhi – 110014, India **Tel**: +91-11-2437 1038/39/40 , +91-9899016169 **Email ID:** corporatedelhi@mvkini.com **Website:** www.mvkini.com **Contact Person**: Vidisha Krishan

BANKER TO OUR COMPANY	
HDFC Bank Limited **Address:** 1st Floor HDFC Bank LTD, Barshi Road Latur **T:** +91 8668231750 **E:** Dayanand.more@hdfc.bank.in **Contact Person:** Dayanand Ram More **W:** www.hdfc.bank.in	**Dombivli Nagari Sahakari Bank Ltd** **Address:** Plot No. 122, Varad Ganesh Rd, Samarth Nagar, Chh Sambhajinagar **T:** 0240-2363341, +91 9870995649 **E:** aurangabad@dnsb.co.in **Contact Person:** Br. Manager (Raviraj R. Khillare) **W:** http://dns.bank.in
Shree Siddhivinayak Multistate Co-operative Credit Society Ltd. Osmanabad (Dharashiv) **Address:** Chhatrapati Sambhaji Nagar, Dic Office Back side, Osmanabad (Dharashiv) **T:** +91 8552031999 **E:** Siddhivinayak.CEO2525@gmail.com **Contact Person:** Rajkumar Janardhan Jadhav **W:** www.shreesiddhivinayakmultistate.com/en/	**Shree Siddhivinayak District Co. Op. Credit So Ltd Osmanabad (Dharashiv)** **Address:** Dic Road, Chhatrapati Sambhaji Nagar, Osmanabad (Dharashiv) **T:** +91 8552074999 **E:** siddhivinayakdist038@gmail.com **Contact Person:** Ramchandra Baburao Sarde
MONITORING AGENCY**	
[●]	
BANKER TO THE ISSUE **	**MARKET MAKER****
[●]	[●]

*A N Gawade & Co LLP, Chartered Accountants (Firm Registration No. 122158W/W100907), have been appointed as the Statutory Auditors of the Company for a period of five (5) years, from the Financial Year 2023-24 to 2027-28, pursuant to a resolution passed by the shareholders at the Annual General Meeting held on December 31, 2023. Further, in accordance with the requirements of SEBI (ICDR) Regulations, 2018, A N Gawade & Co LLP holds a valid Peer Review Certificate issued by the Institute of Chartered Accountants of India (ICAI) and is acting as the Peer Review Auditor for the purposes of this Issue. A N Gawade & Co LLP has carried out the restatement of the financials of our Company for the Financial Years ended March 31, 2026, March 31, 2025, and March 31, 2024, in accordance with the SEBI ICDR Regulations.

*** The respective intermediaries shall be appointed prior to filing of the Red Herring Prospectus with the Registrar of Companies.*

TYPE OF ISSUE

The present Issue is a Book Building Issue.

STATEMENT OF INTER-SE ALLOCATION OF RESPONSIBILITIES AMONG BOOK RUNNING LEAD MANAGERS

Since, Erudore Capital Private Limited ("Erudore") is the sole Book Running Lead Manager to the Issue, all the responsibilities relating to co-ordination and other activities in relation to the Issue shall be performed by Erudore and hence a statement of inter-se allocation of responsibilities is not required.

SYNDICATE MEMBER

As on the date of this Draft Red Herring Prospectus, there are no syndicate members.

DESIGNATED INTERMEDIARIES

SELF-CERTIFIED SYNDICATE BANKS

The list of banks that have been notified by SEBI to act as SCSBs for the ASBA process is provided at the website of the SEBI https://www.sebi.gov.in/sebiweb/other/OtherAction.do?doRecognised=yes and updated from time to time. For details on Designated Branches of SCSBs collecting the Application Forms, refer to the website of the SEBI https://www.sebi.gov.in/sebiweb/other/OtherAction.do?doRecognised=yes.

In accordance with SEBI Circular No. SEBI/HO/CFD/DIL2/CIR/P/2019/76 dated June 28, 2019 and SEBI Circular No. SEBI/HO/CFD/DIL2/CIR/P/2019/85 dated July 26, 2019, Individual Investors Applying using the UPI Mechanism may apply through the SCSBs and mobile applications whose names appears on the website of the SEBI (https://www.sebi.gov.in/sebiweb/other/OtherAction.do?doRecognisedFpi=yes&intmId=40) and (https://www.sebi.gov.in/sebiweb/other/OtherAction.do?doRecognisedFpi=yes&intmId=43) respectively, as updated from time to time.

SCSBS (SELF-CERTIFIED SYNDICATE BANKS) AND MOBILE APPLICATIONS ENABLED FOR UPI MECHANISM

In accordance with SEBI Circular No. SEBI/HO/CFD/DIL2/CIR/P/2019/76 dated June 28, 2019 and SEBI Circular No. SEBI/HO/CFD/DIL2/CIR/P/2019/85 dated July 26, 2019, Individual Investors Applying using the UPI Mechanism may apply through the SCSBs and mobile applications whose names appears on the website of the SEBI (https://www.sebi.gov.in/sebiweb/other/OtherAction.do?doRecognisedFpi=yes&intmId=40) and updated from time to time. A list of SCSBs and mobile applications, which are live for applying in public issues using UPI mechanism is provided as 'Annexure A' for the SEBI circular number SEBI/HO/CFD/DIL2/CIR/P/2019/85 dated July 26, 2019, as amended.

SYNDICATE SCSB BRANCHES

In relation to Bids (other than Bids by Anchor Investors and IIs) submitted to a member of the Syndicate, the list of branches of the SCSBs at the Specified Locations named by the respective SCSBs to receive deposits of Bid cum Application Forms from the members of the Syndicate is available on the website of the SEBI (https://www.sebi.gov.in/sebiweb/other/OtherAction.do?doRecognisedFpi=yes&intmId=35) and updated from time to time or any such other website as may be prescribed by SEBI from time to time. For more information on such branches collecting Bid cum Application Forms from the Syndicate at Specified Locations, see the website of the SEBI at www.sebi.gov.in/sebiweb/other/OtherAction.do?doRecognised=yes&intmId=35 or any such other website as may be prescribed by SEBI from time to time.

REGISTERED BROKERS

Applicants can submit ASBA Forms in the using the stockbroker network of the stock exchange, i.e. through the Registered Brokers at the Broker Centers. The list of the Registered Brokers, including details such as postal address, telephone number and e-mail address, is provided on the websites of the respective Stock Exchanges at www.bseindia.com and www.nseindia.com , as updated from time to time.

REGISTRAR TO ISSUE AND SHARE TRANSFER AGENTS

In terms of SEBI circular no. CIR/CFD/POLICYCELL/11/2015 dated November 10, 2015, the list of the RTAs eligible to accept Applications forms at the Designated RTA Locations, including details such as address, telephone, number and e-mail address, are provided on the website of the SEBI (www.sebi.gov.in), and updated from time to time. For details of RTA, please refer https://www.sebi.gov.in/sebiweb/other/OtherAction.do?doRecognisedFpi=yes&intmId=10

COLLECTING DEPOSITORY PARTICIPANTS

The list of the Collecting Depository Participants (CDPs) eligible to accept Application Forms at the Designated CDP Locations, including details such as name and contact details, are provided at https://www.sebi.gov.in/sebiweb/other/OtherAction.do?doRecognisedFpi=yes&intmId=19 for NSDL CDPs and at https://www.sebi.gov.in/sebiweb/other/OtherAction.do?doRecognisedFpi=yes&intmId=18 for CDSL CDPs, as updated from time to time. The list of branches of the SCSBs named by the respective SCSBs to receive deposits of the Application Forms from the Designated Intermediaries will be available on the website of the SEBI (www.sebi.gov.in) and updated from time to time.

BROKERS TO THE ISSUE

All members of the recognized stock exchanges would be eligible to act as Brokers to the Issue.

CREDIT RATING

As on the date of this Draft Red Herring Prospectus, our Company does not have any credit rating.

IPO GRADING

Since the Issue is being made in terms of Chapter IX of SEBI (ICDR) Regulations, there is no requirement of appointing an IPO grading agency.

DEBENTURE TRUSTEE

As this is an Issue of Equity Shares, the appointment of Debenture trustees is not required.

MONITORING AGENCY

Our Company will appoint a monitoring agency prior to the filing of the Red Herring Prospectus in accordance with Regulation 262(1) of the SEBI (ICDR) Regulations, for monitoring the utilisation of the proceeds from the Issue. *For details in relation to the proposed utilisation of the Net Proceeds from the Fresh Issue, kindly refer to the heading titled "Proposed Schedule of Implementation and Utilization of Net Proceeds" under the chapter titled "Objects of the Issue" on the page no. 96 of this Draft Red Herring Prospectus.*

Pursuant to Regulation 32(3) of the SEBI (LODR) Regulations, 2015, our Company shall on a quaterly basis disclose to the Audit Committee the uses and application of the Net Proceeds. Until such time as any part of the Net Proceeds remains unutilized, our Company will disclose the utilization of the Net Proceeds under separate heads in our Company's balance sheet(s) clearly specifying the amount of and purpose for which Net Proceeds have been utilized so far, and details of amounts out of the Net Proceeds that have not been utilized so far, also indicating interim investments, if any, of such unutilized Net Proceeds. In the event that our Company is unable to utilize the entire amount that we have currently estimated for use out of the Net Proceeds in a fiscal year, we will utilize such unutilized amount in the next fiscal year. Further, in accordance with Regulation 32(1)(a) of the SEBI (LODR) Regulations, 2015, our Company shall furnish to the Stock Exchanges on a quaterly basis, a statement indicating material deviations, if any, in the utilization of the Net Proceeds for the objects stated in this Draft Red Herring Prospectus.

FILING OF PROSPECTUS WITH THE BOARD AND THE REGISTRAR OF COMPANIES

The Issue Document will not be filed with SEBI, nor will SEBI issue any observation on the Issue Document in terms of Regulation 246(2) of SEBI (ICDR) Regulations. However, pursuant to Regulation 246(5) of the SEBI (ICDR) Regulations, the copy of Issue Document shall be furnished to the Board (SEBI) in soft copy.

Pursuant to SEBI Circular No. SEBI/HO/CFD/DIL1/CIR/P/2018/011 dated January 19, 2018, a copy of the Red Herring Prospectus will be filed online through SEBI Intermediary Portal at https://siportal.sebi.gov.in.

A copy of the Red Herring Prospectus along with the documents required to be filed under Section 26 of the Companies Act, 2013 will be filed online with the Registrar of Companies, Nagpur at least (3) three days prior to the date of opening of the issue.

APPRAISING ENTITY

No appraising entity has been appointed in respect of any objects of this Issue.

GREEN SHOE OPTION

No green shoe option is contemplated under the Issue.

EXPERT OPINION

Except as disclosed below, our Company has not obtained any expert opinions in connection with this Draft Red Herring Prospectus. However, the term "expert" shall not be construed to mean an "expert"" as defined under the U.S. Securities Act 1933.

Our Company has received written consent dated July 10, 2026 from A N Gawade & Co. LLP, Chartered Accountants, to include their name as required under Section 26 (1) of the Companies Act, 2013 read with SEBI ICDR Regulations, in this Draft Red Herring Prospectus, and as an "expert" as defined under Section 2(38) of the Companies Act, 2013 to the extent and in their capacity as our Statutory Auditors, and in respect of their (i) examination report dated June 30, 2026 on our Restated Financial Statements and the Restated Financial Statements for FY 2025-2026, FY 2024-2025 and FY 2023-2024, which are prepared in accordance with the SEBI ICDR Regulations, the Companies Act, 2013 and the Guidance Note on Reports in Company Prospectus (Revised 2019) issued by the Institute of Chartered Accountants of India; (ii) Report dated July 10, 2026 on the Statement of Special Tax Benefits in accordance with the requirements of the SEBI ICDR Regulations; (iii) Certificate of Key Performance Indicators dated July 10, 2026; and (iv) Various other certificates issued for the purpose of Issue Documents.

Our Company has received written consent dated July 10, 2026 from Infomerics Analytics & Research Pvt Ltd, to include their name as required under Section 26 (1) of the Companies Act, 2013 read with SEBI ICDR Regulations, in this Draft Red herring Prospectus, and as an "expert" as defined under Section 2(38) of the Companies Act, 2013 in their capacity as an Industry Report Provider, in respect of their Industry Report dated July 10, 2026 on 'Processed Food Industry w.r.t Jaggery, Khandsari & Instant Premix', and such consent has not been withdrawn as on the date of this Draft Red Herring Prospectus. *The above mentioned Industry report is available on the website of our Company at www.shreesiddhivinayakgreentech.com*

Our Company has received written consent dated July 08, 2026 from Ajay P. Kothari, to include their name as required under Section 26 (1) of the Companies Act, 2013 read with SEBI ICDR Regulations, in this Draft Red Herring Prospectus, and as an "expert" as defined under Section 2(38) of the Companies Act, 2013 in their capacity as a Chartered Engineer, in respect of their Chartered Engineer's Certificate dated July 08, 2026, and such consent has not been withdrawn as on the date of this Draft Red Herring Prospectus.

Our Company has received written consent dated July 10, 2026 from M.V. Kini, Law Firm, to include their name as required under Section 26 (1) of the Companies Act, 2013 read with SEBI ICDR Regulations, in this Draft Red Herring Prospectus, and as an "expert" as defined under Section 2(38) of the Companies Act, 2013 in their capacity as a Legal Advisor to the Issue, in respect of Chapter title 'Government and Other approvals', Key Regulations and Policies in India' and 'Outstanding Litigations and Material Developments', and such consent has not been withdrawn as on the date of this Draft Red Herring Prospectus.

CHANGE IN AUDITORS DURING THE LAST THREE (3) YEARS

The changes in the Auditors of our Company in the last three (3) years or to the extent applicable are as follows:

Name of the Auditor	Appointment/ Resignation	Date of Appointment / Resignation	Reason
A N Gawade & Co LLP, Chartered Accountants **Address:** 7, Saraswati Heights, Behind Cafe Goodluck, Deccan Gymkhana, Pune – 411004 **Peer Review Number:** 023022 **FRN:** 122158W/W100907 **T:** +91 7722063311 **E:** Shekhar.maske@angca.com	Appointment	December 31, 2023	Appointed at the AGM held on December 31, 2023, for five Financial Years starting from April 01, 2023, to March 31, 2028, in place of the retiring Auditors.

BOOK BUILDING PROCESS

Book building, in the context of the issue, refers to the process of collection of Bids from bidders on the basis of the Red Herring Prospectus, the Bid Cum Application Forms and the Revision Forms, if any, within the Price Band and the minimum Bid Lot, which will be decided by our company in consultation with the Book Running Lead Manager, and will be advertised All editions of Financial Express (a widely circulated English national daily newspaper), and All editions of Jansatta (a widely circulated Hindi national daily newspaper), and Marathi editions of Mumbai Lakshadeep (a widely circulated Regional language daily newspaper) (Marathi being the regional language of Maharashtra, where our Registered Office is located) at least two Working Days prior to the Bid/issue Opening Date and shall be made available to the Stock Exchange for the purpose of uploading on its website. *The Issue price shall be determined by our company in consultation with the Book Running Lead Manager, after the*

Bid/Issue Closing Date. For details, see chapter titled "Issue Procedure" beginning on page 328 of this Draft Red Herring Prospectus.

All Bidders other than Anchor Investors may participate through the ASBA process by providing the details of their respective ASBA Account in which the corresponding Bid Amount are to be blocked by the SCSBs. In addition to this, the Individual Investors may participate through the ASBA process by providing the details of their respective ASBA Account in which the corresponding Bid Amount are to be blocked by the SCSBs or by using the UPI Mechanism. Non-Institutional Investors with an application size of up to ₹ 5.00 lakhs may use the UPI Mechanism and may also provide their UPI ID in the Bid cum Application Form submitted with Syndicate Members, Registered Brokers, Collecting Depository Participants and Registrar and Share Transfer Agents. Anchor Investors are not permitted to participate in the Issue through the ASBA process.

Downward Modification and cancellation of the application shall not be applicable to any of the category of bidding. Further, allocation to Anchor Investors will be on a discretionary basis.

Each Bidder by submitting a Bid in the Issue, will be deemed to have acknowledged the above restrictions and the terms of the Issue. *For further details, see chapter titled "Terms of the Issue", "Issue Structure" and "Issue Procedure" beginning on pages 313, 323 and 328 respectively of this Draft Red Herring Prospectus.*

The Book Building Process is in accordance with guidelines, rules and regulations prescribed by SEBI and the Bidding Process is subject to change from time to time and Bidders are advised to make their own judgment about an investment through this process prior to submitting a Bid in the Issue.

Bidders should note that, the Issue is also subject to obtaining final listing and trading approvals from NSE Emerge.

WITHDRAWAL OF THE ISSUE

Our Company in consultation with the BRLM, reserve the right not to proceed with the Issue at any time before the Bid/Issue Opening Date without assigning any reason thereof.

If our Company withdraws the Issue any time after the Issue Opening Date but before the allotment of Equity Shares, a public notice within 2 (two) working days of the Issue Closing Date, providing reasons for not proceeding with the Issue shall be issued by our Company. The notice of withdrawal will be issued in the same newspapers where the pre-Issue advertisements have appeared and the Stock Exchange will also be informed promptly. The BRLM, through the Registrar to the Issue, will instruct the SCSBs to unblock the ASBA Accounts within 1 (one) working Day from the day of receipt of such instruction.

If our Company withdraw the Issue after the Bid/Issue Closing Date and subsequently decides to proceed with an Issue of the Equity Shares, our Company will have to file a fresh Red Herring Prospectus with the stock exchange where the Equity Shares may be proposed to be listed.

Notwithstanding the foregoing, the Issue is subject to obtaining (i) the final listing and trading approval of the Stock Exchange with respect to the Equity Shares Issued through the Prospectus, which our Company will apply for only after Allotment;

UNDERWRITING AGREEMENT

This Issue is 100% underwritten. The Underwriting agreement has been entered on [●]. Pursuant to the terms of the Underwriting Agreement, the obligations of the Underwriters are several and are subject to certain conditions specified therein. The Underwriters have indicated their intention to underwrite the following number of specified securities being issued through this Issue:

Details of the Underwriter	Indicative No. of Equity Shares to Be Underwritten	Amount Underwritten (₹ in Lakh)	% Of the total Issue Size Underwritten
[●]	[●]	[●]	[●]

*Includes [●] Equity shares of face value of ₹ 10/- each for cash of the Market Maker Reservation Portion which are to be subscribed by the Market Maker vide their agreement dated [●] in order to comply with the requirements of Regulation 261 of the SEBI ICDR Regulations.

In terms of Regulation 260(1) of the SEBI ICDR Regulations, the initial public issue shall be underwritten for hundred per cent (100%) of the Issue and shall not be restricted up to the minimum subscription level. As per Regulation 260(2) of SEBI ICDR Regulations, the Book Running Lead Manager has agreed to underwrite to a minimum extent of 15% of the Issue out of its own account.

In the opinion of our Board of Directors, the resources of the abovementioned Underwriter are sufficient to enable it to discharge its underwriting obligation in full.

DETAILS OF MARKET MAKING ARRANGEMENT FOR THIS ISSUE

Our Company and the Book Running Lead Manager have entered into a Market Making Agreement dated [●] with [●]. The following Market Maker to fulfill the obligations of Market Making for this Issue: -

Name	[●]
Correspondence Address	[●]
Contact No.	[●]
Fax No.	[●]
E-Mail	[●]
Website	[●]
Contact Person	[●]
SEBI Registration No.	[●]

[●], registered with NSE Emerge Platform, will act as the Market Maker, and has agreed to receive or deliver the specified securities in the market making process for a period of three years from the date of listing of our Equity Shares or for a period as may be notified by amendment to SEBI (ICDR) Regulations.

The Market Maker shall fulfill the applicable obligations and conditions as specified in the SEBI (ICDR) Regulations, and its amendments from time to time and the circulars issued by the NSE and SEBI regarding this matter from time to time.

- *In terms of Regulation 261(1) of SEBI (ICDR) Regulations, the Market Making arrangement through the Market Maker will be in place for a period of three years from the date of listing of our Equity Shares and shall be carried out in accordance with SEBI (ICDR) Regulations and the circulars issued by the NSE and SEBI regarding this matter from time to time.*

- *In terms of regulation 261(2) of SEBI (ICDR) Regulations, the market maker or issuer, in consultation with the Book Running Lead Manager may enter into agreements with the nominated investors for receiving or delivering the specified securities in market making, subject to the prior approval of the NSE.*

- *In terms of regulation 261(3) of SEBI (ICDR) Regulations, following is a summary of the key details pertaining to the Market Making arrangement*

[●]

(Rest of the page is intentionally left blank)

CAPITAL STRUCTURE

The Equity Share capital of our Company, as on the date of this Draft Red Herring Prospectus and after giving effect to the Issue is set forth below:

(Amount in ₹ Lakhs)

Sr. No.	Particulars	Aggregate Face Value	Aggregate Value at Issue Price (5)
A.	**Authorized Share Capital**		
	1,90,00,000 Equity Shares of ₹10/- each	1,900.00	[●]
B.	**Issued, Subscribed & Paid-up Share Capital prior to the Issue**		
	1,22,50,000 Equity Shares of ₹10/- each	1,225.00	[●]
C.	**Present issue in terms of the Draft Red Herring Prospectus of upto 65,96,000 Equity Shares having Face Value of ₹ 10/- each at a price of ₹ [●] each (1)**		
	Consisting of:		
	Fresh Public Issue of upto 65,96,000 Equity Shares of face value ₹ 10/-each at a Premium of ₹ [●]/- per share	[●]	[●]
	of Which:		
	[●] Equity Shares at an Issue Price of ₹ [●] /- per Equity Share is reserved as Market Maker Portion (2)	[●]	[●]
	Net Issue to Public of [●] Equity Shares at an Issue Price of ₹ [●] /- per Equity Share to the Public	[●]	[●]
	of the Net Issue to the Public (3)		
	Not more than [●] Equity Shares of ₹ 10/- each at an Issue Price of ₹ [●]/- per Equity Share will be available for allocation to Qualified Institutional Buyers	[●]	[●]
	Not Less than [●] Equity Shares of ₹ 10/- each at an Issue Price of ₹ [●]/- per Equity Share will be available for allocation to Non-Institutional Investors (4)	[●]	[●]
	Not less than [●] Equity Shares of ₹ 10/- each at an Issue Price of ₹ [●]/- per Equity Share will be available for allocation to Individual Investors	[●]	[●]
D.	**Issued, Subscribed and Paid-Up Share Capital after the Issue**		
	1,88,46,000 Equity Shares of Face Value of ₹ 10/- each	1884.60	
E.	**Securities Premium Account**		
	Before the Issue	Nil(6)	
	After the Issue	[●]	

(1) The present Issue has been authorized by the Board of Directors vide a resolution passed at its meeting held on June 25, 2026, and by the shareholders of our Company vide a special resolution passed pursuant to Section 23 & 62(1)(c) of the Companies Act, 2013 at the Extra Ordinary General Meeting held on June 26, 2026.

(2) At least five per cent of the issue size is reserved for Market Maker.

(3) The allocation in the net issue category shall be as follows:

a. not less than thirty five percent to individual investors, who applies for minimum application size
b. not less than fifteen per cent. to non-institutional investors
c. not more than fifty per cent. to qualified institutional buyers, five per cent. of which shall be allocated to mutual funds

Provided that the unsubscribed portion in either of the categories specified in clauses (a) or (b) may be allocated to applicants in any other category:
Provided further that in addition to five percent allocation available in terms of clause (c), mutual funds shall be eligible for allocation under the balance available for qualified institutional buyers.

(4) In an issue made through book building process, the allocation in the non-institutional investors' category shall be as follows:

a. *one third of the portion available to non-institutional investors shall be reserved for applicants with application size of more than two lots and up to such lots equivalent to not more than ₹10 Lakhs;*
b. *two third of the portion available to non-institutional investors shall be reserved for applicants with application size of more than ₹10 Lakhs:*

Provided that the unsubscribed portion in either of the sub-categories specified in clauses (a) or (b), may be allocated to applicants in the other sub-category of non-institutional investors.

(5) To be decided upon determination of the Issue Price and subject to the Basis of Allotment.

(6) The securities premium balance has been taken as per the restated financial statement as on March 31, 2026.

Our Company does not intent to undertake any Pre – IPO Placement

TYPE OF SHARES

Our Company has only one class of share capital i.e., Equity Shares of face value of ₹10/- each and all the issued Equity Shares are fully paid-up. Our Company has no outstanding convertible instruments as on the date of this Draft Red Herring Prospectus.

NOTES TO CAPITAL STRUCTURE

1. Details of changes in Authorized Share Capital of the Company since incorporation

The authorized capital of our Company was ₹ 10,00,000/- consisting of 10,000 Equity Shares of ₹ 100/- each at the time of incorporation. Further authorized share capital of our Company has been altered in the manner set forth below:

Date of Amendment / Shareholders' Resolution	Nature of Amendment	AGM/ EGM
October 20, 2022	The Authorized Share Capital of our Company was increased from ₹10,00,000/- divided into 10,000 Equity shares of ₹ 100/- each to ₹5,10,00,000/- comprising of ₹10,00,000/- divided into 10,000 Equity shares of ₹ 100/- each and ₹5,00,00,000/- divided into 50,000, 8% Non-Cumulative Non-Convertible Preference Shares of ₹1,000/- each.	EGM
March 11, 2024	The Authorized Share Capital of our Company was increased from ₹5,10,00,000/- comprising of ₹10,00,000/- divided into 10,000 Equity shares of ₹ 100/- each and ₹5,00,00,000/- divided into 50,000 8% Non-Cumulative Non-Convertible Preference Shares of ₹ 1,000/- each to ₹9,90,00,000/- comprising of ₹4,90,00,000/- divided into 4,90,000 Equity shares of ₹ 100/- each and ₹5,00,00,000/- divided into 50,000, 8% Non-Cumulative Non-Convertible Preference Shares of ₹ 1,000/- each.	EGM
August 26, 2024	The Authorized Share Capital of our Company was increased from ₹9,90,00,000/- comprising of ₹4,90,00,000/- divided into 4,90,000 Equity shares of ₹ 100/- each and ₹5,00,00,000/- divided into 50,000 8% Non-Cumulative Non-Convertible Preference Shares of ₹ 1,000/- each to ₹13,90,00,000/- comprising of ₹8,90,00,000/- divided into 8,90,000 Equity shares of ₹ 100/- each and ₹5,00,00,000/- divided into 50,000 8% Non-Cumulative Non-Convertible Preference Shares of ₹ 1,000/- each.	EGM
January 12, 2026	The existing Authorized Preference Share Capital of our Company amounting to ₹5,00,00,000/- divided into 50,000 8% Non-Cumulative Non-Convertible Preference Shares of ₹ 1,000/- each, was reclassified into Authorized Equity Share Capital of our Company. Consequently, the Authorized Share Capital of our Company became ₹13,90,00,000/- divided into 13,90,000 Equity Share of ₹100/- each.	EGM

Date of Amendment / Shareholders' Resolution	Nature of Amendment	AGM/ EGM
January 23, 2026	The Equity shares of face value of ₹100/- each of our Company were sub-divided into equity shares of face value of ₹10/- each. Consequently, the Authorized Share Capital of our Company was substituted from ₹13,90,00,000/- divided into 13,90,000 Equity Share of ₹100/- each to ₹13,90,00,000/- divided into 1,39,00,000 Equity shares of ₹10/- each.	EGM
May 19, 2026	The Authorized Share Capital of our Company was increased from ₹13,90,00,000/- divided into 1,39,00,000 Equity shares of ₹10/- each to ₹19,00,00,000/- divided into 1,90,00,000 Equity shares of ₹10/- each.	EGM

All the details w.r.t. to the above stated changes in the Authorized Share Capital of our company have been updated with MCA and the same is reflecting on the MCA Portal.

2. History of Issued, Subscribed and Paid-Up Share Capital of the Company

(a) Equity Share Capital

The history of the Issued, Subscribed and Paid-Up Equity Share Capital of our Company is set forth below:

S. No.	Date of Allotment	No. of Equity Shares Allotted	Face Value per Equity Share (In ₹)	Issue Price per Equity Share (In ₹)	Nature of Consideration	Nature of Allotment	Cumulative No. of Equity Shares	Cumulative Paid-up Capital (In ₹)
1	On Incorporation i.e., June 24, 2022 (1)	10,000	100/-	100/-	Cash	Subscription to MOA	10,000	10,00,000
2	March 22, 2024 (2)	4,80,000	100/-	100/-	Cash	Private placement	4,90,000	4,90,00,000
3	January 23, 2026 (3)	Pursuant to Special Resolution passed at the Extra Ordinary General Meeting held on January 23, 2026, Equity Shares of face value of ₹100/- each of our Company were sub-divided into Equity Shares of face value of ₹10/- each. Consequently, the issued, subscribed and paid up share capital of our Company comprising of 4,90,000 equity shares of face value of ₹100/- each amounting to ₹4,90,00,000/- was sub-divided into 49,00,000 Equity Shares of face value of ₹10/- each amounting to ₹4,90,00,000/-.						
4	June 24, 2026 (4)	73,50,000	10/-	Nil	Other than Cash	Bonus Issue	1,22,50,000	12,25,00,000

All the above-mentioned shares are fully paid up since the date of allotment.

(1) Initial Subscribers to the Memorandum of Association of our company:

Sr. No.	Name of the Allottee	Face Value (₹)	Issue Price (₹)	Nature of Allotment	Number of Equity Shares Allotted
1	Dipali Dattatraya Kulkarni	100/-	100/-	Subscription to MOA	5,000
2	Dattatray Kashinath Kulkarni				5,000
Total					**10,000**

(2) Allotment of shares dated March 22, 2024:

Sr. No.	Name of the Allottee	Face Value (₹)	Issue Price (₹)	Nature of Allotment	Number of Equity Shares Allotted
1	Dipali Dattatraya Kulkarni	100/-	100/-	Private Placement (a)	3,80,000
2	Dinesh Mukund Kulkarni				1,00,000
Total					**4,80,000**

(a) The Board of Directors of our Company vide its meeting held on March 13, 2024, approved the issue of 4,80,000 Equity shares of Face Value of ₹100/- each at an Issue Price of ₹100/- each on private placement basis. The same was approved by the shareholders at their Extra Ordinary General Meeting held on March 19, 2024. Accordingly, the Board of Directors at its meeting held on March 22, 2024, passed a resolution approving the allotment of 4,80,000 Equity shares of ₹100/- each at par on private placement basis.

Further, for details in relation to the non-compliance w.r.t. the above Private Placement, kindly refer Risk Factor No. 9 under the Section titled "Risk Factors" beginning on page no. 30 of this Draft Red Herring Prospectus.

(3) Sub-division of shares dated January 23, 2026:

Pursuant to Special Resolution passed at the Extra Ordinary General Meeting held on January 23, 2026, Equity Shares of face value of ₹100/- each of our Company were sub-divided into Equity Shares of face value of ₹10/- each. Consequently, the issued, subscribed and paid-up share capital of our Company comprising of 4,90,000 equity shares of face value of ₹100/- each amounting to ₹4,90,00,000/- were sub-divided into 49,00,000 Equity Shares of face value of ₹10/- each amounting to ₹4,90,00,000/-

(4) Allotment of shares dated June 24, 2026:

Sr. No.	Name of the Allottee	Category (Promoter/ Promoter Group/ Public)	Face Value (₹)	Issue Price (₹)	Nature of Allotment	Number of Equity Shares Allotted
1	Dipali Dattatraya Kulkarni	Promoter	10/-	Nil	Bonus Issue [(a)]	57,75,000
2	Dattatray Kashinath Kulkarni	Promoter				15,74,925
3	Pranav Pramod Kulkarni	Public				15
4	Supriya Rushikesh Bhingare	Public				15
5	Pratik Prataprao Devale	Public				15
6	Mangesh Prabhakar Kulkarni	Promoter Group				15
7	Krushna Dattatrya Kulkarni	Promoter Group				15
Total						**73,50,000**

[(a)] Ratio of Bonus Issue was 3:2 i.e. (Three (3) Fully Paid-up Equity Shares for every Two (2) Fully Paid-up Equity Share held). The Bonus issue was proposed by the Board of Directors of our Company at the meeting held on June 23, 2026 and the same was approved by the Shareholders of our Company at the Extra Ordinary General Meeting held on June 24, 2026 vide passing of Ordinary Resolution. Subsequently that Board of Directors of our Company at the meeting held on June 24, 2026 approved that allotment of the equity shares via Bonus Issue. Above allotment of shares has been made out of the closing balance of Reserves and Surplus for the period ended March 31, 2026, available for distribution to shareholders and no part of revaluation reserve has been utilized for this purpose. The shares issued in the aforementioned Bonus Issue are eligible for minimum Promoters Contribution.

(b) Preference share Capital

The history of the Issued, Subscribed and Paid-Up of 8% Non-Cumulative Non-Convertible Preference Shares Capital of our Company is set forth below:

S. No.	Date of Allotment	No. of Preference Shares Allotted	Face Value per Preference Share (In ₹)	Issue Price / Redemption Price per Preference Share (In ₹)	Nature of Consideration	Nature of Allotment	Cumulative No. of Preference Share	Cumulative Paid-up Capital (In ₹)
1	October 16, 2023 [(1)]	50,000	1,000/-	1,000/-	Cash	Private placement	50,000	5,00,00,000/-
2	December 29, 2025 [(2)]	(50,000)	1,000/-	1,000/-	Cash	Redemption	Nil	Nil
		The Preference Shareholders at the EGM held on December 29, 2025 approved the redemption/repayment of 50,000, 8% Non-Cumulative Non-Convertible Preference Shares of face value ₹1,000/- each at par aggregating to ₹5,00,00,000/-, without payment of any dividend for the FY 2025-2026. Consequent to the aforementioned EGM, the Board of directors at its meeting held on December 29, 2025, passed a resolution approving the redemption/repayment of 50,000, 8% Non-Cumulative Non-Convertible Preference Shares of face value ₹1,000/- each at par aggregating to ₹5,00,00,000/-, without payment of any dividend for the FY 2025-2026. Consequent to the Board Meeting all the 8% Non-Cumulative Non-Convertible Preference Shares were fully redeemed.						

As on the date of this Draft Red Herring Prospectus, all Preference Shares are redeemed and there are no outstanding Preference Shares.

(The rest of the page is intentionally left blank)

(1) Allotment of 8% Non-Cumulative Non-Convertible Preference Shares dated October 16, 2023:

Sr. No.	Name of the Allottee	Face Value (₹)	Issue Price (₹)	Nature of Allotment	Number of Preference Shares Allotted
1	Pranav Pramod Kulkarni	1,000/-	1,000/-	Private Placement [(a)]	1,000
2	Pramod Shmrao Kulkarni				1,000
3	Virakshi Pranav Kulkarni				1,000
4	Rushikeash Ramesh Bhad				1,000
5	Ramesh Nagnath Bhad				1,000
6	Shubham Vishwanatah Mindhe				1,000
7	Dhanaji Tanaji Suryvanshi				1,000
8	Amruta Milind Kulkarni				1,000
9	Milind Nagnath Kulkarni				1,000
10	Radhika Bhagavant Kulkarni				1,000
11	Bhagvant Ramrao Kulkarni				1,000
12	Ganesh Ashok Kamate				1,000
13	Ashok Ramdas Kamate				1,000
14	Arvind Ashok Gore				1,000
15	Aksh Ashok Gore				1,000
16	Nitin Madanrao Humbe				1,000
17	Bhimrao Devaba Shinde				1,000
18	Shankar Devaba Shinde				1,000
19	Indrajit Shankar Shinde				1,000
20	Avinash Dattu Londhe				1,000
21	Vikas Laxman Madake				1,000
22	Rajabhau Vitthal Poul				1,000
23	Khandu Nagnath Jadhav				1,000
24	Mahadev Siddhppa Fulari				1,000
25	Pranav Pramod Devale				1,000
26	Pramod Ramchandr Devale				1,000
27	Ranajit Shivaji Bhore				1,000
28	Sachin Shrihari Bhosale				1,000
29	Yogesh Vishnupant Kulkarni				1,000
30	Kishor Rangnath Godase				1,000
31	Balaji Ashok Jadhav				1,000
32	Pornima Balaji Jadhav				1,000
33	Shrinath Ramesh Nalawade				1,000
34	Supriya Rushikesh Bhingare				1,000
35	Vyanktesh Pandurang Kore				1,000
36	Priya Pramod Devale				1,000
37	Ramchandr Baburao Sarade				1,000
38	Dipali Arvind Gore				1,000
39	Anup Dadarao Naikwadi				1,000
40	Nitin Netaji Bhosale				1,000
41	Daji Navnath Pawar				1,000
42	Mangesh Prabhakar Kulkarni				1,000
43	Pornima Rajkumar Jadhav				1,000
44	Dipali Dattatraya Kulkarni				1,000
45	Dattatray Kashinath Kulkarni				1,000
46	Pravin Netaji Bhosale				1,000
47	Jaya Nitin Bhosale				1,000
48	Nakul Santosh Kulkarni				1,000
49	Sushilkumar Dattatray Joshi				1,000
50	Somesh Radhakrishna Kulkarni				1,000
Total					**50,000**

(a) *The Board of Directors of our Company at its meeting held on October 06, 2023, approved issuance of 50,000, 8% Non-Cumulative Non-Convertible Preference Shares of Face Value of ₹1,000/- each at an Issue Price of ₹1,000/- each on private placement basis. The same was approved by the shareholders at their Extra Ordinary General Meeting held on October 12, 2023. Accordingly, the Board of Directors at its meeting held on October 16, 2023, passed a resolution approving the allotment of 50,000, 8% Non-Cumulative Non-Convertible Preference Shares of ₹1,000/- each at par on private placement basis.*

(2) Redemption/Repayment of 8% Non-Cumulative Non-Convertible Preference Shares dated December 29, 2025:

The Preference Shareholders at the EGM held on December 29, 2025 approved the redemption/repayment of 50,000, 8% Non-Cumulative Non-Convertible Preference Shares of face value ₹1,000/- each at par aggregating to ₹5,00,00,000/-, without payment of any dividend for the FY 2025-2026.

Consequent to the aforementioned EGM, the Board of directors at its meeting held on December 29, 2025, passed a resolution approving the redemption/repayment of 50,000, 8% Non-Cumulative Non-Convertible Preference Shares of face value ₹1,000/- each at par aggregating to ₹5,00,00,000/-, without payment of any dividend for the FY 2025-2026.

Consequent to the Board Meeting all the 8% Non-Cumulative Non-Convertible Preference Shares were fully redeemed.

3. History of Issued, Subscribed and Paid-Up Equity or Preference Share Capital of the Company for consideration other the cash:

Except as disclosed below, we have not issued any Equity Shares or Preference Shares for consideration other than cash, at any point of time since Incorporation:

Date of Allotment	No. of Equity Shares allotted	Face Value (₹)	Issue Price (₹)	Consideration	Reasons of Allotment	Benefits accrued to company	Allottees	No. of Shares Allotted	Whether part of Promoter/ Promoter Group
June 24, 2026	73,50,000	10/-	Nil	Other than Cash	Bonus Issue of Equity Shares	Capitalization of Reserves and Surplus [(a)]	Dipali Dattatraya Kulkarni	57,75,000	Promoter
							Dattatray Kashinath Kulkarni	15,74,925	Promoter
							Pranav Pramod Kulkarni	15	No
							Supriya Rushikesh Bhingare	15	No
							Pratik Prataprao Devale	15	No
							Mangesh Prabhakar Kulkarni	15	Promoter Group
							Krushna Dattatrya Kulkarni	15	Promoter Group

[(a)] Ratio of Bonus Issue was 3:2 i.e. (Three (3) Equity Shares for every Two (2) fully paid-up Equity Share held). The Bonus issue was proposed by the Board of Directors of our Company at the meeting held on June 23, 2026 and the same was approved by the Shareholders of our Company at the Extra Ordinary General Meeting held on June 24, 2026 vide passing of Ordinary Resolution. Subsequently that Board of Directors of our Company at the meeting held on June 24, 2026 approved that allotment of the equity shares via Bonus Issue. Above allotment of shares has been made out of the closing balance of Reserves and Surplus for the period ended March 31, 2026, available for distribution to shareholders and no part of revaluation reserve has been utilized for this purpose. The shares issued in the aforementioned Bonus Issue are eligible for minimum Promoters Contribution.

4. Our company has not revalued our assets since inception and has not issued any Equity or Preference Shares by capitalizing any revaluation reserves.

5. Our Company has not issued any Equity or Preference Shares in terms of any scheme approved under sections 230-234 of the Companies Act, 2013.

6. As on the date of the Draft Red Herring Prospectus, Our Company has not issued any Equity or Preference Shares under any employee stock option scheme or employee stock purchase scheme.

7. Issue of Equity or Preference Shares at a price lower than issue price during the last one year:

For the details of issue of Equity at a price lower than issue price during the last one year, kindly refer the clause titled "(4) Allotment of shares dated June 24, 2026" under the sub head tilted "Equity Share Capital" under the head titled "History of Issued, Subscribed and Paid-Up Share Capital of the Company" under the chapter titled "Capital Structure" on page no. 80 of this Draft Red Herring Prospectus. Further, our company has not issued any Preference shares during the last one year.

(The rest of the page is intentionally left blank)

8. Shareholding Pattern of the Company

The table below presents the current shareholding pattern of our Company in accordance with Regulation 31 of SEBI LODR Regulations as on the date of this Draft Red Herring Prospectus:

Category (I)	Category of shareholder (II)	Nos. Of shareholders (III)	No. of fully paid-up equity shares held (IV)	No. of Partly paid-up equity shares held (V)	No. of shares underlying Depository Receipts (VI)	Total nos. shares held (VII) = (IV)+(V)+ (VI)	Shareholding as a % of total no. of shares (calculated as per SCRR, 1957) (VIII) As a % of (A+B+C2)	Number of Voting Rights held in each class of securities (IX)				No. of Shares Underlying Outstanding convertible securities (including Warrants, ESOP etc.) (X)	Total No of shares on fully diluted basis (including warrants, ESOP, Convertible Securities etc.) (XI)=(VII+X)	Shareholding, as a % assuming full conversion of convertible securities (as a percentage of diluted share capital) (XII)= (VII)+(X) As a % of (A+B+C2)	Number of Locked in shares (XIII)		Number of Shares pledged or otherwise encumbered or if there is any non-disposal undertaking (XIII)		Number of equity shares held in dematerialized form (XIV)
								No. of Voting Rights			Total as a % of (A+B+C)				No. (a) and % of total Shares held (b)				
								Class: eg X	Class: eg Y	Total							No. (a)	% of total Shares held (b)	
A	Promoter & Promoter Group	4	1,22,49,925	-	-	1,22,49,925	100	1,22,49,925	-	1,22,49,925	100	-	1,22,49,925	100	-		-	-	1,22,49,925
B	Public	3	75	-	-	75	Negligible	75	-	75	Negligible	-	75	Negligible	-		-	-	75
C	Non- Promoter-Non-Public	-	-	-	-	-	-	-	-	-	-	-	-	-	-		-	-	-
C1	Shares underlying DRs	-	-	-	-	-	-	-	-	-	-	-	-	-	-		-	-	-
C2	Shares held by Employee Trusts	-	-	-	-	-	-	-	-	-	-	-	-	-	-		-	-	-
	Total	**7**	**1,22,50,000**	**-**	**-**	**1,22,50,000**	**100.00**	**1,22,50,000**	**-**	**1,22,50,000**	**100.00**	-	**1,22,50,000**	**100.00**	-		**-**	**-**	**1,22,50,000**

Our Company shall file the shareholding pattern of our Company, in the form prescribed under Regulation 31 of the SEBI (LODR) Regulations, one (1) day prior to the listing of the Equity shares. The shareholding pattern will be uploaded on the website of Stock Exchange before commencement of trading of such Equity Shares.

Notes –

- As on date of this Draft Red Herring Prospectus, one (1) Equity share holds one (1) vote.
- The term "Encumbrance" has the same meaning as assigned under regulation 28(3) of SEBI (Substantial Acquisition of Shares and Takeovers) Regulations, 2011.
- We have only one class of Equity Shares of face value of ₹10/- each.
- We have entered into tripartite agreement with CDSL and NSDL

9. List of Shareholders as on the date of this Draft Red Herring Prospectus:

S. No.	Name of Shareholder	Category of Shareholder	No. of Shares Held of face value ₹ 10/- each	% of the Pre-Issue share capital	% of the Post Issue share capital
1	Dipali Dattatraya Kulkarni	Promoter	96,25,000	78.57	51.07
2	Dattatray Kashinath Kulkarni	Promoter	26,24,875	21.43	13.93
3	Mangesh Prabhakar Kulkarni	Promoter Group	25	Negligible	Negligible
4	Krushna Dattatrya Kulkarni	Promoter Group	25	Negligible	Negligible
5	Supriya Rushikesh Bhingare	Public	25	Negligible	Negligible
6	Pratik Prataprao Devale	Public	25	Negligible	Negligible
7	Pranav Pramod Kulkarni	Public	25	Negligible	Negligible
Total			**1,22,50,000**	**100.00**	**65.00**

10. Details of Shareholding of the major shareholders of the Company

a) Set forth below is a list of Shareholders holding 1% or more of the paid-up share capital of our Company and the number of Shares held by them as on the date of this Draft Red Herring Prospectus.

Sr. No.	Name of Shareholders	Category	Type of Share	Number of Shares of Face value ₹10/- each	% of the Pre-Issue share capital
1	Dipali Dattatraya Kulkarni	Promoter	Equity	96,25,000	78.57
2	Dattatray Kashinath Kulkarni	Promoter	Equity	26,24,875	21.43
	Total			**1,22,49,875**	**100.00**

Notes:
(1) Details of shares held on July 10, 2026
(2) There are no vested outstanding options

b) Particulars of the shareholders holding 1% or more of the paid-up share capital of our Company and the number of shares held by them ten days prior to the date of this Draft Red Herring Prospectus.

Sr. No.	Name of Shareholders	Category	Type of Share	Number of Shares of Face value ₹10/- each	% of the Pre-Issue share capital
1	Dipali Dattatraya Kulkarni	Promoter	Equity	96,25,000	78.57
2	Dattatray Kashinath Kulkarni	Promoter	Equity	26,24,875	21.43
	Total			**1,22,49,875**	**100.00**

Notes:
(1) Details of shares held on June 30, 2026
(2) There are no vested outstanding options

c) Particulars of the shareholders holding 1% or more of the paid-up share capital of our Company and the number of shares held by them one (01) year prior to date of this Draft Red Herring Prospectus:

Sr. No.	Name of Shareholders	Category	Type of Share	Number of Shares*	% of the Pre-Issue share capital**
1	Dipali Dattatraya Kulkarni	Promoter	Equity	3,85,000	39.90
			Preference	1,000	
2	Dattatray Kashinath Kulkarni	Promoter	Equity	5,000	1.52
			Preference	1,000	
3	Dinesh Mukund Kulkarni	Public	Equity	1,00,000	10.10
4	Pranav Pramod Kulkarni	Public	Preference	1,000	1.01
5	Pramod Shmrao Kulkarni	Public	Preference	1,000	1.01
6	Virakshi Pranav Kulkarni	Public	Preference	1,000	1.01
7	Rushikeash Ramesh Bhad	Public	Preference	1,000	1.01
8	Ramesh Nagnath Bhad	Public	Preference	1,000	1.01
9	Shubham Vishwanatah Mindhe	Public	Preference	1,000	1.01
10	Dhanaji Tanaji Suryvanshi	Public	Preference	1,000	1.01
11	Amruta Milind Kulkarni	Public	Preference	1,000	1.01

Sr. No.	Name of Shareholders	Category	Type of Share	Number of Shares*	% of the Pre-Issue share capital**
12	Milind Nagnath Kulkarni	Public	Preference	1,000	1.01
13	Radhika Bhagavant Kulkarni	Public	Preference	1,000	1.01
14	Bhagvant Ramrao Kulkarni	Public	Preference	1,000	1.01
15	Ganesh Ashok Kamate	Public	Preference	1,000	1.01
16	Ashok Ramdas Kamate	Public	Preference	1,000	1.01
17	Arvind Ashok Gore	Public	Preference	1,000	1.01
18	Aksh Ashok Gore	Public	Preference	1,000	1.01
19	Nitin Madanrao Humbe	Public	Preference	1,000	1.01
20	Bhimrao Devaba Shinde	Public	Preference	1,000	1.01
21	Shankar Devaba Shinde	Public	Preference	1,000	1.01
22	Indrajit Shankar Shinde	Public	Preference	1,000	1.01
23	Avinash Dattu Londhe	Public	Preference	1,000	1.01
24	Vikas Laxman Madake	Public	Preference	1,000	1.01
25	Rajabhau Vitthal Poul	Public	Preference	1,000	1.01
26	Khandu Nagnath Jadhav	Public	Preference	1,000	1.01
27	Mahadev Siddhppa Fulari	Public	Preference	1,000	1.01
28	Pranav Pramod Devale	Public	Preference	1,000	1.01
29	Pramod Ramchandr Devale	Public	Preference	1,000	1.01
30	Ranajit Shivaji Bhore	Public	Preference	1,000	1.01
31	Sachin Shrihari Bhosale	Public	Preference	1,000	1.01
32	Yogesh Vishnupant Kulkarni	Public	Preference	1,000	1.01
33	Kishor Rangnath Godase	Public	Preference	1,000	1.01
34	Balaji Ashok Jadhav	Public	Preference	1,000	1.01
35	Pornima Balaji Jadhav	Public	Preference	1,000	1.01
36	Shrinath Ramesh Nalawade	Public	Preference	1,000	1.01
37	Supriya Rushikesh Bhingare	Public	Preference	1,000	1.01
38	Vyanktesh Pandurang Kore	Public	Preference	1,000	1.01
39	Priya Pramod Devale	Public	Preference	1,000	1.01
40	Ramchandr Baburao Sarade	Public	Preference	1,000	1.01
41	Dipali Arvind Gore	Public	Preference	1,000	1.01
42	Anup Dadarao Naikwadi	Public	Preference	1,000	1.01
43	Nitin Netaji Bhosale	Public	Preference	1,000	1.01
44	Daji Navnath Pawar	Public	Preference	1,000	1.01
45	Mangesh Prabhakar Kulkarni	Promoter Group	Preference	1,000	1.01
46	Pornima Rajkumar Jadhav	Public	Preference	1,000	1.01
47	Pravin Netaji Bhosale	Public	Preference	1,000	1.01
48	Jaya Nitin Bhosale	Public	Preference	1,000	1.01
49	Nakul Santosh Kulkarni	Public	Preference	1,000	1.01
50	Sushilkumar Dattatray Joshi	Public	Preference	1,000	1.01
51	Somesh Radhakrishna Kulkarni	Public	Preference	1,000	1.01

**The Shares comprises of Equity Shares of Face Value ₹ 100/- each and Preference Shares of Face Value of ₹ 1,000/- each respectively.*

***The percentage is calculated based on total Equity and Preference Share capital in terms of value.*

Notes:

(1) Details of shares held on July 09, 2025

(2) There are no vested outstanding options

d) Particulars of the shareholders holding 1% or more of the paid-up share capital of our Company and the number of shares held by them two (02) years prior to the date of this Draft Red Herring Prospectus:

Sr. No.	Name of Shareholders	Category	Type of Share	Number of Shares*	% of the Pre-Issue share capital**
1	Dipali Dattatraya Kulkarni	Promoter	Equity	3,85,000	39.90
			Preference	1,000	
2	Dattatray Kashinath Kulkarni	Promoter	Equity	5,000	1.52
			Preference	1,000	
3	Dinesh Mukund Kulkarni	Public	Equity	1,00,000	10.10
4	Pranav Pramod Kulkarni	Public	Preference	1,000	1.01
5	Pramod Shmrao Kulkarni	Public	Preference	1,000	1.01
6	Virakshi Pranav Kulkarni	Public	Preference	1,000	1.01

7	Rushikeash Ramesh Bhad	Public	Preference	1,000	1.01
8	Ramesh Nagnath Bhad	Public	Preference	1,000	1.01
9	Shubham Vishwanatah Mindhe	Public	Preference	1,000	1.01
10	Dhanaji Tanaji Suryvanshi	Public	Preference	1,000	1.01
11	Amruta Milind Kulkarni	Public	Preference	1,000	1.01
12	Milind Nagnath Kulkarni	Public	Preference	1,000	1.01
13	Radhika Bhagavant Kulkarni	Public	Preference	1,000	1.01
14	Bhagvant Ramrao Kulkarni	Public	Preference	1,000	1.01
15	Ganesh Ashok Kamate	Public	Preference	1,000	1.01
16	Ashok Ramdas Kamate	Public	Preference	1,000	1.01
17	Arvind Ashok Gore	Public	Preference	1,000	1.01
18	Aksh Ashok Gore	Public	Preference	1,000	1.01
19	Nitin Madanrao Humbe	Public	Preference	1,000	1.01
20	Bhimrao Devaba Shinde	Public	Preference	1,000	1.01
21	Shankar Devaba Shinde	Public	Preference	1,000	1.01
22	Indrajit Shankar Shinde	Public	Preference	1,000	1.01
23	Avinash Dattu Londhe	Public	Preference	1,000	1.01
24	Vikas Laxman Madake	Public	Preference	1,000	1.01
25	Rajabhau Vitthal Poul	Public	Preference	1,000	1.01
26	Khandu Nagnath Jadhav	Public	Preference	1,000	1.01
27	Mahadev Siddhppa Fulari	Public	Preference	1,000	1.01
28	Pranav Pramod Devale	Public	Preference	1,000	1.01
29	Pramod Ramchandr Devale	Public	Preference	1,000	1.01
30	Ranajit Shivaji Bhore	Public	Preference	1,000	1.01
31	Sachin Shrihari Bhosale	Public	Preference	1,000	1.01
32	Yogesh Vishnupant Kulkarni	Public	Preference	1,000	1.01
33	Kishor Rangnath Godase	Public	Preference	1,000	1.01
34	Balaji Ashok Jadhav	Public	Preference	1,000	1.01
35	Pornima Balaji Jadhav	Public	Preference	1,000	1.01
36	Shrinath Ramesh Nalawade	Public	Preference	1,000	1.01
37	Supriya Rushikesh Bhingare	Public	Preference	1,000	1.01
38	Vyanktesh Pandurang Kore	Public	Preference	1,000	1.01
39	Priya Pramod Devale	Public	Preference	1,000	1.01
40	Ramchandr Baburao Sarade	Public	Preference	1,000	1.01
41	Dipali Arvind Gore	Public	Preference	1,000	1.01
42	Anup Dadarao Naikwadi	Public	Preference	1,000	1.01
43	Nitin Netaji Bhosale	Public	Preference	1,000	1.01
44	Daji Navnath Pawar	Public	Preference	1,000	1.01
45	Mangesh Prabhakar Kulkarni	Promoter Group	Preference	1,000	1.01
46	Pornima Rajkumar Jadhav	Public	Preference	1,000	1.01
47	Pravin Netaji Bhosale	Public	Preference	1,000	1.01
48	Jaya Nitin Bhosale	Public	Preference	1,000	1.01
49	Nakul Santosh Kulkarni	Public	Preference	1,000	1.01
50	Sushilkumar Dattatray Joshi	Public	Preference	1,000	1.01
51	Somesh Radhakrishna Kulkarni	Public	Preference	1,000	1.01

**The Shares comprises of Equity Shares of Face Value ₹ 100/- each and Preference Shares of Face Value of ₹ 1,000/- each respectively.*

***The percentage is calculated based on total Equity and Preference Share capital in terms of value.*

Notes:

(1) Details of shares held on July 09, 2024

(2) There are no vested outstanding options

e) Our Company has not made any public issue since its incorporation.

f) As on the date of this Draft Red Herring Prospectus, our Company does not have any intention or proposal to alter its capital structure within a period of six (06) months from the date of opening of the Issue by way of split/consolidation of the denomination of Equity Shares or by Issue of Equity Shares whether preferential or bonus, rights, or by way of further public issue. However, our Company may raise further capital if the Board of Directors of our Company are of the opinion that our Company needs further funds subject to the necessary approvals.

11. History of the Share capital held by our Promoters:

As on the date of this Draft Red Herring Prospectus, the Promoters of our Company, hold 1,22,49,875 Equity Shares, equivalent to almost 100% of the pre-IPO issued, subscribed and paid-up Equity Share Capital of our Company and none of the Equity Shares held by the Promoter are subject to any pledge.

All the Equity Shares held by our Promoters, as detailed below, were fully paid-up on the respective dates of allotment of such Equity Shares.

A. Set forth below are the details of the build – up of our Promoters' Equity Shareholding in our Company since incorporation:

a. Dipali Dattatraya Kulkarni

Date of Allotment/ Acquisition / Transfer	Number of Equity Shares	Face Value per Equity Share (₹)	Issue/ Transfer Price per Equity Share (₹)	Nature of Consideration	Nature of Transaction	Cumulative No. of Shares	Pre-issue Share Holding %	Post-issue Share Holding %
On Incorporation i.e., June 24, 2022	5,000	100/-	100/-	Cash	Subscription to MOA	5,000	NA	NA
March 22, 2024	3,80,000	100/-	100/-	Cash	Private Placement	3,85,000	NA	NA
January 23, 2026	Pursuant to Special Resolution passed at the Extra Ordinary General Meeting held on January 23, 2026, Equity Shares of face value of ₹100/- each of our Company were sub-divided into Equity Shares of face value of ₹10/- each. Accordingly, the cumulative number of issued, subscribed and paid-up equity shares held by Mrs. Dipali Dattatraya Kulkarni pursuant to sub-division became 38,50,000 Equity Shares of face value of ₹10/- each.							
June 24, 2026	57,75,000	10/-	Nil	Other than Cash	Bonus Issue	96,25,000	78.57	51.07
Total						**96,25,000**	**78.57**	**51.07**

b. Dattatray Kashinath Kulkarni

Date of Allotment/ Acquisition / Transfer	Number of Equity Shares	Face Value per Equity Share (₹)	Issue/ Transfer Price per Equity Share (₹)	Nature of Consideration	Nature of Transaction	Cumulative No. of Shares	Pre-issue Share Holding %	Post-issue Share Holding %
On Incorporation i.e., June 24, 2022	5,000	100/-	100/-	Cash	Subscription to MOA	5,000	NA	NA
January 23, 2026	Pursuant to Special Resolution passed at the Extra Ordinary General Meeting held on January 23, 2026, Equity Shares of face value of ₹100/- each of our Company were sub-divided into Equity Shares of face value of ₹10/- each. Accordingly, the cumulative number of issued, subscribed and paid-up equity shares held by Mr. Dattatray Kashinath Kulkarni pursuant to sub-division became 50,000 Equity Shares of face value of ₹10/- each.							
January 29, 2026	9,99,950	10/-	Nil	Transfer via Gift	Transfer of Shares from Dinesh Mukund Kulkarni	10,49,950	8.57	5.57
June 24, 2026	15,74,925	10/-	Nil	Other than Cash	Bonus Issue	26,24,875	21.43	13.93
Total						**26,24,875**	**21.43**	**13.93**

(The rest of the page is intentionally left blank)

B. Set forth below are the details of the build – up of our Promoters' Preference Shareholding in our Company since incorporation:

a. Dipali Dattatraya Kulkarni

Date of Allotment/ Acquisition / Transfer	Number of Preference Shares	Face Value per Preference Share (₹)	Issue/ Transfer/ Redemption Price per Preference Share (₹)	Nature of Consideration	Nature of Transaction	Cumulative No. of Shares	Pre-issue Share Holding %	Post-issue Share Holding %
October 16, 2023	1,000	1,000/-	1,000/-	Cash	Private Placement	1,000	NA	NA
December 29, 2025	(1000)	1,000/-	1,000/-	Cash	Redemption	Nil	NA	NA
Total						**Nil**		

b. Dattatray Kashinath Kulkarni

Date of Allotment/ Acquisition / Transfer	Number of Preference Shares	Face Value per Preference Share (₹)	Issue/ Transfer/ Redemption Price per Preference Share (₹)	Nature of Consideration	Nature of Transaction	Cumulative No. of Shares	Pre-issue Share Holding %	Post-issue Share Holding %
October 16, 2023	1,000	1,000/-	1,000/-	Cash	Private Placement	1,000	NA	NA
December 29, 2025	(1000)	1,000/-	1,000/-	Cash	Redemption	Nil	NA	NA
Total						**Nil**		

12. As on the date of this Draft Red Herring Prospectus, our Company has 7 Shareholders.

13. Shareholding of our Promoters and Promoter Group

The details of shareholding of our Promoters, and the Promoter Group as on the date of this Draft Red Herring Prospectus are set forth below:

Particulars	Pre-Issue		Post-Issue	
	Number of Equity Shares of face value ₹ 10/- each	%	Number of Equity Shares of face value ₹ 10/- each	%
Promoter				
Dipali Dattatraya Kulkarni	96,25,000	78.57	96,25,000	51.07
Dattatray Kashinath Kulkarni	26,24,875	21.43	26,24,875	13.93
Total (A)	**1,22,49,875**	**100.00**	**1,22,49,875**	**65.00**
Promoter Group				
Mangesh Prabhakar Kulkarni	25	Negligible	25	Negligible
Krushna Dattatrya Kulkarni	25	Negligible	25	Negligible
Total (B)	**50**	**Negligible**	**50**	Negligible
Total Promoter & Promoter Group (A+B)	**1,22,49,925**	**100.00**	**1,22,49,925**	**65.00**

For risk associated with respect to significant shareholding of our promoter and promoter group in our company post this issue kindly refer to Risk Factor No 48 mentioned in Section titled 'Risk Factors' beginning on page no. 49 of this Draft Red Herring Prospectus.

(The rest of the page is intentionally left blank)

14. Details of shareholding of our Directors and KMPs:

Sr No.	Name of Director/KMP	Designation	No. of Equity Share of face value ₹ 10/- each	% of Pre-Issue Equity Share Capital
1	Dipali Dattatraya Kulkarni	Managing Director	96,25,000	78.57
2	Dattatray Kashinath Kulkarni	Executive Director cum Chief Financial Officer	26,24,875	21.43
3	Brijesh Jaynarayan Didvaniya	Independent Director	Nil	Nil
4	Mahesh Ashok Nannor	Independent Director	Nil	Nil
5	Sachin Balajirao Ramgirwar	Independent Director	Nil	Nil
8	Pearl Santosh Dsouza	Company Secretary & Compliance Officer	Nil	Nil

15. Except as provided below, no Shares were acquired/ purchased/ sold by the Promoter / Promoter Group / the Directors of our company which is a promoter of our Company / the Directors of our Company and their relatives within three years immediately preceding the date of this Draft Red Herring Prospectus.

Nature of Transaction	Date of Allotment/ Transfer/Redemption	Name of Allottee/ Transferor and Transferee/	Number of shares	Transaction Price per Share (₹)	Category of Promoters/ Promoter Group/ Director
Private Placement	March 23, 2024	Dipali Dattatraya Kulkarni	3,80,000	100/-	Promoter and Managing Director
Redemption of preference Shares	December 29, 2025	Dipali Dattatraya Kulkarni	1,000	1,000/-	Promoter and Managing Director
		Dattatray Kashinath Kulkarni	1,000	1,000/-	Promoter and Executive Director cum Chief Financial Officer
		Mangesh Prabhakar Kulkarni	1,000	1,000/-	Promoter Group
Transfer	January 29, 2026	**Transferor**: Dinesh Mukund Kulkarni **Transferee:** Dattatray Kashinath Kulkarni	9,99,950	Nil, Transfer via gift	**Transferor:** Public **Transferee:** Promoter and Executive Director cum Chief Financial Officer
	January 29, 2026	**Transferor**: Dinesh Mukund Kulkarni **Transferee:** Mangesh Prabhakar Kulkarni	10	345.34/-	**Transferor:** Public **Transferee:** Promoter Group
	January 29, 2026	**Transferor**: Dinesh Mukund Kulkarni **Transferee:** Krushna Dattatrya Kulkarni	10	345.34/-	**Transferor:** Public **Transferee:** Promoter Group
Bonus Issue	June 24, 2026	Dipali Dattatraya Kulkarni	57,75,000	Nil	Promoter and Managing Director
		Dattatray Kashinath Kulkarni	15,74,925	Nil	Promoter and Executive Director cum Chief Financial Officer
		Mangesh Prabhakar Kulkarni	15	Nil	Promoter Group
		Krushna Dattatrya Kulkarni	15	Nil	Promoter Group

16. There are no financing arrangements whereby the promoter, promoter group, the directors of our Company and their relatives have financed the purchase by any other person of the Equity Shares of our Company other than in the normal course of business of the financing entity, if any, during the period of six months, immediately preceding the date of this Draft Red Herring Prospectus.

17. Cost of Acquisition:

a. Average Cost of Acquisition:

The average cost of acquisition of Equity Shares for our Promoter as on the date of this Draft Red Herring Prospectus is as set out below:

Name of the Promoters	Average cost of acquisition per share (₹)
Dattatray Kashinathrao Kulkarni	0.19
Dipali Dattatraya Kulkarni	4.00

** As certified by Statutory Auditor, M/s. A N Gawade & Co. LLP, Chartered Accountants, by way of their certificate dated July 10, 2026.*

b. Weighted Average Cost of Acquisition by Promoters in last one year:

Name of the Promoters	Weighted Average Cost of Acquisition per Equity Share in the last one year (in ₹)
Dattatray Kashinathrao Kulkarni	Nil
Dipali Dattatraya Kulkarni	Nil

** As certified by Statutory Auditor, M/s. A N Gawade & Co. LLP, Chartered Accountants, by way of their certificate dated July 10, 2026.*

c. Weighted average cost of acquisition of all shares transacted in last 1 year, 18 months and 3 years, from the date of this Draft Red Herring Prospectus, by the Promoters, Promoter Group and Selling Shareholders, if any:

Period	No. of Shares Transacted [(1)]	Weighted average cost of acquisition per Equity Share (in ₹)[#*]
Last 1 year	20	345.34
Last 18 Months	20	345.34
Last 3 years	48,00,020	10.00

Note: [(1)] excluding Gift & Bonus issue.
** As certified by Statutory Auditor, M/s. A N Gawade & Co. LLP, Chartered Accountants, by way of their certificate dated July 10, 2026.*

18. Promoter's Contribution and Lock-in details:

a. Details of Promoter' contribution locked in for three years.

Pursuant to Regulation 236 & 238 of the SEBI (ICDR) Regulations, an aggregate of at least 20% of the post Issue Equity Share capital of our Company held by our Promoter shall be considered as Promoter's contribution ("Promoter Contribution") and locked in for a period of three years from the date of Allotment. Our Promoter have granted consent to include such number of Equity Shares held by them as may constitute 20% of the post issue Equity Share capital of our Company as Promoter Contribution and have agreed not to sell or transfer or pledge or otherwise dispose of in any manner, the Promoter Contribution from the date of this Draft Red Herring Prospectus until the commencement of the lock-in period specified above. Details of the Equity Shares forming part of Promoter Contribution and proposed to be locked in for a period of three years are as follows:

(The rest of the page is intentionally left blank)

b. The details of lock-in of shares for 3 (three) years are as under:

Date of Allotment / Acquisition of fully paid-up Shares	Date when made Fully paid up	Nature of Transaction	No. of Equity Shares	Face Value (₹)	Issue Price / Acquisition Price (₹)	% of Pre-Issue Equity Share Capital	% of Post-Issue Equity Share Capital	Lock in Period
Dipali Dattatraya Kulkarni								
June 24, 2026	June 24, 2026	Bonus Issue	38,00,000	10/-	NIL	31.02	20.16	3 Years, upto [●]
Total			38,00,000	10/-		31.02	20.16	

The minimum Promoter's contribution has been brought in to the extent of not less than the specified minimum lot and from persons defined as "Promoter" under the SEBI (ICDR) Regulations. All Equity Shares, which are being locked in are not ineligible for computation of Minimum Promoters Contribution as per Regulation 237 of the SEBI (ICDR) Regulations and are being locked in for 3 years as per Regulation 238(a) of the SEBI (ICDR) Regulations i.e. for a period of three years from the date of allotment of Equity Shares in this Issue.

ELIGIBILITY OF SHARE FOR "MINIMUM PROMOTERS CONTRIBUTION IN TERMS OF CLAUSES OF REGULATION 237(1) OF SEBI (ICDR) REGULATIONS, 2018

Reg. No.	Promoters' Minimum Contribution Conditions	Eligibility Status of Equity Shares forming part of Promoter's Contribution
237(1) (a) (i)	Specified securities acquired during the preceding three years, if they are acquired for consideration other than cash and revaluation of assets or capitalization of intangible assets is involved in such transaction	The minimum Promoter's contribution does not consist of such Equity Shares. **Hence Eligible**
237 (1) (a) (ii)	Specified securities acquired during the preceding three years, resulting from a bonus issue by utilization of revaluation reserves or unrealized profits of the issuer or from bonus issue against Equity Shares which are ineligible for minimum promoters' contribution	The minimum Promoter's contribution does not consist of such Equity Shares. **Hence Eligible**
237 (1) (b)	Specified securities acquired by promoters during the preceding one year at a price lower than the price at which specified securities are being issued to public in the initial public issue	The minimum Promoter's contribution does not consist of such Equity Shares. **Hence Eligible**.
237(1) (c)	Specified securities allotted to promoters during the preceding one year at a price less than the issue price, against funds brought in by them during that period, in case of an issuer formed by conversion of one or more partnership firms or limited liability partnerships, where the partners of the erstwhile partnership firms or limited liability partnerships are the promoters of the issuer and there is no change in the management: Provided that specified securities, allotted to promoters against capital existing in such firms for a period of more than one year on a continuous basis, shall be eligible	The minimum Promoter's contribution does not consist of such Equity Shares. **Hence Eligible**.
237 (1) (d)	Specified securities pledged with any creditor.	Our Promoters have not pledged any shares with any creditors. Accordingly, the minimum Promoter's contribution does not consist of such Equity Shares. **Hence Eligible**.

c. Details of Promoter' Contribution locked in for One Year and Two Years:

In terms of Regulation 238(b) of the SEBI (ICDR) Regulations, 2018 and SEBI (ICDR) (Amendment) Regulations, 2025, in addition to the Minimum Promoters contribution which is locked in for three years held by the promoters, as specified above, 42,24,938 Equity Shares shall be locked in for a period of two year and remaining 42,24,937 Equity Shares shall be locked in for a period of one years from the date of allotment of Equity Shares in this Issue.

19. Details of Pre-Issue Equity Shares held by persons other than the promoters locked in for one year:

In terms of Regulation 239 of the SEBI (ICDR) Regulations, 2018, in addition to the Minimum Promoters Contribution as per regulation 238 of the SEBI (ICDR) Regulations, 2018, the entire pre-issue equity shares held by persons other than the promoters consisting of 125 Equity Shares shall be locked in for a period of one year from the date of allotment of Equity Shares in this Issue.

20. Inscription or Recording of Non-Transferability:

In terms of Regulation 241 of the SEBI ICDR Regulations, our Company confirms that our Company shall ensure that the lock - in is recorded by the Depository.

21. Pledge of Locked in Equity Shares held by our Promoters:

Pursuant to Regulation 242 of the SEBI ICDR Regulations, the locked-in Equity Shares held by our Promoters can be pledged with any scheduled commercial bank or public financial institution or systematically important non-banking finance company or a housing finance company as collateral security for loans granted by them, provided that:

a) if the equity shares are locked-in in terms of clause (a) of Regulation 238, the loan has been granted to our company or our subsidiary(ies) for the purpose of financing one or more of the objects of the Issue and pledge of equity shares is one of the terms of sanction of the loan;

b) if the specified securities are locked-in in terms of clause (b) of Regulation 238 and the pledge of specified securities is one of the terms of sanction of the loan.

Provided that such lock-in shall continue pursuant to the invocation of the pledge and such transferee shall not be eligible to transfer the equity shares till the lock-in period stipulated in these regulations has expired.

22. Transferability of Locked in Equity Shares

a) Pursuant to Regulation 243 of the SEBI (ICDR) Regulations, Equity Shares held by our Promoters, which are locked in as per Regulation 238 of the SEBI (ICDR) Regulations, may be transferred to and amongst our Promoters/ Promoter Group or to a new promoter or persons in control of our Company subject to continuation of the lock-in in the hands of the transferees for the remaining period and compliance with SEBI (SAST) Regulations as applicable.

b) Pursuant to Regulation 243 of the SEBI (ICDR) Regulations, Equity Shares held by shareholders other than our Promoters, which are locked-in as per Regulation 239 of the SEBI (ICDR) Regulations, may be transferred to any other person holding shares, subject to continuation of the lock-in in the hands of the transferee for the remaining period and compliance with SEBI (SAST) Regulations as applicable.

23. Our Company, its Promoter, Directors and the Book Running Lead Manager have not entered into any buyback arrangements or any other similar arrangements for the purchase of Equity Shares of the Issuer being issued through the Issue.

24. There are no partly paid-up Equity Shares as on the date of this Draft Red Herring Prospectus. Further, since the entire money in respect of the issue is being called on application, all the successful Applicants will be issued fully paid-up Equity Shares. All Equity Shares issued pursuant to the issue shall be fully paid-up at the time of Allotment.

25. As on the date of this Draft Red Herring Prospectus, the Book Running Lead Manager and their respective associates (as defined under the SEBI (Merchant Bankers) Regulations, 1992) do not hold any Equity Shares of our Company. The Book Running Lead Manager and their affiliates may engage in the transactions with and perform services for our Company in the ordinary course of business or may in the future engage in commercial banking and investment banking transactions with our Company for which they may in the future receive customary compensation. Further our Company, our directors and our shareholders are not directly/indirectly related with Book Running Lead Managers and their associates.

26. The Post-Issue paid up Equity Share Capital of our Company shall not exceed authorized Equity Share Capital of our Company.

27. No person connected with the Issue, including, but not limited to, our Company, the members of the Syndicate, or the Directors of our Company, shall offer any incentive, whether direct or indirect, in any manner, whether in cash or kind or services or otherwise to any Applicant for making an Application, except for fees or commission for services rendered in relation to the Issue.

28. We hereby confirm that the existing paid-up Equity Shares of our Company are held in dematerialized form. Further, the Equity Shares issued under this Issue shall also be issued in Dematerialized mode only.

29. We hereby confirm that there will be no issue of Equity Shares whether by the way of issue of bonus shares, preferential allotment, rights issue or in any other manner during the period commencing from the date of this Draft Red Herring Prospectus until the Equity Shares have been listed on the Stock Exchange or all application monies have been refunded, as the case may be.

30. Our Company has no outstanding warrants, options to be issued or rights to convert debentures, loans, or other convertible instruments into Equity Shares as on the date of this Draft Red Herring Prospectus.

31. None of the Equity Shares held by the Promoters and members of the Promoter Group are pledged or otherwise encumbered.

32. There shall be only one denomination of the Equity Shares, unless otherwise permitted by law. Our Company will comply with such disclosure and accounting norms as may be specified by SEBI from time to time.

33. Our Company shall ensure that transactions in the Equity Shares by our Promoters and our Promoter Group between the date of this Draft Red Herring Prospectus and the Issue Closing Date shall be reported to the Stock Exchange within 24 hours of such transaction.

34. Our Promoter and the members of our Promoter Group will not participate in the Issue.

35. We confirm that as on the date of this DRHP, no entity/person has any special right under the Articles of Association of our Company. Further we confirm that there are no subsisting shareholders agreement by and between our Company and our shareholders as on the date of this DRHP.

36. Our Company is in compliance with the Companies Act 2013, to the extent applicable, with respect to the issuance of securities from the date of incorporation of our Company till the date of this Draft Red Herring Prospectus, except w.r.t. to the allotment of securities via Private Placement, dated March 22, 2024 *For details in relation to the non-compliance w.r.t. the aforesaid Private Placement, kindly refer Risk Factor No. 9 under the Section titled "Risk Factors" beginning on page no. 30 of this Draft Red Herring Prospectus.*

(The rest of the page is intentionally left blank)

SECTION IV: PARTICULARS OF THE ISSUE

OBJECTS OF THE ISSUE

The Issue comprises of a Fresh Issue of upto 65,96,000 Equity shares of face value ₹ 10/- per share, at an issue price of ₹[●] per Equity Share, aggregating upto ₹ [●] Lakhs by our Company. Our Company proposes to utilize the Net Proceeds from the Issue towards the below mentioned objects, which has been approved by the Board of Directors of our Company at their meeting held on July 10, 2026:

1. **Capital Expenditures**
2. **Pre-payment/re-payment of, in part or full, certain outstanding borrowings**
3. **General Corporate Purposes**

Our Company believes that listing will enhance our company's corporate image, visibility and create a public market for its equity shares in India besides unlocking the value of our Company. Having a listing on a stock exchange also affords our company increased credibility with the public, having our company indirectly endorsed through having their stock traded on the exchange. It also Improves supplier, investor and customer confidence and improves our standing in the marketplace. It will also provide liquidity to the existing shareholders

The main Objects Clause of our Memorandum of Association enable our Company to undertake the activities for which funds are being raised though this Issue. The existing activities of our Company are within the Objects Clause of our Memorandum of Association.

ISSUE PROCEEDS

The proceeds of the Issue, after deducting Issue related expenses, are estimated to be ₹ [●] Lakhs (the "Net Issue Proceeds").

The following table summarizes the requirement of funds:

Particulars	Estimated Amount (₹ in lakh)
Gross Proceeds from the Fresh Issue	[●]
(Less) Issue Related Expenses[1]	[●]
Net Proceeds	[●]

**To be finalized on determination of the Issue Price and updated in the Prospectus prior to filing with the ROC.*

REQUIREMENT OF FUNDS

Our funding requirements are dependent on several factors which may not be under the control of our management, viz., changes in our financial condition and/or current commercial conditions. Such factors may entail rescheduling and/or revising the planned expenditure and funding requirement and increasing or decreasing the expenditure for a particular purpose from the planned expenditure.

The following table summarizes the requirements of the fund:

Sr. No.	Particulars	₹ In Lakhs
1.	Capital expenditures	2,354.10
2.	Pre-payment/re-payment, in part or full, of certain outstanding borrowings	3,750.00
3.	General Corporate Expenses	[●]
Total		[●]

The fund requirements, the deployment of funds and the intended use of the Net Proceeds as described hereinabove are based on our current business plan, management estimates and other commercial and technical factors. Given the dynamic nature of our business, we may have to revise our expenditure and fund requirement as a result of variations in cost estimates on account of variety of factors such as changes in our financial condition, business or strategy as well as external factors which may not be in our control and may entail rescheduling and revising the planned expenditure and funding requirement and increasing or decreasing the expenditure for a particular purpose from the planned expenditure at the discretion of our Management.

These fund requirements have not been appraised by any bank, financial institution or any other external agency. Our Company may have to revise its funding requirements and deployment on account of a variety of factors, including but not limited to our financial and market condition, business and strategy, competition, interest or exchange rate fluctuations and other external factors, which may not be within the control of our Management.

This may entail rescheduling or revising the planned expenditure and funding requirements, including the expenditure for a particular purpose at the discretion of our Management, subject to applicable law. *[For risk associated with respect to project not being appraised by independent agency kindly refer to Risk Factor No 18 mentioned in Section titled 'Risk Factors' beginning of page no. 38 of this Draft Red Herring Prospectus.]* The deployment of funds in the project is entirely at our discretion, based on the parameters as mentioned in the chapter titles "Objects of the Issue".

In the event of any shortfall of funds for the activities proposed to be financed out of the Net Proceeds as stated above, our Company may re-allocate the Net Proceeds to the activities where such shortfall has arisen, subject to availability and compliance with applicable laws. Further, in case of shortfall in the Net Proceeds or cost overruns, our management may explore a range of options including utilizing our internal accruals or seeking additional equity and/or debt arrangements from existing and future lenders or any combination of them. If the actual utilisation towards any of the Objects is lower than the proposed deployment such balance will be used for (i) General Corporate Purposes to the extent that the total amount to be utilised towards General Corporate Purposes will not exceed 15% or ₹ 1000 Lakhs (whichever is less) of the Gross Proceeds in accordance with the SEBI ICDR Regulations; or (ii) towards Working Capital, at the discretion of the Management of our Company and in compliance with applicable laws.

In case of any surplus after utilization of the Net Proceeds for the stated objects, including any surplus unutilized from\w.r.t., Issue related expenses, we may utilize it towards (i) general corporate purposes to the extent that the total amount to be utilised towards General Corporate Purposes will not exceed 15% or ₹ 1000 Lakhs (whichever is less) of the Gross Proceeds in accordance with the SEBI ICDR Regulations; or (ii) towards Working Capital, at the discretion of the Management of our Company and in compliance with applicable laws.

To the extent our Company is unable to utilize any portion of the Net Proceeds towards the aforementioned Objects of the Issue, as per the estimated schedule of deployment specified below, our Company shall deploy the Net Proceeds in subsequent financial years towards the aforementioned Objects.

PROPOSED SCHEDULE OF IMPLEMENTATION AND UTILIZATION OF NET PROCEEDS

We propose to deploy the Net Proceeds for the aforementioned Objects of the Issue in accordance with the estimated schedule of implementation and deployment of funds set forth in the table below:

(₹ In Lakhs)

Particulars	Amount to be funded from Net Proceeds	Estimated schedule of deployment of Net Proceeds	
		FY 2026-2027	FY 2027-2028
Capital expenditures	2,354.10	800.00	1,554.10
Pre-payment/re-payment, in part or full, of certain outstanding borrowings	3,750.00	3,750.00	[●]
General Corporate Expenses	[●]	[●]	[●]
Total	[●]	[●]	[●]

Our fund requirements and proposed deployment of the Net Proceeds are based on our internal management estimates as per our business plan based on current circumstances of our business prevailing market conditions which are subject to change. Further, such fund requirements and proposed deployment of funds have not been appraised by any bank or financial institution or any other independent agency. We may need to revise our estimates from time to time in light of various factors such as changes in costs, our financial condition, business and strategy or external circumstances such as market conditions, the economic conditions, changing regulatory policies, prevailing competitive environment, interest rate fluctuations, which may not be in our control. This may entail rescheduling the proposed utilization of the Net Proceeds and changing the allocation of funds from our planned allocation at the discretion of our management, subject to compliance with applicable laws. In the event that the estimated utilization out of the Net Proceeds in a Fiscal year is not met (in part or full), such an unutilized amount shall be utilized in the succeeding Fiscal years, as determined by our Company, in accordance with applicable law. This may entail rescheduling and revising the planned expenditure and funding requirement and increasing or decreasing the expenditure for a particular purpose from the planned expenditure at the discretion of our management, subject to compliance with applicable law.

As per Management estimation, the total amount proposed to be utilized from the IPO Proceeds for the abovementioned purpose is to be deployed by March 31, 2028. If the Net Proceeds towards any of the Objects are not completely utilized towards such objects by March 31, 2028, such amounts will be utilized (in part or

full) in subsequent periods as determined by the Board of Directors of our Company, in accordance with applicable law.

Any expenditure, after filing of the Draft Red Herring Prospectus till the listing of securities, for the above-mentioned objects, will be reimbursed to our Company on actually basis from the IPO Proceeds.

[For risk associated with respect to variation in utilisation of net proceeds kindly refer to Risk Factor No 19 mentioned in Section titled 'Risk Factors' beginning of page no. 38 of this Draft Red Herring Prospectus.]

MEANS OF FINANCE

Our Company proposes to meet the entire requirement of funds for the objects of the Issue from the following means.

1. Issue of Equity Shares through this Draft Red Herring Prospectus.
2. Internal Accruals of our Company.

The requirements of the objects detailed above are intended to be funded from the Proceeds of the Issue. Accordingly, we confirm that there is no requirement for us to make firm arrangements of finance under Regulation 230(1)(e) and 9 (C) of Part A of Schedule VI of SEBI (ICDR) Regulations, through verifiable means towards at least 75% of the stated means of finance, excluding the amount to be raised from the proposed public issue or through existing identifiable internal accruals.

These fund requirements have not been appraised by any bank, financial institution or any other external agency. Our Company may have to revise its funding requirements and deployment on account of a variety of factors, including but not limited to our financial and market condition, business and strategy, competition, interest or exchange rate fluctuations and other external factors, which may not be within the control of our Management. This may entail rescheduling or revising the planned expenditure and funding requirements, including the expenditure for a particular purpose at the discretion of our Management, subject to applicable law. *[For risk associated with respect to project not being appraised by independent agency kindly refer to Risk Factor No 18 mentioned in Section titled 'Risk Factors' beginning of page no. 38 of this Draft Red Herring Prospectus.]* The deployment of funds in the project is entirely at our discretion, based on the parameters as mentioned in the chapter titles "Objects of the Issue".

In case of variations in the actual utilization of funds allocated for the purposes set forth above, increased fund requirements for a particular purpose may be financed by surplus funds, if any, available in respect of the other purposes for which funds are being raised in this Issue. If surplus funds are unavailable, the required financing will be through our internal accruals. In case of any such re-scheduling, it shall be made in compliance of the relevant provisions of the Companies Act, 2013.

DETAILS OF THE OBJECTS OF THE ISSUE

1. CAPITAL EXPENDITURES:

From the proceeds of the IPO, our Company proposes to undertake the expansion of our manufacturing plant by increasing the sugarcane crushing capacity from 1,250 TCD (Metric Tonnes Crushed per Day) to 2,000 TCD. The intended expansion is proposed considering that our Company has been utilising ~ 90% (average) of its existing crushing capacity. This capacity expansion is expected to enhance the operational efficiency of the plant and enable our Company to process a significantly higher volume of sugarcane during the crushing season. Consequently, the production of Jaggery Powder & Khandsari Sugar and other by-products is expected to increase proportionately, subject to the availability of adequate sugarcane and prevailing market conditions.

It is herewith stated that our Company has license to crush 1,500 TCD of Sugarcane for the purpose of production of Jaggery Powder and crush 900 TCD of Sugarcane for the purpose of production of Khandsari Sugar.

Thus, with the proposed expansion our company will be able to process more Sugarcane to increase the production of both its main products i.e., Jaggery Powder & Khandsari Sugar and its by-products i.e., Bagasse, Molasses, Press-mud & Ash.

For details with respect to the history of our Company in setting up our existing manufacturing facility kindly refer heading titled "Capacity/ Facility Creation, Location of Plants" under the Chapter titled "Our History and Certain Corporate Matters" beginning on page no. 194 of the Draft Red Herring Prospectus.

The increase in production capacity is anticipated to support higher sales volumes, resulting in an increase in revenue from operations and, consequently, an improvement in our Company's profitability and profit after tax.

In connection with the proposed capacity expansion, our Company has finalized a quotation dated June 19, 2026, received from M/s. N.R. Fabricators and Erectors, for the design, manufacturing, supply, erection and commissioning of milling house & boiling house equipment required for the upgraded crushing capacity. The Sr. No. 1 of the appended quotation is proposed to be funded from the net proceeds of the IPO whereas the cost related to Sr. 2 to 6 of the appended quotation will be borne by our Company from internal accruals or GCP, as the case may be.

The detailed component of the estimated cost is provided below:

S. No.	Particular	Qty	₹ in Lakhs
1	Design, drawing, fabrication, supply erection and commissioning of milling house & boiling house equipments with addition, modification and expansion from 1,250 TCD to 2,000 TCD Manufacturing Plant.	1 Set	1,995.00
	- Milling House Equipment's		
	- Boiling House Equipment's		
Sub-Total			**1,995.00**
GST @ 18%			**359.10**
Grand Total			**2,354.10**
2	Supply of staging, structure, Fabricated and ERW piping	As required	₹ 100/- per kg
3	Erection of staging, structure, ERW & Fabricated Piping	As required	₹ 17/- per kg
4	Dismantling of old equipment	As required	₹ 12/- per kg
5	Fabrication of old and new material	As required	₹ 17/- per kg
6	Karkhana *(Shree Siddhivinayak Greentech Industries Limited)* old & New material Erection	As required	₹ 19/- per kg

Notes:

1. Lodging facility to be provided to our erection crew & Boarding to our Engineer by Kharkhana free of cost
2. Electricity & water supply will be provided by Kharkhna at free of cost for Erection
3. Required all civil foundation work in Kharkhana scope
4. Factory Lighting Factory Building in Kharkhana scope
5. Sugar conveying system and sugar godown in Kharkhana scope
6. Air conditioning & control cabin, UPS for new equipment in Kharkhana scope
7. Effluent treatment plan in Kharkhana scope
8. Laboratory required for analysis in Kharkhana scope
9. For Brought out & loose material store will be provided by Kharkhana free of cost
10. All Government formalities with sanction in Kharkhana scope
11. Material prices are based on prevailing market rates and may vary. Accordingly, the rates applicable at the time of issuance of the Purchase Order shall be charged.

General Terms and Conditions:

1. Transport – Including upto Karkhana
2. Taxes – Extra at actual as per GST Rule
3. Delivery Period – 8 to 10 months after receipt of Purchase order & from the completion of the civil foundation work
4. Validity of Rate – 6 months

Payment Terms:

1) 40% Advance with Purchase Order
2) 60% + 100% GST against Proforma Invoice

Equipment list for 1,250 to 2,000 TCD

S. No.	Description (Milling House)	Qty
1	Cane Carrier Drive to be Change with 60 Hp power	1 no.
2	Leveler Power to be added at other side 120 HP	1 no.
3	Fibrizor Power to be added at other side 750 HP & 600 HP will be kept as spare	1 no.
4	Zero mill 30"x60" having UFR with 350Hp drive	1 Set
5	IRC between zero and 1st Mill	1 no.
6	24"x48" TRPF with 75 HP individual Drive	4 nos.
7	BE Existing RBC Drive to be shifted at BE	1 no.
8	RBC – Existing cane carrier drive to be shifted at RBC	1 no.
9	New Raw juice pumps for 1&2 Mill 90 Cu M/hr	2 no.
10	Raw juice Pumps 1&2 Mill to be shifted to 3&4 Mill	1 no
11	Screen juice Pump to be added of 100 Cu M/Hr	1 no.
12	Flow meters to be change	2 no.
13	Erection	1 no.
14	MCC Electrical Panels	1 no.

S. No.	Description (Boiling House)	Qty
1	Juice Heater r 170 HAS CJ & SJ	2 no.
2	Existing CJ & SJ to be shifted at RJ	2 no.
3	Juice Limer height to be increase for 110 HL	1 no.
4	Juice clarifier 1 compartment to be added	1 no.
5	Evaporator body 1200 SqM with 3 M tube height	1 no.
6	Clear & Lime juice Pump to be added of 100 CuM/Hr	2 nos.
7	Syrup Pump 45 CuM/Hr	1 no.
8	Batch Pan 50 MT	1 no.
9	Air cooled cry 60 MT	1 no.
10	Dry Seed Cry 20 MT	1 no
11	Belt Conveyor Grader to Cry 300 Wx15 Meter Lng	1 no.
12	Injection pumps 500 cum/hr	1 no.
13	Spray pumps 500 cum/hr	1 no.
14	Centrifugal Machine 1100	1 no.
15	Pug Mill & screw conveyor	2 no.
16	Erection	1 no.
17	MCC electrical Panels	1 no.
18	6x6 screw pump for b heavy	2 no.

a. Placement of Order:

Our Company has not yet placed the Order for the above-stated design, manufacturing, supply, erection and commissioning of milling house & boiling house equipments.

For risk associated with respect to placement of order kindly refer to Risk Factor No 12 mentioned in Section titled 'Risk Factors' beginning of page no. 32 of this Draft Red Herring Prospectus

b. Proposed location of plant, machineries, equipment:

Gat No-912, Khamaswadi, Kallam, Osmanabad, Maharashtra, 413507.

The above stated location is already leased for our business operations. *For details regarding lease terms, kindly refer heading titled "Properties" under the chapter titled "Our Business", beginning on page no. 177 of this Draft Red Herring Prospectus*

c. Connection with the proposed vendor:

Our company, Directors, Promoters, KMPs, SMPs and their relatives, Merchant Banker and its affiliates are not related to the proposed vendor directly or otherwise.

d. Old or New Machinery:

The quotations for the plant, machineries and equipment provided hereinabove, related to purchase/fabrication/erection/installation of new plant, machineries and equipment.

e. Timeline for setting up of the Project and start of commercial production:

Our Company estimates to complete the setting up of the machinery/plant/equipment for the proposed capacity expansion, on or before the end of December 2027.

Our Company has already started commercial production of Jaggery Powder, Khandsari Sugar and its by-products with its exiting factory set up. Our Company estimates that the increased capacity would be able to produce increased output upon completion of the expansion as stated in the above paragraph.

For risk associated with respect to timeline for setting-up the project kindly refer to Risk Factor No 15 mentioned in Section titled 'Risk Factors' beginning of page 35 of this Draft Red Herring Prospectus

f. *Government* Approvals:

It is herewith stated that as our Company intends to only expand its existing manufacturing facility thus our Company already possess all the requisite licenses for the operation of the manufacturing facility.

For details regarding Government Approvals and Licenses held by our Company, kindly refer to the chapter titled "Government Approvals" beginning on page no 293 of the Draft Red Herring Prospectus.

However certain of our licenses would require to be amended and/or revised for the proposed expansion. The list of such licenses and the timeline for submission of the requisite application are provided hereinunder:

S. No.	Name of License	Status of revision in the License and/or timeline for submission of revision application
1.	Consent to Establish under Section 25 of the Water (Prevention & Control of Pollution) Act, 1974 & under Section 21 of the Air (Prevention & Control of Pollution) Act, 1981 and Authorization under Rule 6 of the Hazardous & Other Wastes (Management & Transboundary Movement) Rules 2016	Already Applied-Pending approval
2.	Consent to Operate under Section 26 of the Water (Prevention & Control of Pollution) Act, 1974 & under Section 21 of the Air (Prevention & Control of Pollution) Act, 1981 and Authorization under Rule 6 and Rule 18(7) of the Hazardous & Other Wastes (Management & Transboundary Movement) Rules 2016	Application will be made post completion of expansion.
3.	Factory License	
4.	Certificate of Fire Safety Under Maharashtra Fire Prevention and Life Safety Measures Act, 2006	

For risk relating to Government Approvals, kindly refer to the Risk Factor no. 16 under Section titled "Risk Factor" on page no 35 of the Draft Red Herring Prospectus.

2. PRE-PAYMENT/RE-PAYMENT, IN PART OR FULL, OF CERTAIN OUTSTANDING BORROWINGS OF OUR COMPANY

Our Company has entered into various financing arrangements for setting up its Manufacturing Facility and facilitating its business operations by way of Term Loans and Working Capital Loans. As at June 30, 2026, the outstanding secured borrowings of our Company from Financial Institutions/Banks on a consolidated basis was ₹ 5,464.91 lakhs.

We intend to utilize an amount of ₹3,750 lakh (i.e. amounting to 68.62 % of the total secured loan portfolio as June 30, 2026) from the Net Proceeds for financing the repayment/pre-payment, in part or full of certain borrowings availed by our Company, the details of which are listed out in the table below.

Given the nature of the borrowings and the terms of repayment or prepayment, the aggregate outstanding amounts under the secured borrowings from the Financial Institutions/Banks may vary from time to time and our Company may, in accordance with the relevant repayment schedule, repay or refinance some of its existing secured borrowings prior to the date allotment. Further, the amounts outstanding under the secured borrowings as well as the sanctioned limits are dependent on several factors and may vary with our Company's business cycle with multiple intermediate repayments, drawdowns and enhancement of sanctioned limits. However, the aggregate amount to be utilized from the Net Proceeds towards prepayment or repayment of the secured borrowings (including refinanced or additional facilities availed, if any) from Financial Institutions/Banks, in part or full, would not exceed ₹3,750 lakh.

The repayment/ pre-payment of such loans will help reduce our outstanding indebtedness, debt servicing costs, improve our financial position, performance and debt-to-equity ratio and enable utilization of our internal accruals for further investment in the growth and expansion of our business. Additionally, a reduction of our outstanding indebtedness will improve our ability to raise further resources in the future to fund our potential business development opportunities.

In accordance with the terms of the relevant secured borrowing arrangements, prepayment of certain secured borrowings may attract prepayment penalties as stipulated in the relevant borrowing documents. Such prepayment charges, as applicable, will also be funded out of the Net Proceeds, in accordance with the requirements of our Company. If the Net Proceeds are insufficient for making payments for such pre-payment penalties, the excess amount shall be funded through our internal accruals.

The details of the outstanding secured borrowings, availed by our Company from Financial Institutions/Banks, proposed to repaid or pre-paid, in full or part, from the Net Proceeds are as set out in the table below.

(The rest of the page is intentionally left blank)

Sr. No.	Name of Lendor	Nature of Borrowing	Secured / unsecured	Security	Details of facility	Disbursement date	Sanctioned amount (In Lakhs)	Outstanding as on 30 June 2026	Interest rate per annum	Repayment tenor	Prepayment penalty	Purpose for which disbursed loan amount was used
1	Dombivli Nagari Sahakari Bank Ltd	Cash Credit (Pledge of Jaggery powder stock)	Secured	Note 1	Original Sanction Letter date November 08, 2023 & Renewed/Revised Sanction Letter date December 24, 2025	November 21, 2023	4,000.00	853.87	9.40% p.a.	On demand	NA	For making payments to Cane growers and to meeting the Working Capital
2	HDFC Bank Limited	Term Loan	Secured	Note 2	Original Sanction Letter date March 14, 2025, Renewed/Revised Sanction Letter date September 29, 2025 & Sanction Letter date March 05, 2026	April 02, 2025	3,672.00	3,062.42	Floating rate as per Sanction 8.75% p.a. Interest rate as on June 30, 2026 8.50% p.a.	70 months	Upto 4% of loan Principal outstanding for Term loan (plus taxes).	Setting up the Manufacturing Facility of Jaggery Plant. *Note: HDFC has taken over the previous loan from SBI Bank*
3	HDFC Bank Limited	Cash Credit				May 07, 2025	400.00	400.00	Floating rate as per Sanction 8.75% p.a.	12 months	Upto 4% of sanctioned amount for Working Capital Facility (plus taxes).	Working Capital
4	HDFC Bank Limited	Seasonal Cash Credit				May 07, 2025	500.00	382.89	Floating rate as per Sanction 8.75% p.a.	7 Months	Upto 4% of sanctioned amount for Working Capital Facility (plus taxes).	Working Capital
5	HDFC Bank Limited	Term Loan				May 27, 2025	850.00	765.73	Floating rate as per Sanction 9.00% p.a. Interest rate as on June 30, 2026 9.00% p.a.	84 months	Upto 4% of loan Principal outstanding for Term loan (plus taxes).	Setting up the expansion of the Manufacturing Facility – Khandsari Plant.

Notes to outstanding secured borrowings:

1. NATURE/ DESCRIPTION OF SECURITY OF DNS BANK:

a. Primary Security:

Exclusive First Charge on stock of Jaggery Powder and/or Khandsari Sugar kept at "Godown No. 01, Ground Floor, M. Pawar Wearhouse, Plot Number 01 & Block Number A-29, Main Road, Diksal MIDC, Diksal, Kalanb, Dharashiv- 413 507" vide Stock pledger.

b. Personal Guarantee:

i. Mr. Dattatray Kashinath Kulkarni
ii. Mrs. Dipali Dattatraya Kulkarni
iii. Mr. Dinesh Mukund Kulkarni

2. NATURE/ DESCRIPTION OF SECURITY OF HDFC BANK:

a. Primary Security:

Debtors, Fixed Deposit, Plant and Machinery for takeover and proposed Tl, Pledge stock, Stock.

b. Collateral Security:

Equitable Mortgage of following properties:

i. Gut No. 912 Part Near Jagdamba Temple Village Khamaswadi Industrial Plot No. 01 And 02 M/s. Shree Sidhivinayak Greentech Industries Pvt. Ltd Moha Dhoki Road Tq. Kalamb Dist. Osmanabad Osmanabad Maharashtra 413507, Industrial Property used for commercial activity. (Name of the owner: Mr. Dattatray Kashinath Kulkarni)

ii. Sy.no18/1 19and 20/3 Near Chandrama Residency Artemis Road Off Sun City Road Flat No.701 7th Floor Building Aura Artemis Co. operative Housing Society Ltd. Situated At Vadgaon Bk Anand Nagar Tq. Haveli Dist. Pune Pune Maharashtra 411051, Residential F Flat, Apartment. (Name of the owner: Mr. Mukund Kashinathrao Kulkarni)

iii. Gut No. 911 Part Village Khamaswadi At Moha Dhoki Road Near Jagdamba Temple Beside M/s. Shree Sidhivinayak Greentech Industries Pvt. Ltd Tq. Kalamb Dist. Osmanabad Osmanabad Maharashtra 413507, Industrial Property used for commercial activity. (Name of the owner: Mr. Dattatray Kashinath Kulkarni)

iv. Sy. No.113/A/1 Part Near Shree Sidhivinayak Agritech Industries Ltd Plot No.1 At. Village Limit Mouje Katgaon Tq.tuljapur Dist. Osmanabad Osmanabad Maharashtra 413623, Commercial-open Land (Name of the owner: Mr. Dattatray Kashinath Kulkarni)

v. Sy No 203/4 Osmanabad Commercial Open Land Front Of Tapre Building And Hotel Kesari Wada Bypass Road Waruda Road National Highway Touch Osmanabad Maharashtra 413501, Vacant Land. (Name of the owner: Mr. Dattatray Kashinath Kulkarni)

c. Guarantors:

i. Mr. Dinesh Mukund Kulkarni
ii. Mr. Mukund Kashinathrao Kulkarni
iii. Mr. Ganesh Ashok Kamte
iv. Mr. Prathmesh Jagdish Awate
v. Mr. Dattatray Kashinath Kulkarni
vi. Mrs. Dipali Dattatraya Kulkarni

We herewith confirm that there has been no instance of delays, defaults and rescheduling/ restructuring/ ever greening of the outstanding secured borrowings for which a part of net proceeds will be utilized for repayment/ prepayment.

In accordance with paragraph 9(A)(2)(b) of Part A of Schedule VI of the SEBI ICDR Regulations, the Statutory Auditors of our Company M/s. A N Gawade & Co. LLP**,** Chartered Accountants, have issued a certificate having dated July10, 2026 certifying that the secured borrowings from the Financial Institutions/Banks have been utilized by our Company, towards the purposes for which such borrowings were availed.

We herewith confirm that the use of the proceeds from this issue shall not be used for repayment/prepayment of outstanding loans taken by our company from our Directors or their relatives, our Promoters, Member of promoter group and Group Companies. Further, the proposed loan repayment does not directly or indirectly benefit our Directors or their relatives, our Promoters, Member of promoter group and Group Companies.

We may consider various factors for identifying the loans that will be repaid or pre-paid out of the Net Proceeds, including: (i) costs, expenses and charges relating to the facility including interest rates involved; (ii) presence of onerous terms and conditions under the facility; (iii) ease of operation with the lender; (iv) terms and conditions of consents and waivers; (v) provisions of any law, rules, regulations governing such borrowings; and/or (vi) other commercial considerations including, among others, the amount of the loan outstanding and the remaining tenor of the loan.

3. GENERAL CORPORATE PURPOSES:

Our Company proposes to deploy the balance Net Proceeds aggregating to ₹ [●] Lakhs towards General Corporate Purposes, subject to such utilization not exceeding 15% of the Gross Proceeds or ₹ 1,000.00 Lakhs, whichever is lower. Our Company intends to deploy the balance Net Proceeds, if any, for general corporate purposes, subject to the above-mentioned limit, as may be approved by our management, including but not restricted to, the following:

a) To meet the overheads, if any, relating to the capital expenditure as provided in the point no 1 herein above.
b) meeting any expense of our Company, including salaries and wages, administration, insurance, repairs and maintenance;
c) payment of taxes and duties;
d) meeting expenses incurred in the ordinary course of business and towards any exigencies;
e) Strategic Initiatives;
f) Brand Building and strengthening of marketing activities;
g) Ongoing general corporate exigencies or any other purposes as approved by the Board subject to compliance with the necessary regulatory provisions;
h) any other purpose, as considered expedient.

The quantum of utilization of funds towards each of the above purposes will be determined by the Board of Directors of our Company based on the permissible amount actually available under the head "General Corporate Purposes" and the business requirements of our Company, from time to time. We in accordance with the policies of the Board, will have flexibility in utilizing the balance Net Proceeds for General Corporate Purposes, as mentioned above.

4. ISSUE RELATED EXPENSES

The total expenses of the Issue are estimated to be approximately ₹ [●] Lakhs. The expenses of this Issue include, among others, Issue Management Expenses viz., Lead Manager Fees, Underwriter Fees, Legal Advisors, Market Maker, Registrar, Printing and Distribution Expense, Advertisement Expenses, Legal Fees, Listing Fees, etc.

(The rest of the page is intentionally left blank)

The estimated Issue expenses are as under:

Activity	₹ In Lakhs#	% of the total Issue expenses	% of the total Issue size
Lead manager(s) fees including underwriting commission	[●]	[●]	[●]
Brokerage, selling commission and upload fees	[●]	[●]	[●]
Registrars to the issue	[●]	[●]	[●]
Legal Advisors	[●]	[●]	[●]
Advertising and marketing expenses	[●]	[●]	[●]
Regulators including stock exchanges	[●]	[●]	[●]
Printing and distribution of issue stationary	[●]	[●]	[●]
Others, if any (to be specified).	[●]	[●]	[●]
Total estimated Issue expenses	[●]	[●]	[●]

Amounts will be finalized and incorporated in the Prospectus on determination of Issue Price. Issue expenses include GST, where applicable. Issue expenses are estimates and are subject to change.

The above mentioned amounts are tentative in nature and subject to change. Any increase and/or decrease of the above-mentioned expenses on actuals will either decrease or increase the Net Proceeds. The decrease or increase in the net proceeds shall be adjusted from / with the "General Corporate Expenses", subject to such utilization not exceeding 15% of the Gross Proceeds or ₹ 1000 Lakhs, whichever is lower in accordance with the SEBI ICDR Regulations.

For payment of Brokerage/Commission:

1. ASBA applications procured directly from the applicant and Bided (excluding applications made using the UPI Mechanism, and in case the Issue is made as per Phase I of UPI Circular) - Rs 10/- per application on wherein shares are allotted.

2. Syndicate ASBA application procured directly and bided by the Syndicate members (for the forms directly procured by them) – Rs 10/- per application on wherein shares are allotted.

3. Processing fees / uploading fees on Syndicate ASBA application for SCSBs Bank - Rs 10/- per application on wherein shares are allotted.

4. The processing fees for applications made by Retail Individual Bidders using the UPI Mechanism would be as follows:

Sponsor Bank – [●]	[●] Fee up to [●] UPI Bids. * ₹ [●] /- + GST for Bids beyond [●] UPI Bids. *

*For each valid application by Sponsor Bank
No uploading/ processing fees shall be payable by our Company to the Members of the Syndicate/ RTAs/ CDPs for applications made by various applicants using the UPI Mechanism.

5. No additional uploading/processing charges shall be payable to the SCSBs on the applications directly procured by them.

6. The commissions and processing fees shall be payable within 30 Working days post the date of receipt of final invoices of the respective intermediaries.

7. Amount Allotted is the product of the number of Equity Shares Allotted and the Issue price.

DETAILS OF FUNDS ALREADY DEPLOYED TILL DATE AND SOURCES OF FUNDS DEPLOYED

We confirm that no funds have been deployed for the proposed objects of the Issue till the date of this Draft Red Herring Prospectus.

BRIDGE FINANCING

We have currently not raised any bridge loans against the proceeds of the Issue. However, depending on our requirement, we might consider raising bridge financing facilities, pending receipt of the proceeds of the Issue.

APPRAISAL BY APPRAISING AGENCY

None of the Objects have been appraised by any bank or financial institution or any other independent organization. The funding requirements of our Company and the deployment of the proceeds of the Issue are currently based on management estimates. However, the funding requirements of our Company are dependent on a number of factors which may not be in the control of the management of our Company, including variations in interest rate structures, changes in the current commercial conditions and are subject to changes in light of changes in external circumstances or in our financial condition, business, or strategy.

SHORTFALL OF FUNDS

Any shortfall in meeting the objects will be met by way of internal accruals.

INTERIM USE OF FUNDS

Pending utilisation for the purposes described above, we undertake to temporarily invest the funds from the Net Proceeds only with scheduled commercial banks. In accordance with Section 27 of the Companies Act 2013, our Company confirms that it shall not use the Net Proceeds for buying, trading or otherwise dealing in shares of any other listed company or for any investment in the capital market.

MONITORING OF UTILIZATION OF FUNDS

In accordance with Regulation 262 of the SEBI ICDR Regulations, our Company will appoint a monitoring agency for monitoring the utilization of Gross Proceeds from the Fresh Issue prior to filing of the Red Herring Prospectus with the RoC, as the proposed Issue exceeds ₹5,000.00 Lakhs.

VARIATION IN OBJECTS

In accordance with Section 27 of the Companies Act 2013, our Company shall not vary object of the Issue without our Company being authorized to do so by Company's shareholders in relation to the passing of such special resolution, by following the prescribed procedure as required under the Companies Act. As per the current provisions of the Companies Act, the Promoter or controlling shareholders would be required to provide an exit opportunity to such shareholders who do not agree to the proposal to vary the objects, at such price, and in such manner as prescribed by Securities and Exchange Board of India in this regard.

OTHER CONFIRMATIONS

There are no material existing or anticipated transactions with the Promoter, Directors, Key Managerial Personnel of our Company and Group Entities, in relation to the utilization of the proceeds of the Issue. No part of the issue proceeds will be paid by us as consideration to the Promoter, Directors or Key Managerial Personnel of our Company or Group Entities, except in the normal course of business and in compliance with the applicable laws.

(The rest of the page is intentionally left blank)

BASIS FOR ISSUE PRICE

The issue price and the price band has been determined by the issuer in consultation with the book running lead manager and justified by the issuer in consultation with the book running lead manager on the basis of assessment of market demand for the Equity Shares through the Book Building Process on the basis of the quantitative and qualitative factors described below. The financial data presented in this Chapter are based on our Company's Restated Financial Statements. The face value of the Equity Shares is ₹ 10 each and the Issue Price is [●] *times the face value of the Equity Shares. Investors should also refer to Section titled "Risk Factors" and Chapter titled "Our Business", "Restated Financial Statements" and "Management's Discussion and Analysis of Financial Condition and Results of Operations" beginning on page no. 22, 147, 227 and 265 respectively of this Draft Red Herring Prospectus, to have an informed view before making an investment decision.*

QUALITATIVE FACTORS

- Integrated Sugarcane Processing Operations
- Backward Integration and Strong Farmer Ecosystem
- Proximity to Sugarcane Catchment Area and Efficient Procurement
- Seasonal Operational Expertise and High Capacity Utilisation
- Zero-Waste and Circular Manufacturing Model
- Energy Efficiency through Captive Power Generation
- Diversified Product Portfolio Across B2B and B2C Segments
- Established B2B Distribution Network with By-Product Monetisation
- Emerging B2C Brand Presence and Retail Expansion
- Sustainable and Environment-Friendly Operations
- Quality Control and Process Standardisation
- Government Incentive

[For further details of Qualitative factors please refer to the head titled 'Our Competitive Strengths' in the chapter titled 'Our Business' on page no. 167 of this Draft Red Herring Prospectus.]

QUANTITATIVE FACTORS

The information presented in this section for the financial year ended March 31, 2026, 2025 and 2024 is derived from our Restated Financial Statements. *For more details on financial information, investors may please refer the chapter titled "Restated Financial Statements" beginning on Page No. 227 of this Draft Red Herring Prospectus.* Quantitative factors which form the basis for computing the price are as follows:

1. **Basic and Diluted earning per equity share ("EPS") as adjusted for change in equity (face value of each Equity Share is ₹10)**:

Fiscal/Period Ended	Basic and Dilluted EPS (in ₹)	Weight
March 31, 2026	9.46	3
March 31, 2025	4.49	2
March 31, 2024	2.52	1
Weighted Average	**6.65**	

NOTES:

1. *Basic EPS per share is calculated as Net Profit/ (loss) for the year divided by the adjusted weighted average number of equity shares outstanding during the year.*
2. *Diluted EPS per share is calculated as Net Profit/ (loss) for the year divided by the adjusted weighted average number of equity shares outstanding during the year.*
3. *Weighted average = Aggregate of year-wise weighted EPS divided by the aggregate of weights i.e. (EPS x Weight) for each year/total of weights.*
4. *The face value of the Equity Shares is ₹10 each.*
5. *The figures disclosed above are derived from the Restated Financial Statements of our Company.*

[For the above details relating to Basic and Diluted earning per equity share ("EPS") as adjusted for change in equity, we have relied upon the certificate dated July 10, 2026, issued by the Statutory Auditors of our Company i.e., M/s. A N Gawade & Co. LLP, Chartered Accountants]

2. **Price Earning (P/E) Ratio in relation to the Price Band of ₹ [●] to ₹ [●] per Equity Share of Face Value of ₹10/- each fully paid up:**

Sr. No	Particulars	P/E at the lower end of the price band (Floor Price) (no. of times)	P/E at the higher end of the price band (Cap Price) (no. of times)
1	Based on basic EPS for the year ended March 31, 2026	[●]*	[●]*
2	Based on diluted EPS for the year ended March 31, 2026	[●]*	[●]*

**The details shall be updated on finalization of the Price Band.*

3. **Industry P/E Ratio:**

Particulars	P/E Ratio
Highest	18.80
Lowest	13.90
Average	16.35

The industry high and low has been considered from the industry peer set provided later in this Chapter.

The industry composite has been calculated as the arithmetic average P/E Ratio of the industry peer set disclosed in this Chapter. For further details, see heading titled "Comparison of Accounting Ratios with Industry peers".

4. **Return on Net worth (RoNW):**

Sr. No.	Period	RONW (%)	Weights
1	FY 2025-26	46.24	3
2	FY 2024-25	29.75	2
3	FY 2023-24	23.74	1
	Weighted Average	**36.99**	

Notes:

1. *Return on Net Worth (%) = Restated profit/loss for the year divided by net worth as the end of year.*
2. *"Net worth" means the aggregate value of the equity share capital and retained earnings as per Restated Financial Statements of our Company.*
3. *Weighted average = Aggregate of year-wise weighted RoNW divided by the aggregate of weights i.e. RoNW x Weight for each year/total of weights.*
4. *The figures disclosed above are derived from the Restated Financial Statements of our Company.*

[For the above details relating to Return on Net worth, we have relied upon the certificate dated July 10, 2026, issued by the Statutory Auditors of our Company i.e., M/s. A N Gawade & Co. LLP, Chartered Accountants]

5. **Net Asset Value (NAV) per Equity Share:**

Sr. No.	As at	NAV (₹ per share)
1	As on March 31, 2026	20.47
2	After the completion of the Issue	[●]

Notes:

1. *Adjusted Net Asset Value per equity share represents net worth as at the end of the year divided by adjusted number of Equity Shares outstanding at the end of the year.*
2. *Adjusted number of equity shares is the number of equity shares outstanding at the end of the year multiplied by the time-weighting factor.*

[For the above details relating to Net Asset Value (NAV) per Equity Share, we have relied upon the certificate dated July 10, 2026, issued by the Statutory Auditors of our Company i.e., M/s. A N Gawade & Co. LLP, Chartered Accountants]

6. Comparison of Accounting Ratios with Industry Peers

Name of the company	Face Value (₹ per share)	Basic & Diluted EPS (₹)	P/E Ratio	Return on Net Worth (%)	NAV per share (₹)	Revenue from operations (₹ in Lakhs)
Shree Siddhivinayak Greentech Industries Limited	10	9.46	[●]#	46.24	20.47	7,526.77
Listed Peers						
Dhampure Speciality Sugars Limited	10	6.35	18.8*	13.07	48.61	5,838.98
Dollex Agrotech Limited	10	2.27	13.9*	6.79	31.03	22,515.77

Source: Our Company's financial figures are based on restated audited financial statements for the financial year ended on March 31, 2026, unless provided otherwise.
* P/E ratio for the listed peer is taken from the closing price as on July 10, 2026 at BSE/NSE (Closing price considered) divided by the EPS as on March 31, 2026.
# P/E ratio is as per the restated financials for FY 2025-26.

With respect to Industry peers, all the financial information mentioned above is on a consolidated basis (unless otherwise available only on standalone basis) and sourced from the audited financial statements/Annual Reports of the respective companies for the year ended March 31, 2026, available on public domain unless provided otherwise.

Notes:

1. EPS *is the consolidated Basic Earnings Per Share for the year ended March 31, 2026.*
2. *RoNW has been computed as consolidated Net profit after tax attributable to the owners of the company divided by consolidated Net worth at the end of the year ended March 31, 2026.*
3. *NAV* per equity share has been calculated as consolidated Net worth divided by Number of equity shares outstanding as on March 31, 2026.

7. Key Performance Indicators:

The KPIs disclosed below have been used historically by our Company to understand and analyze the business performance, which as a result, help us in analyzing the growth of our Company. The KPIs disclosed below have been approved by a resolution of our Audit Committee dated June 30, 2026 and the members of the Audit Committee have verified the details of all KPIs pertaining to our Company. Further, the members of the Audit Committee have confirmed that there are no KPIs pertaining to our Company that have been disclosed to any investors at any point of time during the three years period prior to the date of this Draft Red Herring Prospectus.

The KPIs of our Company have been disclosed in the Chapter titled "Our Business" and "Management's Discussion and Analysis of Financial Condition and Results of Operations" beginning on page no 147 and 265 respectively of this Draft Red Herring Prospectus.

We have described and defined the KPI's as applicable. For details in relation to the definitions kindly refer to the head titled "Key Performance Indicators" in the chapter titled "Definition and Abbreviation" beginning on page no. 2 of this Draft Red Herring Prospectus.

Our Company confirms that it shall continue to disclose all the KPIs included in this chapter on a periodic basis, at least once in a year (or any lesser period as determined by the Board of our Company), for a duration of one year after the date of listing of the Equity Shares on the Stock Exchange or for such other duration as may be required under the SEBI (ICDR) Regulations or till such time the proceeds from this issue are fully not utilised. Further, the ongoing KPIs will continue to be certified by a member of an expert body as required under the SEBI (ICDR) Regulations.

The list of our KPIs along with brief explanation of the relevance of the KPI for our business operations are set forth below:

Key Financial Performance	Unit	March 31, 2026	March 31, 2025	March 31, 2024
Revenue from Operations	In lakhs	7,526.77	5,856.63	3,627.64
Year on year revenue growth	In %	28.52%	61.44%	-
EBITDA	In lakhs	2,046.22	1,454.29	861.30
EBITDA Margin	In %	27.19%	24.83%	23.74%
PAT	In lakhs	1,159.22	549.66	308.13
PAT Margin	In %	15.40%	9.39%	8.49%
Profit after tax growth	In %	110.90%	78.39%	-
Cash Profit after tax	In lakhs	1,334.55	708.63	455.92
Operating cash flow	In lakhs	504.19	1,324.17	(1,778.64)
Trade Receivables days	In Days	0	8	0
Inventory days	In Days	117	147	1
Trade Payable days	In Days	150	256	101
Interest Coverage Ratio	In Times	3.70	1.98	1.88
Net worth	In lakhs	2,507.01	1,847.78	1,298.13
Debt	In lakhs	8,995.37	7,275.58	7,645.26
Net fixed asset turnover ratio	In Times	1.24	1.09	0.76
Current Ratio	In Times	0.90	0.88	0.87
Debt-Equity Ratio	In Times	3.59	3.94	5.89
Return on equity	In %	53.24%	34.94%	47.11%
Return on capital employed	In %	19.76%	17.20%	9.22%
Net Asset Value per equity share	In Rs	51.16	377.10	264.92
Net Asset Value per equity share – Adjusted	In Rs	20.47	15.08	10.60

Basis and Explanations for KPI:

Key Financial Performance	Basis	Explanations
Revenue from Operations	Revenue from operation means revenue from operation as stated in the profit and loss.	Revenue from Operations is used by the management to track the revenue profile of the business and in turn helps to assess the overall financial performance of our Company and volume of the business.
Year on year revenue growth	Growth in Revenue from Operations is calculated as percentage change in revenue from operations over previous fiscal.	Revenue Growth represents year-on-year growth of the business operations in terms of revenue generated by our company.
EBITDA	EBITDA is calculated as Profit before tax + Depreciation + Interest Expense – Other Income.	EBITDA provides information regarding the operational efficiency of the business.
EBITDA Margin	EBITDA Margin is calculated as EBITDA divided by Revenue from Operations.	EBITDA Margin (%) is an indicator of the operational profitability and financial performance of the business.
PAT	PAT means profit after taxes for respective year.	Profit after tax provides information regarding the overall profitability of the business.
PAT Margin	PAT Margin is calculated as profit for the year divided by revenue from operations.	PAT Margin (%) is an indicator of the overall profitability and financial performance of the business.

Key Financial Performance	Basis	Explanations
Profit after tax growth	Growth in PAT is calculated as percentage change in profit after tax over previous fiscal.	Profit after tax growth provided information regarding the growth of the operational performance of the respective period.
Cash Profit after tax (Profit after tax +dep)	Cash profit after tax is calculated as profit after tax plus depreciation.	Cash Profit after Tax shows the actual cash-generating ability of the business after accounting for non-cash expenses and reflects the cash profitability of the Company.
Operating cash flow	Operating cash flow is cash flow from the operating line item in cash flow statement.	Operating cash flow shows whether the company is able to generate cash from day-to-day business operations.
Trade Receivables days	Trade receivable days is calculated as average trade receivables divided by revenue from operations multiplied by 365 for fiscal years.	Trade Receivables days is the average number of days required for a company to receive payments from its customers.
Inventory days	Inventory days is calculated as average inventory divided by Revenue from Operations multiplied by 365 for fiscal years.	Inventory days is the average number of days required for a company to convert its inventory into sales.
Trade Payable days	Trade payable days is calculated as average trade payables divided by total purchases made during the year multiplied by 365 for fiscal years.	Trade Payable days is the average number of days required for a company to pay its suppliers.
Interest coverage ratio	Interest coverage ratio is calculated as Profit before tax plus interest expense divided by interest expense.	Interest Coverage Ratio indicates the Company's ability to meet its interest obligations from its profits. A higher ratio suggests stronger debt-servicing capacity and financial stability.
Net worth	Net worth is calculated as share capital plus reserve and surplus.	Net worth is used by the management to ascertain the total value created by the business and provides a snapshot of current financial position of the business.
Debt	Debt is calculated as Long term borrowing plus Short term borrowing.	Debt showcases the borrowings undertaken by our Company.
Net fixed asset turnover ratio	Net fixed asset turnover ratio is calculated by dividing revenue from operations by the average of fixed assets.	Net fixed asset turnover ratio is indicator of the efficiency with which our Company is able to leverage its assets to generate revenue from operations. It is further stated that during FY 2023-2024 and FY 2025-2026, our Company has undertaken set up and expansion of our factory.
Current Ratio	Current Ratio is calculated by dividing Current assets to Current Liabilities.	The current ratio is a liquidity ratio that measures our Company's ability to pay short-term obligations or the liabilities that is due within one year.
Debt-Equity Ratio	Debt to Equity ratio is calculated as Total Debt divided by shareholder equity (Net Worth).	Debt / Equity Ratio is used to measure the financial leverage of our Company.
Return on Equity	Return on Equity is calculated by comparing profit for the year against the amount of average shareholder equity.	Return on equity provides how efficiently our Company generates profits from shareholders' funds.
Return on Capital Employed	Return on Capital Employed is calculated as follows: Profit for the year plus finance cost plus tax expenses (EBIT) divided by (Net Worth plus Total Debt).	Return on capital employed provides how efficiently our Company generates earnings from the capital employed in the business.
Net Asset Value per share (in Rs)	Net Asset Value per share (in ₹) = Restated net worth at the end of the year /	NAV represents the per share book value of our Company.

Key Financial Performance	Basis	Explanations
	Number of Equity Shares at the end of the year.	
Net Asset Value per Share (in Rs) Adjusted	Net Asset Value Per Share (In ₹) Adjusted = Restated Net Worth at the end of the year / Weighted Average Number of Equity Shares (Adjusted for the Bonus Issue and Split shares).	NAV (Adjusted) represents the per share book value of our Company where the weighted number of shares have been adjusted for bonus issues post the period of Restated Financial Statements.

[For the above details relating to KPIs, we have relied upon the certificate dated July 10, 2026, issued by the Statutory Auditors of our Company i.e., M/s. A N Gawade & Co. LLP, Chartered Accountants]

(The rest of the page is intentionally left blank)

KPI of Industry Peer for comparison

Key Financial Performance	Unit	Shree Siddhivinayak Greentech Industries Limited			Dhampure Speciality Sugars Limited			Dollex Agrotech Limited		
		March 31, 2026	March 31, 2025	March 31, 2024	March 31, 2026	March 31, 2025	March 31, 2024	March 31, 2026	March 31, 2025	March 31, 2024
Revenue from Operations	In lakhs	7,526.77	5,856.63	3,627.64	5,838.98	3,979.86	2,923.08	22,515.77	23,743.05	13,549.20
Year on year revenue growth	In %	28.52%	61.44%	-	46.71%	36.15%	120.64%	-5.17%	75.24%	22.67%
EBITDA	In lakhs	2,046.22	1,454.29	861.30	712.13*	373.60	66.48	1,703.84*	1,469.84	1,317.96
EBITDA Margin	In %	27.19%	24.83%	23.74%	12.20%	9.39%	2.27%	7.57%	6.19%	9.73%
PAT	In lakhs	1,159.22	549.66	308.13	554.78	287.79	93.67	841.61	828.11	701.82
PAT Margin	In %	15.40%	9.39%	8.49%	9.50%	7.23%	3.20%	3.74%	3.49%	5.18%
Profit after tax growth	In %	110.90%	78.39%	-	92.77%	207.24%	807.66%	1.63%	17.99%	14.96%
Cash Profit after tax	In lakhs	1,334.55	708.63	455.92	593.42	321.95	126.61	1,140.24	1,079.89	984.59
Operating cash flow	In lakhs	504.19	1,324.17	(1,778.64)	503.19	803.67	248.99	-674.96	-2508.79	-4344.47
Trade Receivables days	In Days	0	8	0	24	33	28	104	21	44
Inventory days	In Days	117	147	1	41	48	55	197	237	355
Trade Payable days	In Days	150	256	101	17**	43	44	593#	222#	395#
Interest Coverage Ratio	In Times	3.70	1.98	1.88	351.62	516.03	584.38	3.87	7.13	4.37
Net worth	In lakhs	2,507.01	1,847.78	1,298.13	4,243.87	3,413.09	2,666.69	12,397.42	6,612.15	5,784.04
Debt	In lakhs	8,995.37	7,275.58	7,645.26	3.92	149.34	343.18	15,738.26	18,122.38	10,085.90
Net fixed asset turnover ratio	In Times	1.24	1.09	0.76	2.50	2.55	3.21	8.25	7.88	4.15
Current Ratio	In Times	0.90	0.88	0.87	3.07	4.26	3.55	1.69	2.33	1.61
Debt-Equity Ratio	In Times	3.59	3.94	5.89	0.00	0.04	0.13	1.27	2.74	1.74
Return on equity	In %	53.24%	34.94%	47.11%	14.49%	9.47%	3.76%	8.85%	13.36%	13.02%
Return on capital employed	In %	19.76%	17.20%	9.22%	17.38%	10.57%	2.52%	5.09%	4.94%	6.63%
Net Asset Value per equity share	In Rs	51.16	377.10	264.92	48.61	40.97	33.62	31.03	26.48	23.17
Net Asset Value per equity share-Adjusted	In Rs	20.47	15.08	10.60	48.61	39.09	30.54	31.03	26.48	23.17

Above figures are consolidated whenever applicable.

Assumptions:

*EBITDA has been calculated based on "Finance Cost" as appearing in the Statement of Profit and Loss Account because the schedule to "Finance Cost" to identify "Interest Expenses" is not available in the public domain as on the date of this Draft Red Herring Prospectus.

** Trade Payable Days has been calculated based on "Cost of material consumed" as appearing in the Statement of Profit and Loss Account because the schedule to "Cost of material consumed" to identify "Purchases of Raw Materials" is not available in the public domain as on the date of this Draft Red Herring Prospectus.

Trade Payable Days has been calculated based on "Cost of material consumed" as appearing in the Statement of Profit and Loss Account because the schedule to "Cost of material consumed" does not provide the bifurcation of "opening stock", "Purchases of Raw Materials" and "Closing Stock".

8. The issue price has been determined by the issuer in consultation with the Book Running Lead Manager and justified by the issuer in consultation with the Book Running Lead Manager on the basis of assessment of above parameters through the Book Building Process. The investors may also want to peruse the risk factors and financials of our Company in the Section titled "Risk Factors" and "Financial Information" and chapter titled "Our Business" beginning on page number 22, 227 and 147 respectively of this Draft Red Herring Prospectus, to have a more informed view about the investment.

9. **Weighted *average cost of acquisition of all shares transacted in last 3 years, 18 months and 1 years, from the date of this Draft Red Herring Prospectus:***

Period	Weighted Average cost of acquisition (in ₹) #*	Issue price is 'X' times the weighted average cost of acquisition
Last 1 year	345.34	●
Lat 18 months	345.34	●
Last 3 year	10.00	●

#Excluding *gift*

* Adjusted *for sub-division of face value of ₹100 per equity share to ₹ 10 per equity share pursuant to EGM dated January 23, 2026.*

*[*For *the above details relating to Weighted average cost of acquisition of all shares transacted in last 1 year, 18 months and 3 years, from the date of this Draft Red Herring Prospectus, we have relied upon the certificate dated July 10, 2026, issued by the Statutory Auditors of our Company i.e., M/s. A N Gawade & Co. LLP, Chartered Accountants]*

10. Weighted average cost of acquisition of shares transacted by the Promoter & Promoter Group

a. The price per share of the Company (as adjusted for corporate actions, including split, bonus issuances) based on primary issuances of Equity Shares or convertible securities (excluding Equity Shares issued under the ESOP Scheme and issuance of Equity Shares pursuant to a bonus issue) during the 18 months preceding the date of the Draft Red Herring Prospectus, where such issuance is equal to or more than 5% of the fully diluted paid-up share capital of the Company in a single transaction or multiple transactions combined together over a span of rolling 30 days ("Primary Issuances") based on the primary/ new issue of shares (equity/ convertible securities)

Our Company has not issued any Equity Shares or convertible securities ("Security(ies)"), excluding shares issued under ESOP/ESOS and issuance of bonus shares, as applicable, during the 18 months preceding the date of this certificate, where such issuance is equal to or more that 5% of the fully diluted paid-up share capital of our Company (calculated based on the pre-Issue capital before such transaction/s and excluding employee stock options granted but not vested), in a single transaction or multiple transactions combined together over a span of rolling 30 days:

b. The price per share of the Company (as adjusted for corporate actions, including bonus issuances) based on secondary sale/ acquisitions of shares (equity/ convertible securities) (excluding gifts) involving any of the Promoters, members of the Promoter Group, Selling Shareholders or Shareholder(s) with rights to nominate director(s) during the 18 months preceding the date of filing of the DRHP/ /Prospectus, where the acquisition or sale is equal to or more than 5% of the fully diluted paid-up share capital of the Company (calculated based on the pre-issue capital before such transaction/s and excluding employee stock options granted but not vested), in a single transaction or multiple transactions combined together over a span of rolling 30 days ("Secondary Transactions")

There have been no secondary sale/ acquisitions of Equity Shares or any convertible securities ("Security(ies)"), where the Promoter, members of the promoter group, selling shareholders, or shareholder(s) having the right to nominate director(s) in the board of directors of our Company are a party to the transaction (excluding gifts), during the 18 months preceding the date of this certificate, where either acquisition or sale is equal to or more than 5% of the fully diluted paid up share capital of our Company (calculated based on the pre-Issue capital before such transaction/s and excluding employee stock options granted but not vested), in a single transaction or multiple transactions combined together over a span of rolling 30 days.

c. Since there are no such transaction to report to under (a) and (b) above, therefore information based on last 5 primary or secondary transactions (secondary transactions where Promoter / promoter group entities or selling shareholders or shareholder(s) having the right to nominate director(s) in the Board of the Issuer Company, are a party to the transaction), not older than 3 years prior to the date of this Draft Red Herring Prospectus irrespective of the size of transactions is as below:

Date of allotment / transfer	No. of Equity Shares**	Face value per equity share (₹)**	Issue / Transfer price per equity share (₹)**	Nature of allotment	Nature of consid eration	Total Consideration (in Rs)
Primary issuances						
March 23, 2024	38,00,000	10	10.00	Private Placement to Dipali Dattatraya Kulkarni	Cash	3,80,00,000
Weighted average cost of acquisition (WACA) (primary issuances) (₹ per Equity Share)						**10.00**
Secondary transactions						
January 29, 2026	10	10	345.34	Purchase by Mangesh Prabhakar Kulkarni	Cash	3453.40
January 29, 2026	10	10	345.34	Purchase by Krushna Dattatrya Kulkarni	Cash	3453.40
Weighted average cost of acquisition (WACA) # (secondary transactions) (₹ per Equity Share)						**345.34**

**Adjusted for sub-division of face value of ₹100 per equity share to ₹ 10 per equity share pursuant to EGM held on January 23, 2026..*

d. Weighted average cost of acquisition:

Types of transactions	Weighted average cost of acquisition (₹ per Equity Share)	IPO Floor Price in ₹ [●] which is [●] times the WACA	IPO Cap Price in ₹ [●]which is [●] times the WACA
(a) Based on primary issuances	NA	NA	NA
(b) Based on secondary transactions	NA	NA	NA
(c) Based on last five transactions			
-Based on primary transactions	10.00	[●]	[●]
-Based on secondary transactions	345.34	[●]	[●]

The Issue Price will be [●] times of the face value of the Equity Shares. [To be included on finalization of Issue Price]

[For the above details relating to the weighted average cost of acquisition, we have relied upon the certificate dated July 10, 2026, issued by the Statutory Auditors of our Company i.e., M/s. A N Gawade & Co. LLP, Chartered Accountants]

The Issue Price of ₹ [●] has been determined by our Company, in consultation with the Book Running Lead Manager, on the basis of the market demand from investors for the Equity Shares through the Book Building Process. Our Company, in consultation with the BRLM, is justified of the Issue Price in view of the above qualitative and quantitative parameters. Investors should read the abovementioned information along with the Sections/Chapter entitled "Risk Factors", "Our Business", "Management's Discussion and Analysis of Financial Condition" and "Financial Information" beginning on page no. 22, 147, 265 and 227 respectively of this DRHP, to have a more informed view.

The trading price of the Equity Shares could decline due to the factors mentioned in the Section titled "Risk Factors" beginning on page no. 22 or any other factors that may arise in the future and investors may lose all or part of their investments.

e. Detailed explanation for Issue price being [●] and [●] times of WACA of Primary issuance price / Secondary transaction/ last 5 (primary or secondary) transactions price, along with comparison of Issuer Company's KPIs and financials ratios for the last three full financial years and stub period (if any) included in the Issue document:

[●]

f. Detailed explanation for Issue price being [●] and [●] times of WACA of Primary issuance price / Secondary transaction/ last 5 (primary or secondary) transactions price in view of the external factors which may have influenced the pricing of the issue, if any:

[●]

(The rest of the page is intentionally left blank)

STATEMENT ON SPECIAL TAX BENEFITS

To,
The Board of Directors,
Shree Siddhivinayak Greentech Industries Limited
(formerly known as Shree Siddhivinayak Greentech Industries Private Limited)
Block Number 1 and 4, Floor No-1 and 2,
Survey No 120, Plot No 4 & C.T.S. Number-5343, Sambhaji Nagar Behind DIC, Osmanabad,
Maharashtra, India, 413501.

Re: Proposed initial public offering of equity shares of face value of ₹ 10 each ("Equity Shares") by Shree Siddhivinayak Greentech Industries Limited (formerly known as Shree Siddhivinayak Greentech Industries Private Limited) (the "Company") and such offering (the "Issue")

We hereby confirm that the enclosed Annexure 1 provides the special tax benefits available to the Shree Siddhivinayak Greentech Industries Limited (formerly known as Shree Siddhivinayak Greentech Industries Private Limited) ("the Company") and its shareholders under the applicable tax laws in India.

1. We are informed that this statement is only intended to provide general information to the investors and is neither designed nor intended to be a substitute for professional tax advice. In view of the individual nature of the tax consequences and the changing tax laws, each investor is advised to consult their own tax consultant with respect to the specific tax implications arising out of their participation in the proposed IPO.

2. We do not express any opinion or provide any assurance as to whether:

   i. the Company and its shareholders will continue to obtain these benefits in future;

   ii. the conditions prescribed for availing the benefits have been / would be met with; and

   iii. the revenue authorities/courts will concur with the views expressed herein.

3. The views expressed in the enclosed Annexure 1 are not exhaustive and the preparation of the contents stated in Annexure 1 is the responsibility of the management of the Company.

4. This statement can be included in the Draft Red Herring Prospectus proposed to be filed by the Company or any other Issue Documents prepared in relation to the IPO (collectively, the "Issue Documents") and is not to be used, referred to or distributed for any other purpose.

For A N Gawade & Co. LLP
Chartered Accountants
ICAI Firm Registration Number: 122158W/W100907

Sd/-
CA Shekhar R. Maske
Designated Partner
Membership No.: 157321
Place: Pune
Date: July 10, 2026
UDIN: 26157321LSPTJS9393

Annexure-1

ANNEXURE TO THE STATEMENT OF SPECIAL TAX BENEFITS AVAILABLE TO THE COMPANY AND ITS SHAREHOLDERS

The information provided below sets out the possible special tax benefits available to the Company and the Equity Shareholder under the Income Tax Act 2025 (read with the rules, circulars and notifications issued in connection thereto), as amended by the Finance Act, 2026 presently in force in India. It is not exhaustive or comprehensive and is not intended to be a substitute for professional advice. Investors are advised to consult their own tax consultant with respect to the tax implications of an investment in the Equity Shares particularly in view of the fact that certain recently enacted legislation may not have a direct legal precedent or may have a different interpretation on the benefits, which an investor can avail.

A. SPECIAL TAX BENEFITS TO THE COMPANY UNDER THE INCOME TAX ACT, 2025 (THE "ACT")

There are no possible special tax benefits available to the company under Income Tax Act, 2025 read with the relevant Income Tax Rules, 2026, the Customs Tariff Act, 1975, the Central Goods and Services Tax Act, 2017, the Integrated Goods and Services Tax Act, 2017, the Union Territory Goods and Services Tax Act, 2017, respective State Goods and Services Tax Act, 2017 and Goods and Services Tax (Compensation to States) Act, 2017 read with the relevant Central Goods and Services Tax Rules, 2017, Integrated Goods and Services Tax Rules, 2017, Union Territory Goods and Services Tax Rules, State Goods and Services Tax Rules, 2017 and notifications issued under these Acts and Rules and the foreign trade policy.

B. SPECIAL TAX BENEFITS TO THE SHAREHOLDERS UNDER THE INCOME TAX ACT, 2025 (THE "ACT")

There are no special tax benefits available to the shareholders of the Company.

Notes:

1. *We have not considered the general tax benefits available to the Company, or shareholders of the Company.*

2. *The above is as per the Tax Laws as on date.*

3. *The above Statement of possible special tax benefits sets out the provisions of Tax Laws in a summary manner only and is not a complete analysis or listing of all the existing and potential tax consequences of the purchase, ownership and disposal of Equity Shares.*

4. *This Statement does not discuss any tax consequences in any country outside India of an investment in the Equity Shares. The subscribers of the Equity Shares in the country other than India are urged to consult their own professional advisers regarding possible income tax consequences that apply to them.*

(The rest of the page is intentionally left blank)

SECTION V: ABOUT THE COMPANY AND INDUSTRY

INDUSTRY OVERVIEW

Unless stated otherwise, industry and market data used in this Section has been derived from a report titled "Processed Food Industry w.r.t Jaggery, Khandsari & Instant Premix" dated July 10, 2026 (the "**Infomerics Analytics & Research Report**") which have been commissioned and paid for by the Book Running Lead Manger to this Issue and prepared by Infomerics Analytics & Research exclusively for the purpose of understanding the industry our Company operates in, in connection with the Issue. The Industry Report is available on the website of our Company at www.shreesiddhivinayakgreentech.com , until the Issue Closing Date. This section discloses the complete report titled "Processed Food Industry w.r.t Jaggery, Khandsari & Instant Premix" dated July 10, 2026 (the "**Infomerics Analytics & Research Report**").

[For further details and risks in relation to commissioned reports, see section titled "Risk factors" beginning on page 22 of this Draft Red Herring Prospectus]

1. Global Economic Outlook

As per the IMF's World Economic Outlook (WEO) published in April 2026, global growth is projected to remain resilient at 3.1 percent in 2026 and at 3.2 percent in 2027. After withstanding higher trade barriers and elevated uncertainty last year, global activity now faces a major test from the outbreak of war in the Middle East. Assuming that the conflict remains limited in duration and scope, the outlook reflects the impact of heightened geopolitical tensions, trade disruptions and cautious investment sentiment, which are expected to weigh on global economic momentum.

Global headline inflation is projected to rise modestly in 2026 before resuming its decline in 2027. Slowdown in growth and increase in inflation are expected to be particularly pronounced in emerging market and developing economies. This is driven by elevated geopolitical tensions, commodity price volatility, external financing pressures and spillover effects from trade and policy uncertainty. Downside risks dominate the outlook, as a longer or broader conflict, worsening geopolitical fragmentation, renewed trade tensions, or a reassessment of expectations surrounding artificial-intelligence-driven productivity could significantly weaken growth and destabilize financial markets. Elevated public debt and eroding institutional credibility further heighten vulnerabilities, while faster-than-anticipated productivity gains from AI or sustained easing in trade tensions could provide upside support. Fostering adaptability, maintaining credible policy frameworks and reinforcing international cooperation remain essential to navigating current shocks and future disruptions.

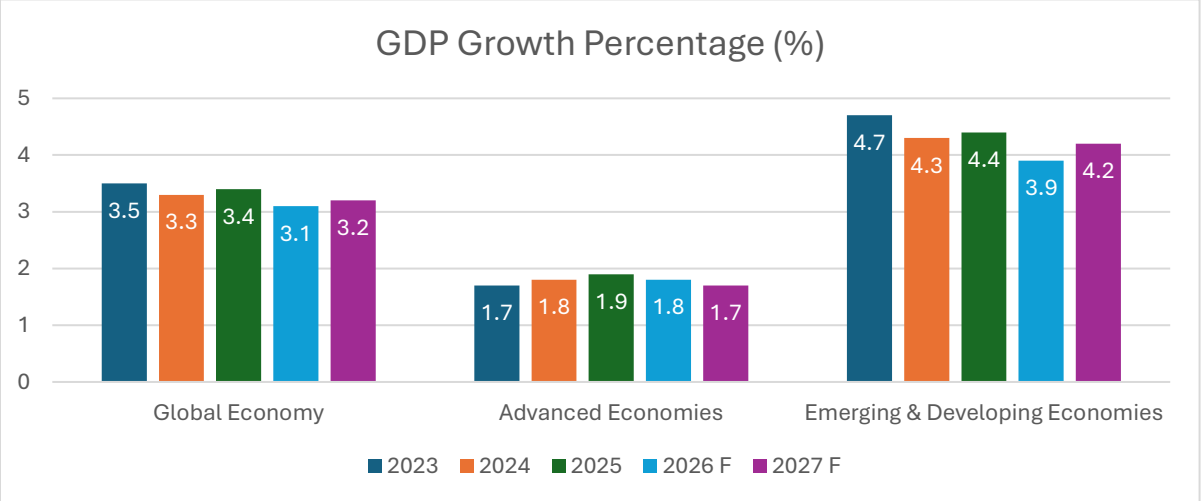

Note: F = Forecast
Source: IMF World Economic Outlook April 2026
Note: Advanced Economies and Emerging & Developing Economies are as per the classification of the World Economic Outlook (WEO). This classification is not based on strict criteria, economic or otherwise and it has evolved over time. It comprises of 40 countries under the Advanced Economies including the G7 (the United States, Japan, Germany, France, Italy, the United Kingdom and Canada) and selected countries from the Euro Zone (Germany, Italy, France etc.). The group of emerging market and developing economies (156) includes all those that are not classified as Advanced Economies (India, China, Brazil, Malaysia etc.)

Growth across the global economy is projected to remain resilient, though moderate over the forecast period. Global GDP growth declined from 3.5 percent in 2023 to 3.3 percent in 2024, before increasing marginally to 3.4 percent in 2025. However, growth is projected to moderate to 3.1 percent in 2026 before recovering slightly to 3.2 percent in 2027, reflecting the impact of geopolitical uncertainty, trade disruptions and cautious investment sentiment.

Growth in Advanced Economies is expected to remain relatively subdued, increasing from 1.7 percent in 2023 to 1.8 percent in 2024 and 1.9 percent in 2025, before moderating to 1.8 percent in 2026 and 1.7 percent in 2027. This reflects persistent structural constraints, tighter financial conditions and slower demand conditions across developed markets.

Emerging and Developing Economies are expected to continue to outperform advanced economies and remain the key drivers of global growth. Growth declined from 4.7 percent in 2023 to 4.3 percent in 2024, before improving to 4.4 percent in 2025. However, it is projected to moderate to 3.9 percent in 2026 and recover to 4.2 percent in 2027, reflecting short-term pressures arising from geopolitical risks, commodity price volatility and external financing constraints, followed by a gradual improvement in macroeconomic conditions.

1.1 GDP Growth Across Major Regions

GDP growth across major global regions—including Europe, Latin America & the Caribbean, Middle East & Central Asia and Sub-Saharan Africa—continues to display varied trajectories. The global outlook presents a mixed scenario, with emerging economies continuing to outperform advanced economies.

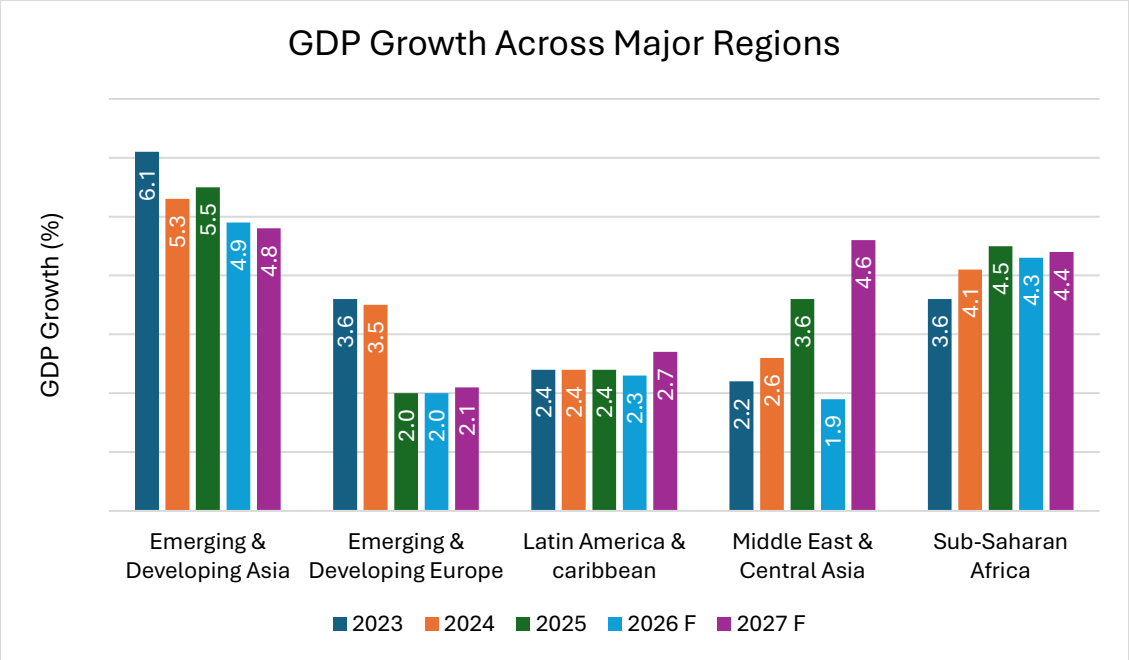

Note: F = Forecast
Source: IMF World Economic Outlook April 2026 update

Growth across Emerging Market and Developing Economies is projected to moderate from 4.4 percent in 2025 to 3.9 percent in 2026, before recovering to 4.2 percent in 2027, reflecting near-term pressures from global uncertainty, geopolitical risks and tighter financial conditions, followed by a gradual rebound.

Within this, Emerging and Developing Asia is expected to remain the fastest-growing region, although growth is projected to ease from 5.5 percent in 2025 to 4.9 percent in 2026 and 4.8 percent in 2027, reflecting moderation in regional momentum. China's growth is projected to decelerate from 5.0 percent to 4.4 percent and further to 4.0 percent over the period, driven by structural headwinds and softer domestic demand, while India is expected to remain resilient, with growth moderating from 7.6 percent in 2025 to 6.5 percent in 2026 and remaining at that level in 2027, supported by domestic demand and investment activity.

Emerging and Developing Europe is projected to remain relatively stable, with growth at 2.0 percent in 2025 and 2026, improving marginally to 2.1 percent in 2027. Russia is also expected to record modest growth, rising from 1.0 percent in 2025 to 1.1 percent in both 2026 and 2027.

Latin America and the Caribbean is projected to witness moderate growth, easing slightly from 2.4 percent in 2025 to 2.3 percent in 2026, before recovering to 2.7 percent in 2027. Within the region, Brazil's growth is expected to soften from 2.3 percent to 1.9 percent in 2026 before improving to 2.0 percent in 2027, while Mexico is projected to show a stronger rebound, increasing from 0.6 percent in 2025 to 1.6 percent in 2026 and 2.2 percent in 2027.

Growth in the Middle East and Central Asia is projected to slow sharply from 3.6 percent in 2025 to 1.9 percent in 2026, before rebounding significantly to 4.6 percent in 2027, indicating volatility linked to geopolitical conditions and oil market dynamics. Saudi Arabia mirrors this trend, with growth moderating from 4.5 percent in 2025 to 3.1 percent in 2026 before recovering to 4.5 percent in 2027.

Sub-Saharan Africa is expected to remain relatively stable, with growth moderating slightly from 4.5 percent in 2025 to 4.3 percent in 2026 and recovering marginally to 4.4 percent in 2027. Nigeria is projected to improve gradually from 4.0 percent to 4.3 percent over the period, while South Africa is expected to post subdued growth, easing from 1.1 percent in 2025 to 1.0 percent in 2026 before improving to 1.3 percent in 2027. Overall, the projections indicate that while emerging markets face short-term pressures, growth recovery is expected to strengthen in several regions by 2027.

India and Top 4 Global Economies GDP Growth Forecast

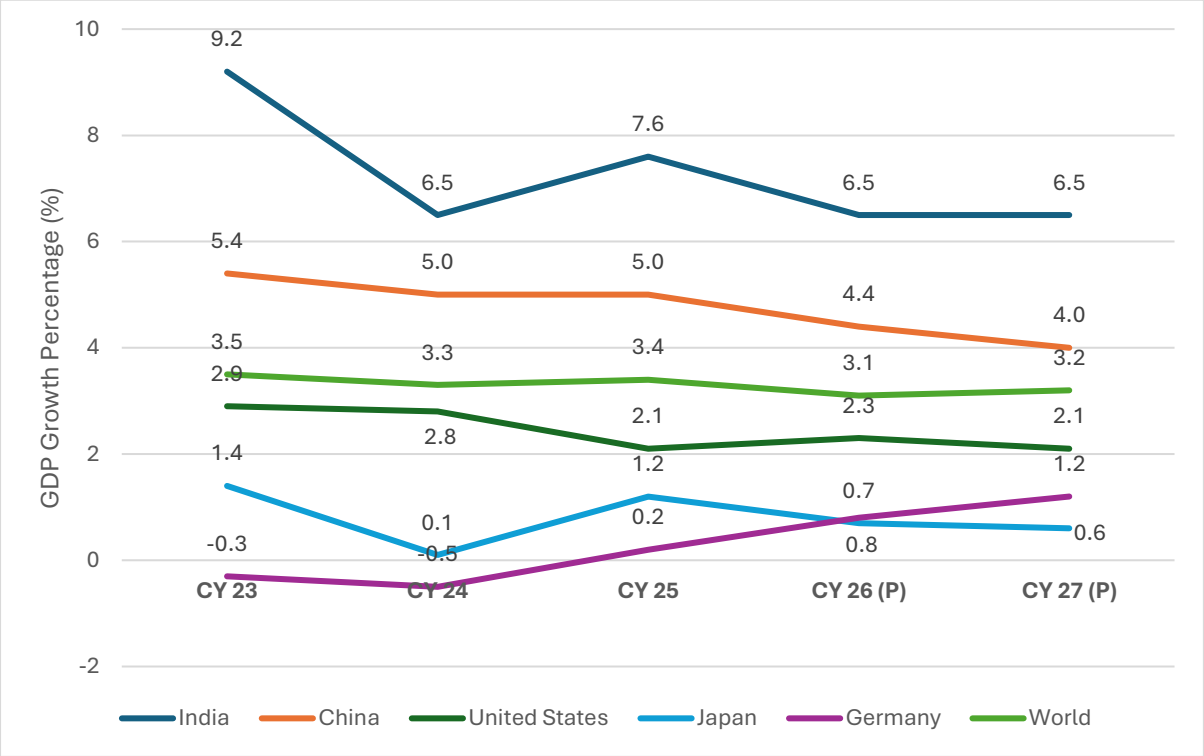

Note: P = Projections
Source: IMF World Economic Outlook April 2026 update

Overall, the outlook indicates that while global growth is expected to soften in the near term, resilience in emerging markets and a gradual recovery thereafter are expected to support global economic momentum over the medium term.

2. India's Macroeconomic Scenario

2.1 Gross Domestic Product (GDP)

According to the latest Second Advance Estimates by MOSPI, GOI (27 Feb26), after replacing old base year 2011-12 by the new base year 2022–23, real GDP has been estimated to grow by 7.6% in FY 2025-26. Nominal GDP has witnessed a growth of 8.6%. These growth rates are revised upward from their respective First Advance Estimates computed using previous Base Year (2011-12).

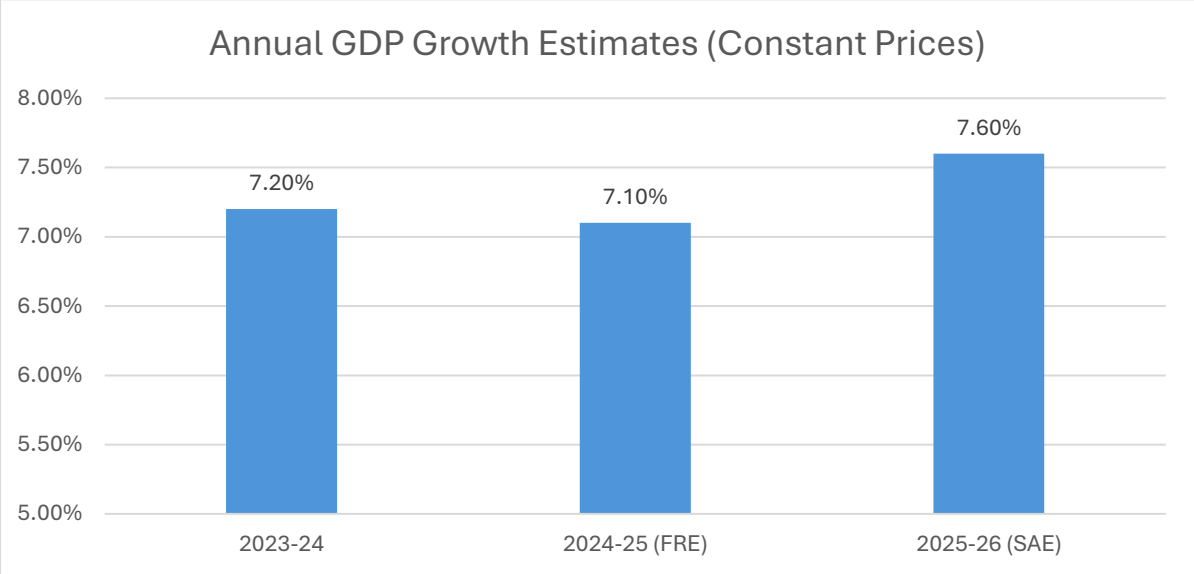

Note: FRE - First Revised Estimates; SAE - Second Advance Estimate
Source: New Series of Gross Domestic Product (GDP) Estimates with Base Year 2022-23 by MOSPI, PIB Press Release dated 27 February 2026)

India's Economic Growth Momentum Remains Strong - Surpassed USD 4 Trillion.

In June 2025, India became the fourth-largest economy in the world and retained its position as the fastest-growing major economy. The country is projected to become the world's third largest economy by 2030, with an estimated GDP of USD 7.3 trillion.
Source: PIB, Press Release - India Becoming an Economic Powerhouse posted on June 16, 2025

India achieved a significant milestone by overtaking Japan to become the third most powerful nation in the Asia-Pacific region, as per the Asia Power Index 2024. India's overall score rose to 39.1, reflecting a 2.8-point increase from the previous year, driven by growing influence across economic, military and diplomatic dimensions.

Source: PIB, Press Release - India becomes 3rd Most Powerful Nation in Asia, Surpasses Japan in Asia Power Index posted on September 24, 2024

Key factors behind India's rise include its strong economic performance, expanding and youthful workforce and increasing strategic engagement across the region. India's Economic Capability improved significantly, supported by its position as the world's third-largest economy in terms of purchasing power parity (PPP). Additionally, a notable increase in its Future Resources score highlights the demographic advantage that is expected to sustain its growth trajectory in the coming years.

2.2 Gross Value Added (GVA)

According to the Second Advance Estimate of GDP for 2025-26 by MOSPI, Govt. of India (GoI), Real GVA is estimated at INR 294.40 lakh crore in the year 2025-26, against INR 273.36 lakh crore in FY 2024-25, registering a growth rate of 7.7% as compared to 7.3% growth rate in 2024-25. Nominal GVA is estimated to attain a level of INR 313.61 lakh crore during FY 2025- 26, against INR 288.54 lakh crore in 2024-25, showing a growth rate of 8.7%.

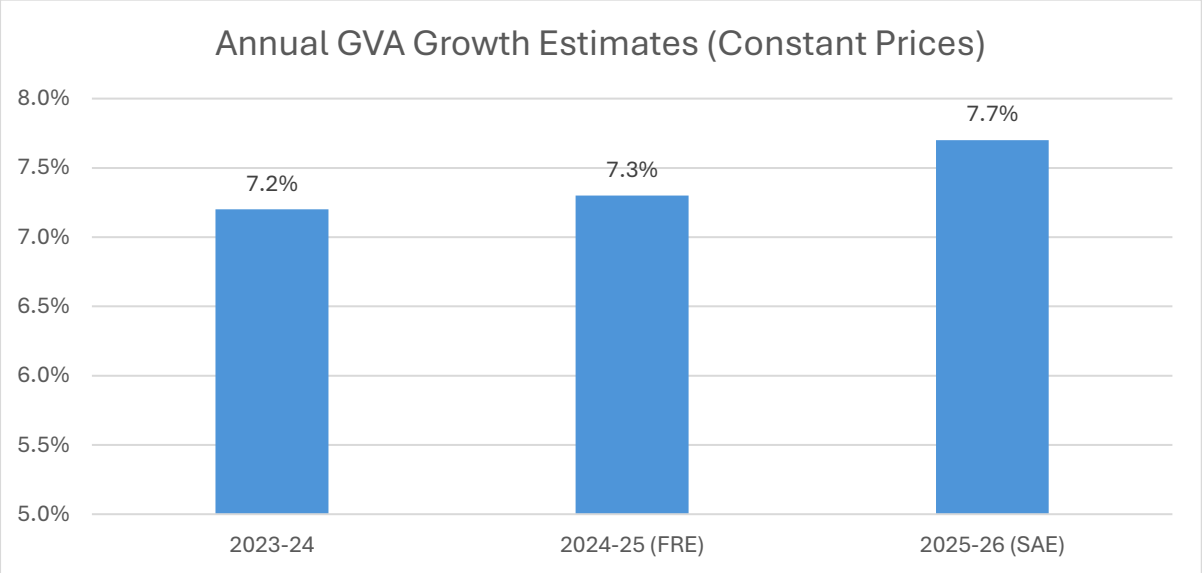

Note: FRE - First Revised Estimates; SAE - Second Advance Estimate
Source: New Series of Gross Domestic Product (GDP) Estimates with Base Year 2022-23 by MOSPI, PIB Press Release dated 27 February,2026)

Major Highlights:

- Real GDP has been estimated to grow by 7.6% in FY 2025-26. Nominal GDP has witnessed a growth of 8.6%. These growth rates are revised upward from their respective First Advance Estimates computed using previous Base Year (2011-12).
- Overall Economic performance in FY 2025-26 is primarily on account of robust Real growth observed in Second Quarter (8.4%) and Third Quarter (7.8%).
- The Economy has exhibited sustained performance, recording Real GDP growth rates of 7.2% and 7.1% respectively during FY 2023–24 and FY 2024–25.
- Nominal GDP has registered 11.0% and 9.7% growth rates during FY 2023–24 and FY 2024–25 respectively.
- Manufacturing sector has been the major driver in contributing to the resilient performance of the economy in consecutive 3 financial years after rebasing. This sector has attained double digit growth rates in FY 2023-24 and FY 2025-26.
- Secondary and Tertiary sectors have boosted the performance of the economy by registering above 9.0% growth rate in FY 2025-26.
- 'Trade, Repair, Hotels, Transport, Communication & Services related to Broadcasting, Storage' sector has attained a growth rate of 10.1% at Constant Prices in FY 2025-26.
- On the Consumption side, both the Private Final Consumption Expenditure (PFCE) and Gross Fixed Capital Formation (GFCF) have exhibited more than 7.0% growth rate in FY 2025-26.

Source: MOSPI, Press Release, 27 February 2026, Govt. of India (GoI).

2.3 Overview on Key Demographic Parameters

2.3.1 Population growth

India's economic trajectory and consumption dynamics are closely tied to its demographic shifts. India's population expanded from approximately 0.75 billion in 1984 to 1.45 billion in 2024 and is further reached around 1.47 billion in 2025, consolidating its position as the world's most populous nation. This sustained growth underlines the emergence of a vast labour force and consumer base, which is essential for driving long-term economic growth, supporting rising consumption demand and strengthening the country's overall economic potential.

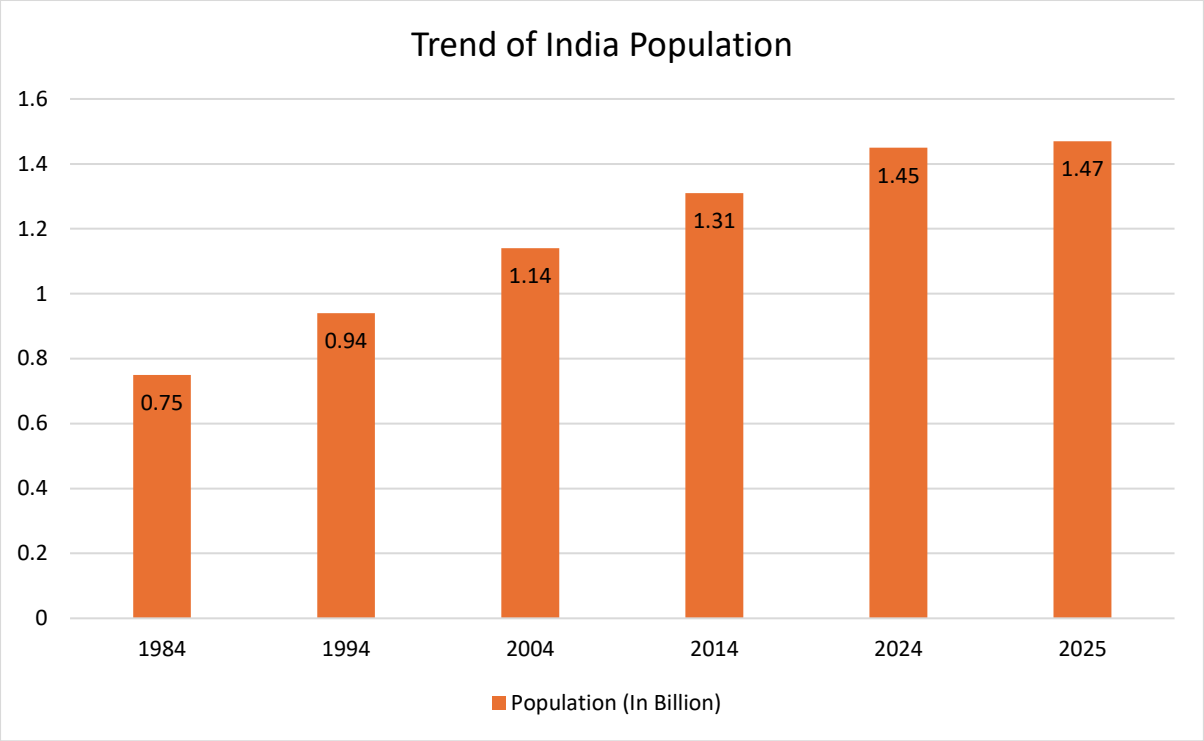

Source: World Bank Database. Population Data 2025 - Worldometer, Infomerics Analytics & Research

2.3.2 Labour Force in India

India's labour force has experienced steady growth over the past decade. In 2010, the total labour force was approximately 467.56 million. By 2025, this number had increased to 617.63 million.

This upward trend underscores the expanding working-age population, improving labour force participation and gradual recovery in employment post the pandemic period. The sharp increase observed after 2020 highlights the rebound in economic activity and rising workforce engagement across sectors. However, it also emphasizes the need for sustained job creation to effectively absorb the growing labour pool.

The labour force participation rate (LFPR) has also witnessed variations over time due to changing socio-economic conditions, including urbanization, education levels and sectoral employment shifts.

These trends highlight the importance of implementing policies that not only generate employment opportunities but also improve job quality, productivity and inclusivity across key sectors of the economy.

(The rest of the page is intentionally left blank)

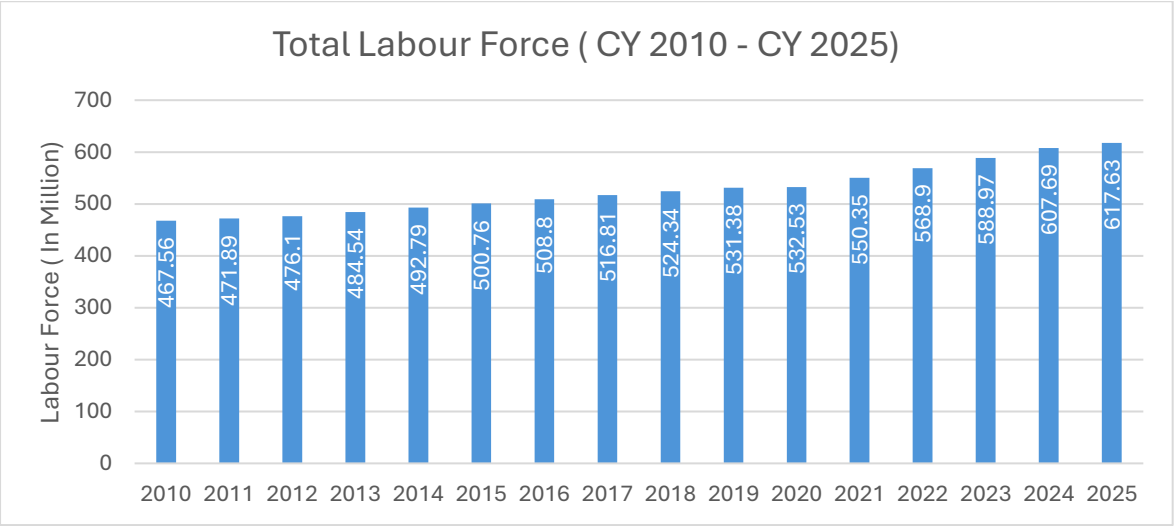

Source: World Bank Database

2.3.3 Disposable Income and Consumer Spending

Gross National Disposable Income (GNDI) represents the total income available to a nation's residents for consumption and saving after accounting for income transfers with the rest of the world. Per Capita GNDI has shown a consistent upward trajectory, rising from INR91,843 in FY14 to INR2,48,572 in FY26 (SAE). In FY25 (FRE), Per Capita GNDI stood at INR2,30,474, which further increased to INR2,48,572 in FY26 (SAE), reflecting a growth of approximately 7.9%. This steady increase indicates that households and businesses had more income at their disposal, which is critical for supporting both consumption and savings: key components of economic resilience and expansion.

The rise in GNDI has translated into higher consumer spending, as reflected in the growth of Private Final Consumption Expenditure (PFCE), which measures the total value of goods and services consumed by households. Per Capita PFCE has also maintained a consistent upward trend, growing from INR51,701 in FY14 to INR1,37,813 in FY26 (SAE). In FY25 (FRE), Per Capita PFCE stood at INR1,27,627, which further increased to INR1,37,813 in FY26 (SAE), reflecting a growth of approximately 8.0%, highlighting strong consumer confidence and robust domestic demand.

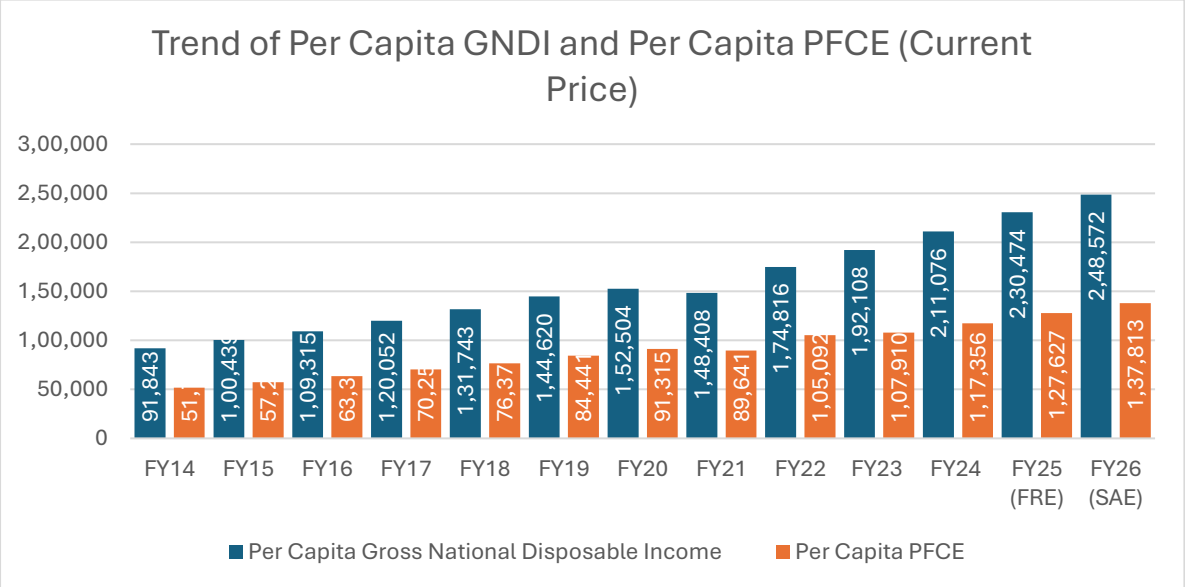

Note: Data mentioned is in INR, FRE – First Revised Estimates, SAE – Second Advanced Estimates
Source: PIB, New Series of Gross Domestic Product (GDP) Estimates with Base Year 2022-23

2.3 Union Budget FY26-27 Highlights

The Union Budget FY 2026–27, presented by Finance Minister Nirmala Sitharaman, introduces a comprehensive set of measures aimed at stimulating economic growth, enhancing infrastructure and fostering inclusive development. With a focus on sectors such as agriculture, MSMEs, infrastructure, innovation and exports, the budget seeks to create a conducive environment for sustained economic expansion.

- **Capital Expenditure and Infrastructure Development**
  In FY2026-27, the Union Budget has increased the public capex towards to INR 12.2 lakh crore from the previous INR 11.21 lakh crore (3.1% of GDP) which was earmarked in FY 2025–26. To strengthen the confidence of private developers regarding risks during infrastructure development and construction phase, the budget proposed to set up an Infrastructure Risk Guarantee Fund to provide prudently calibrated partial credit guarantees to lenders.

- **Support for MSMEs**
  Recognizing the pivotal role of Micro, Small and Medium Enterprises (MSMEs) in India's economic landscape, the budget introduced a three-pronged approach to support the sector. The budget introduced a dedicated INR 10,000 crore SME Growth Fund as well as proposed to top up the Self-Reliant India Fund set up in 2021, with INR 2,000 crore to continue support to micro enterprises and maintain their access to risk capital. With TReDS, more than INR 7 lakh crore has been made available to MSMEs. To leverage its full potential, the budget further proposed four measures: (i) mandate TReDS as the transaction settlement platform for all purchases from MSMEs by CPSEs, serving as a benchmark for other corporates; (ii) introduce a credit guarantee support mechanism through CGTMSE for invoice discounting on TReDS platform; (iii) link GeM with TReDS for sharing information with financiers about government purchases from MSMEs, encouraging cheaper and quicker financing; (iv) introduce TReDS receivables as asset-backed securities, helping develop a secondary market, enhancing liquidity and settlement of transactions. Moreover, Government will facilitate Professional Institutions such as ICAI, ICSI, ICMAI to design short-term, modular courses and practical tools to develop a cadre of 'Corporate Mitras', especially in Tier-II and Tier-III towns, which will help MSMEs meet compliance requirements at affordable costs.

- **Agriculture Related Schemes**
  To diversify farm outputs, increase productivity, enhance farmers' incomes and create new employment opportunities, the budget announced support schemes related to high value crops such as coconut, sandalwood, cocoa and cashew in coastal areas. Agar trees in Northeast and nuts such as, almonds, walnuts and pine nuts in hilly regions will also be supported. India is the world's largest producer of coconuts.

  About 30 million people, including nearly 10 million farmers, depend on coconuts for their livelihood. To further enhance competitiveness in coconut production, the Budget proposed a Coconut Promotion Scheme to increase production and enhance productivity through various interventions including replacing old and non-productive trees with new saplings/plants/varieties in major coconut growing States. A dedicated programme is proposed for Indian cashew and cocoa to make India self-reliant in raw cashew and cocoa production and processing, enhance export competitiveness and transform Indian Cashew and Indian Cocoa into premium global brands by 2030.
  Further, the Central Government will partner with State Governments to promote focused cultivation and post-harvest processing to restore the glory of the Indian Sandalwood ecosystem. To rejuvenate old, low-yielding orchards and expand high-density cultivation of walnuts, almonds and pine nuts, the budget announced to support a dedicated programme to enhance farmer incomes and in bringing value addition by engaging youth.

  The Union Budget FY 2026–27 presents a balanced approach to economic growth by addressing immediate consumption needs and laying the foundation for long-term sustainability. Through targeted investments in infrastructure, support for MSMEs and sector-specific initiatives, the budget aims to foster an inclusive and resilient economy. These measures are expected to create new opportunities for financial institutions, as the growing demand for investment products will provide avenues for expansion and innovation in the financial services sector.

(The rest of the page is intentionally left blank)

3. Industry Overview – Processed Food Industry with respect to Jaggery, Khandsari & Instant Premix

3.1 Introduction

The processed food industry represents a significant and evolving component of the agri-food economy, encompassing the transformation of agricultural produce into safe, hygienic and value-added food products that meet modern consumption needs. Within this broader industry, the jaggery industry occupies an important niche, bridging traditional food processing practices with organised and semi-organised food markets. By converting sugarcane juice into a natural sweetener through relatively minimal processing, the jaggery segment supports farm livelihoods, rural enterprises and decentralised production systems, while aligning with growing consumer preference for natural, less refined and culturally familiar food products. As dietary awareness increases and demand for alternative sweeteners rises, jaggery and khandsari gained relevance within the processed food ecosystem.

The jaggery, khandsari and instant premix industry comprises a diverse range of products catering to both traditional and evolving consumer preferences. The segment includes conventional jaggery in solid, powdered, granulated and liquid forms, khandsari sugar as a minimally processed sweetener and instant premixes formulated for the convenient preparation of beverages, desserts and other food products. While jaggery and khandsari serve as staple sweetening agents across households and traditional food applications, instant premixes address the growing demand for convenience, consistency, improved shelf life and ease of preparation among urban consumers, food service establishments and institutional buyers.

Beyond direct consumption, the industry plays a significant role in the processed food value chain by providing a stable market for sugarcane producers, supporting rural livelihoods and employment, encouraging value addition through processing and packaging and reducing post-harvest losses. The increasing adoption of quality standards, mechanised processing, branded offerings and innovative product formats is gradually transforming the sector from a predominantly unorganised, commodity-driven market into a more organised, value-added and quality-focused segment within India's processed food industry.

3.2 Market Segmentation – Jaggery, Khandsari & Instant Premix

Segmentation Type	Segments	Description
By Product Category	Jaggery	Includes conventional jaggery available in solid, powdered, granulated and liquid forms manufactured from concentrated sugarcane juice. Widely consumed across households, food service establishments and food processing industries, demand is driven by increasing preference for natural sweeteners, traditional consumption patterns, health consciousness and the growing availability of branded and packaged products.
	Khandsari Sugar	Comprises minimally processed sugar produced from sugarcane with relatively lower levels of refining compared to white sugar. It is widely used in households, confectionery, bakery, sweet manufacturing and food processing applications where consumers seek a more natural alternative to refined sugar. Growth is supported by increasing awareness of traditional sweeteners and demand from small-scale food manufacturers.
	Instant Premixes	Covers ready-to-use premixes formulated for beverages, desserts, traditional drinks and food preparations incorporating jaggery, khandsari or other natural ingredients. The segment caters to consumers seeking convenience, consistency, improved shelf life and ease of preparation, with demand driven by urban lifestyles, institutional consumption and the expansion of organised retail.
By Distribution Type	Offline Market	Includes traditional trade channels such as mandis, wholesalers, distributors, kirana stores and modern retail outlets including supermarkets and hypermarkets. This segment continues to account for the majority of sales owing to its extensive reach, established supply chain and strong demand from rural consumers, food service establishments and institutional buyers.

	Online Market	Comprises e-commerce platforms, quick commerce channels and direct-to-consumer brands offering packaged jaggery, khandsari sugar and instant premixes. Growth is supported by increasing internet penetration, convenience, wider product availability and rising consumer preference for premium, organic and branded food products.
By Region	Urban Markets	Characterised by higher demand for packaged, branded and value-added products including powdered jaggery, liquid jaggery, premium khandsari sugar and instant premixes. Growth is supported by increasing health awareness, higher disposable incomes, organised retail expansion and preference for convenient food products.
	Semi-Urban & Rural Markets	Represent the traditional consumption base for jaggery and khandsari products, supported by widespread household usage, local trade networks and agricultural linkages. Demand is driven by affordability, cultural food habits and increasing penetration of packaged products through expanding retail infrastructure.
By End Use Industry	Household Consumption	Includes the use of jaggery, khandsari sugar and instant premixes for daily cooking, sweetening beverages, preparation of traditional sweets and ready-to-make food products. This segment forms the largest consumption base and is influenced by household purchasing power, seasonal demand and consumer preference for natural sweeteners.
	Pharmaceutical, Ayurvedic & Nutraceutical	Includes the use of jaggery and khandsari as natural sweetening and binding agents in Ayurvedic medicines, herbal formulations, nutraceutical products, health supplements and functional foods. Demand is supported by growing consumer preference for natural ingredients and the expansion of preventive healthcare and wellness products.
	Food Processing & Food Service	Comprises manufacturers of confectionery, bakery products, dairy products, beverages, snacks, sweets, restaurants, hotels and catering services using jaggery, khandsari sugar and instant premixes as ingredients. Growth is driven by increasing demand for clean-label products, product innovation and expansion of the organised food processing industry.
	Industrial & Institutional Buyers	Covers bulk procurement by educational institutions, hospitals, defence establishments, corporate cafeterias, religious institutions and industrial food manufacturers. Demand is driven by large-scale consumption requirements, cost efficiency, standardised quality and long-term procurement contracts.

3.3 Operational Flow Analysis

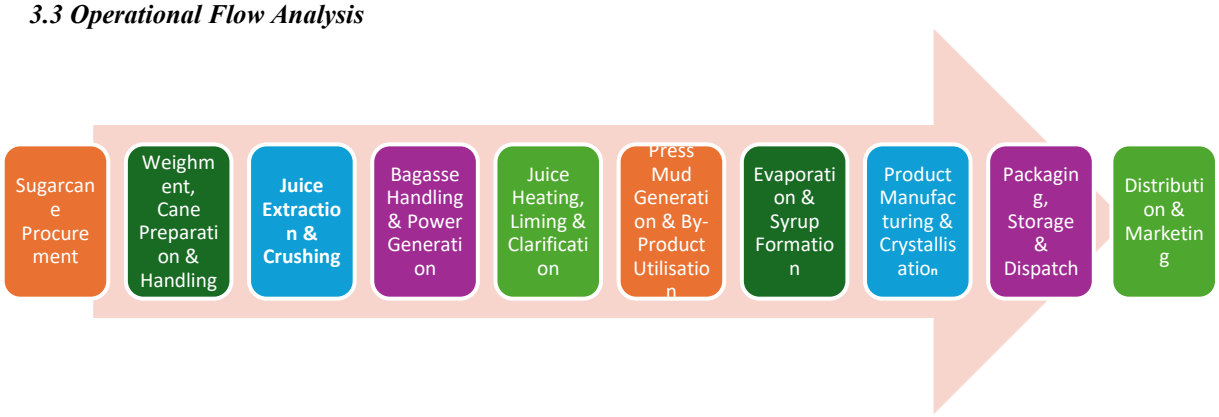

The jaggery, Khandsari and Instant Premix operates through an integrated multi-stage value chain encompassing sugarcane procurement, juice extraction, clarification, thermal processing, crystallisation, packaging, distribution and by-product utilisation. The efficiency, profitability and product quality within the industry are significantly influenced by the level of operational integration, recovery efficiency, energy optimisation and utilisation of by-products such as bagasse and press mud across various stages of the manufacturing process.

1. **Sugarcane Procurement**
   The value chain commences with procurement of sugarcane from farmers and nearby cane-growing regions. Due to the highly perishable nature of sugarcane and the rapid decline in sucrose content after harvesting, procurement is generally localised and closely integrated with crushing operations. Harvested sugarcane is transported to the manufacturing facility through tractors and trucks, enabling timely processing and minimising recovery losses.

2. **Weighment, Cane Preparation & Handling**
   Upon arrival at the manufacturing facility, sugarcane is weighed at weighbridges to record the quantity received. Thereafter, the cane undergoes preparation activities including chopping, shredding and fibrisation to increase surface area and improve extraction efficiency. Efficient cane preparation supports higher juice recovery and operational productivity.

3. **Juice Extraction & Crushing**
   Prepared sugarcane is crushed through multi-stage milling systems to extract raw juice. This stage represents the core processing activity within the value chain and significantly impacts overall sugar recovery and production economics. During crushing, fibrous residue known as bagasse is generated as a major by-product. Typically, from 100 kg of sugarcane processed, approximately 30–40 kg of bagasse may be generated depending on cane quality and recovery efficiency.

4. **Bagasse Handling & Power Generation**
   Bagasse generated during crushing is conveyed to boilers and utilised as fuel for generation of steam and electricity required for captive consumption within the manufacturing facility. Utilisation of bagasse reduces dependence on external fuel sources and enhances energy efficiency of operations. Surplus bagasse may also be stored and sold to external industries as industrial fuel, thereby creating an additional revenue stream. Further, ash generated from combustion of bagasse is sold to brick manufacturers and construction-related industries, supporting resource optimisation and circular economy practices.

5. **Juice Heating, Liming & Clarification**
   The extracted raw juice undergoes heating and treatment with lime and other clarifying agents to remove impurities and suspended solids. The treated juice is transferred to clarifiers where impurities settle down through sedimentation. This stage is critical in determining the colour, purity, texture and shelf life of the final products. Post clarification, the juice becomes suitable for concentration and crystallisation processes.

6. **Press Mud Generation & By-product Utilisation**
   The impurities separated during clarification are combined with small quantities of bagasse to produce press mud, which emerges as another commercially valuable by-product. Press mud is widely utilised in the agricultural sector as organic manure and soil conditioner owing to its nutrient-rich composition. Effective utilisation of press mud supports waste minimisation and provides incremental revenue opportunities for manufacturers.

7. **Evaporation & Syrup Formation**
   The clarified juice undergoes concentration in multiple-effect evaporators to remove excess moisture and form thick syrup. This controlled evaporation stage improves process efficiency, reduces energy consumption and prepares the syrup for subsequent crystallisation and product manufacturing processes.

8. **Product Manufacturing & Crystallisation**

   a) **Jaggery Powder**
      For jaggery powder production, the thick syrup is concentrated under reduced pressure in vacuum pans followed by controlled crystallisation using slurry. The crystallised mass is cooled in crystallisers to facilitate crystal growth and thereafter processed through centrifugation to separate molasses from jaggery crystals. The crystals are subsequently dried and converted into fine jaggery powder through powdering units. A portion of the jaggery powder produced may also be captively consumed for manufacturing jaggery-based premix products, enabling downstream value addition and product diversification

   b) **Khandsari Sugar**
      For khandsari sugar production, the thick syrup is further concentrated in open pans through controlled heating. Natural crystallisation occurs during gradual cooling without the addition of slurry, resulting in formation of sugar crystals. The crystallised mass is centrifuged to separate molasses, followed by drying through hot and cold air treatment and grading based on crystal size and quality specifications.

c) Instant Premix

For instant premix production, jaggery powder, khandsari sugar and other ingredients such as coffee, tea, milk solids, cocoa, spices, flavouring agents or nutraceutical ingredients, depending on the product formulation, are blended in predetermined proportions using automated mixing systems to achieve uniform composition and consistency. The blended mixture undergoes quality testing to ensure homogeneity, moisture content and product stability before being packed into sachets, pouches or bulk packaging formats. Instant premixes are designed to provide convenience, standardised taste, longer shelf life and ease of preparation for consumers as well as institutional and food service customers. The production of instant premixes enables manufacturers to undertake downstream value addition, diversify product offerings, improve realisations and cater to the growing demand for ready-to-use food and beverage products across domestic and export markets.

9. Packaging, Storage & Dispatch

Finished jaggery powder and khandsari sugar are packed in bulk packaging formats and stored under controlled dry conditions to maintain product quality, texture and shelf life. The products are thereafter dispatched primarily to wholesalers, institutional buyers and B2B customers.

10. Distribution & Marketing

Distribution of jaggery powder and khandsari sugar takes place through diversified channels including wholesalers, agricultural mandis, food processors, sweet manufacturers, institutional buyers, hotels, caterers and retail distributors. Increasing health consciousness and preference for traditional sweeteners have also supported growth through organised retail and online distribution channels. Product pricing across channels is influenced by sugarcane availability, seasonality, recovery rates, regional demand-supply dynamics, quality grades, packaging formats and transportation costs.

3.4 Market Trends in Jaggery, Khandsari & Instant Premix

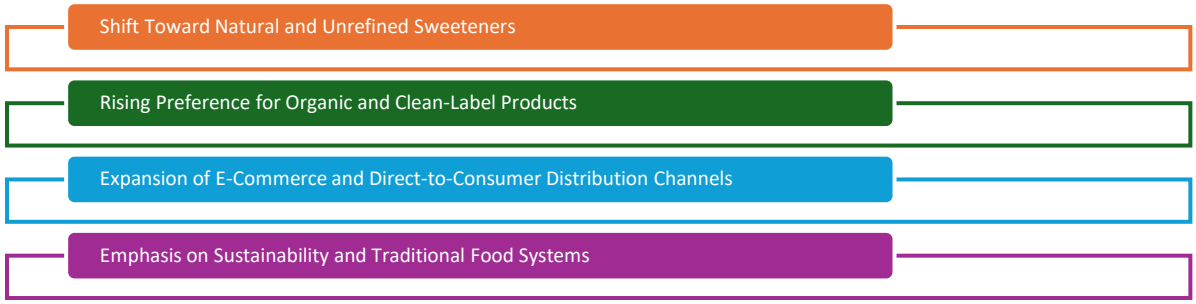

The jaggery, khandsari & Instant Premix segment is undergoing a gradual transformation, driven by evolving consumer preferences, increasing awareness of natural and minimally processed food products and the growing emphasis on sustainable and traditional sweeteners. While jaggery and khandsari have historically been consumed primarily in specific geographies, its relevance and visibility in international markets are expanding as part of broader trends within the global food and sweetener ecosystem.

1. Shift Toward Natural and Unrefined Sweeteners

The food manufacturing sector presents a significant opportunity for organised manufacturers of jaggery, khandsari and instant premixes. As food processing companies increasingly adopt clean-label formulations and reduce dependence on refined sugar, natural sweeteners are being incorporated into bakery products, confectionery, dairy products, beverages, breakfast cereals, snack bars and traditional food preparations. At the same time, instant premixes formulated using jaggery or khandsari are witnessing growing demand from consumers seeking convenience without compromising on natural ingredients.

- Consistent product specifications, including controlled moisture, microbial quality, sweetness profile and year-round availability, have become key procurement criteria for food manufacturers and institutional buyers.
- The use of jaggery and khandsari enables manufacturers to position products with claims such as "No Refined Sugar", "Naturally Sweetened" and "Traditional Ingredients", while instant premixes provide ready-to-use solutions aligned with modern consumption patterns and convenience-oriented lifestyles.

2. **Rising Preference for Organic and Clean-Label Products**
Consumers are increasingly preferring packaged, hygienically processed and organically certified jaggery, khandsari and instant premix products that offer transparency in sourcing and manufacturing practices. This trend is supported by growing health awareness, preference for minimally processed foods and increasing demand for products free from artificial additives and preservatives. Manufacturers are strengthening their market positioning through quality certifications, improved packaging and traceability, while introducing premium product variants targeted at health-conscious consumers and organised retail channels.

3. **Expansion of E-Commerce and Direct-to-Consumer Distribution Channels**
The rapid expansion of organised retail, e-commerce platforms, quick commerce and direct-to-consumer distribution channels has significantly improved market access for branded jaggery, khandsari and instant premix products. These channels provide wider geographical reach, enhanced product visibility and greater consumer awareness regarding ingredients, nutritional benefits and quality certifications. The digital marketplace has also enabled manufacturers, including small and medium enterprises, to expand beyond regional markets and cater to a growing urban customer base seeking premium and convenience-oriented food products.

4. **Emphasis on Sustainability and Traditional Food Systems**
Growing emphasis on sustainable agriculture, responsible sourcing and traditional food systems has strengthened the market positioning of jaggery, khandsari and related value-added products. The industry supports rural livelihoods through sugarcane cultivation and local processing while promoting efficient utilisation of by-products such as bagasse and press mud. The combination of traditional manufacturing practices, resource optimisation and increasing adoption of environmentally responsible processing technologies is enhancing the long-term sustainability of the industry and reinforcing consumer preference for naturally processed sweetening products.

4. Indian Food Processed Industry w.r.t Jaggery, Khandsari & Instant Premix

The Indian food processing industry represents a critical link between agriculture and consumers, contributing significantly to value addition, employment generation and reduction of post-harvest losses. The sector encompasses a wide range of activities including processing, preservation, packaging and distribution of agricultural and food products. India's large agricultural base, diverse raw material availability, expanding domestic consumption and increasing export opportunities support the growth of the industry. The Government of India has undertaken policy initiatives to encourage investments in this sector, including permitting 100% foreign direct investment (FDI) under the automatic route in food processing and in trading of food products manufactured or produced in India. These measures, along with infrastructure development and regulatory support, have enhanced the attractiveness of the food processing industry for domestic and foreign investors.

4.1 Foreign Direct Investments in Food Processing Industry

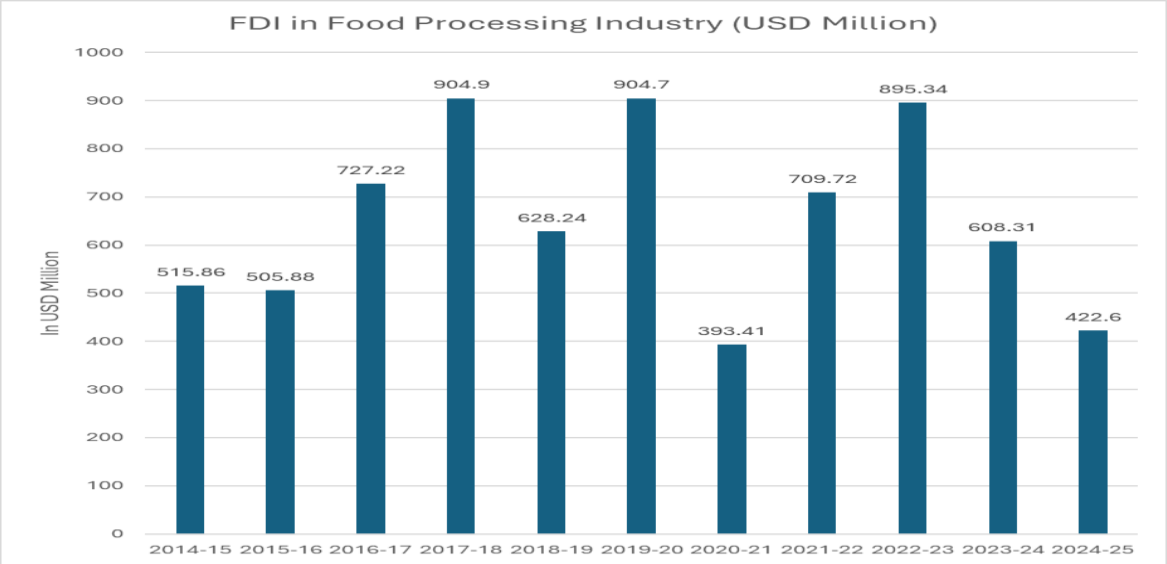

Source: Ministry of Food Processing Industries (MOFPI) Annual Report 2024-25, Infomerics Analytics & Research

4.2 Indian Jaggery, Khandsari & Instant Premix Segment

The jaggery, khandsari and instant premix industry is fundamentally dependent on sugarcane as its primary raw material and forms an important value-added segment within the sugarcane processing ecosystem. Jaggery and khandsari are manufactured directly from freshly extracted sugarcane juice through clarification, concentration and controlled crystallisation processes, while instant premixes utilise jaggery, khandsari or their derivatives as key ingredients in the formulation of ready-to-use food and beverage products. Accordingly, the availability, quality and pricing of sugarcane have a direct bearing on the production capacity, cost structure and profitability of manufacturers across these product segments.

Production of Sugarcane / Key Raw Materials

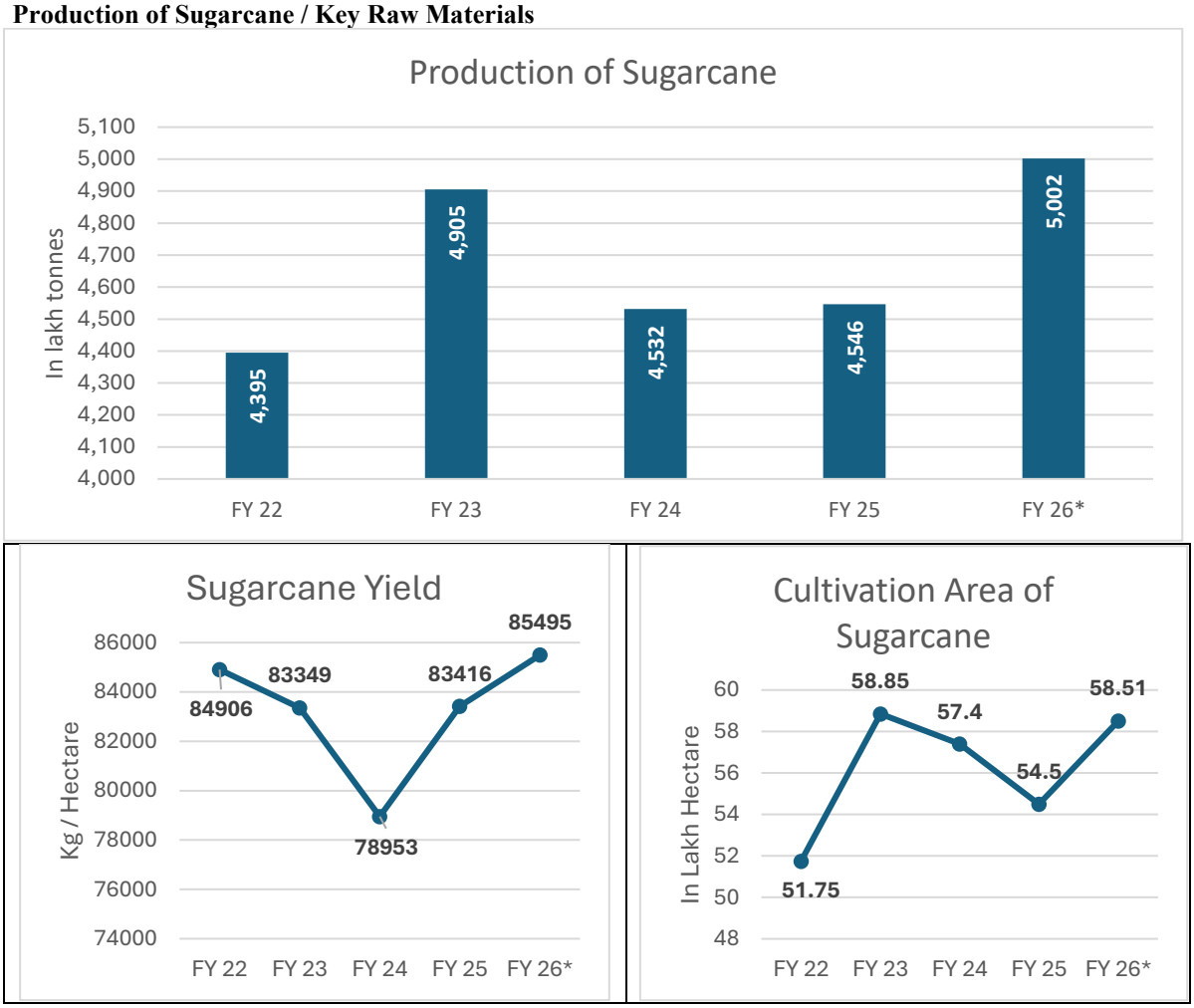

Source: UPAG- Department of Agriculture & Farmers Welfare, Infomerics Analytics and Research.
Note: Data for the year FY 2026 is of 2nd Advance Estimates.

Sugarcane production in India has exhibited an overall upward trend during the period from FY 22 to FY 26, despite interim fluctuations, with both yield levels and cultivation area broadly supporting production performance. Production increased from approximately 4,395 lakh tonnes in FY 22 to about 4,905 lakh tonnes in FY 23, despite a marginal decline in yield from around 84,906 kg per hectare to 83,349 kg per hectare, supported by a significant expansion in cultivation area from approximately 51.75 lakh hectares to 58.85 lakh hectares, indicating favourable agro-climatic conditions and increased acreage.

In FY 24, production declined to approximately 4,532 lakh tonnes, accompanied by a sharper reduction in yield to about 78,953 kg per hectare and a contraction in cultivation area to approximately 57.4 lakh hectares, reflecting the adverse impact of weather variability and sub-optimal rainfall conditions.

Production levels stabilised marginally in FY 25 at around 4,546 lakh tonnes, supported by a recovery in yield to approximately 83,416 kg per hectare, although cultivation area declined further to about 54.5 lakh hectares, partially offsetting the gains from improved productivity.

In FY 26, sugarcane production is estimated to increase significantly to about 5,002 lakh tonnes, representing the highest level during the period under review, alongside improvement in yield to approximately 85,495 kg

per hectare and expansion in cultivation area to about 58.51 lakh hectares, indicating recovery in agricultural productivity supported by improved climatic conditions and increased acreage under cultivation.

4.3 Production Trends

(A) Khandsari

Khandsari refers to a form of traditional, partially refined sugar obtained from sugarcane juice through a simple process of clarification, boiling and crystallization without undergoing full-scale refining as in plantation white sugar. It is characterized by its off-white to light brown colour, presence of residual molasses and a relatively coarse crystal structure.

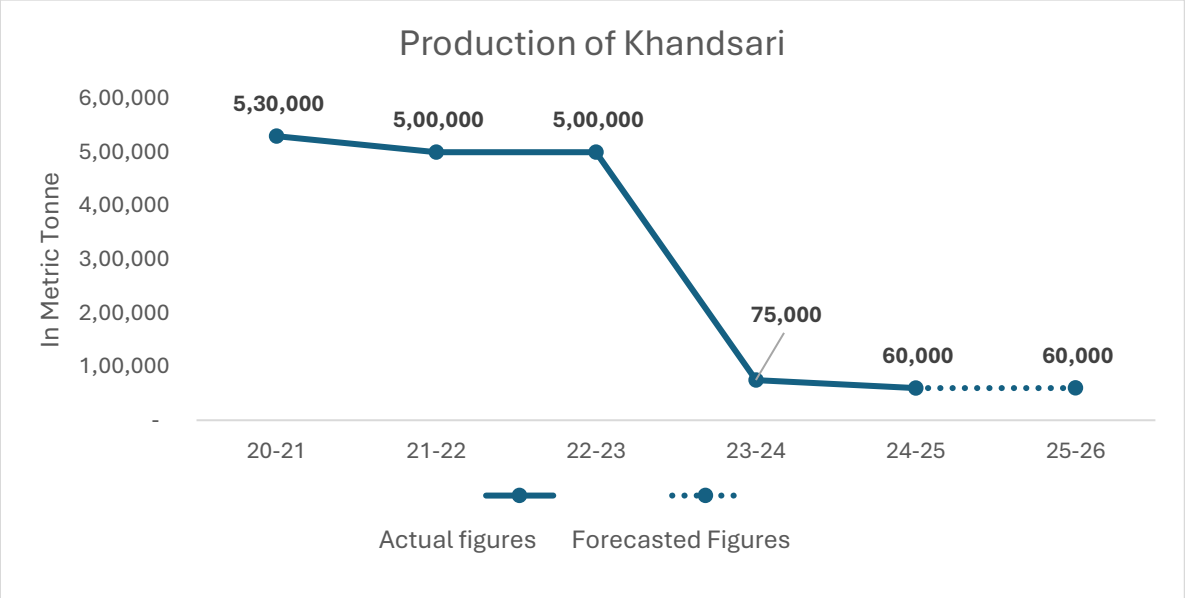

Source: USDA FAS Sugar Annual Reports.

The production of khandsari witnessed a declining trend. Production stood at approximately 5,30,000 metric tonnes in FY 2020-21, which marginally declined to 5,00,000 metric tonnes in FY 2021-22 and remained stable in FY 2022-23. However, production dropped significantly to 75,000 metric tonnes in FY 2023-24, representing a substantial contraction compared to previous years.

The decline in khandsari production is because of changing consumer preferences, increasing health consciousness and growing demand for natural and minimally processed sweeteners such as jaggery powder and specialty sugarcane-based products. Industry participants are increasingly focusing on higher-margin value-added products, product diversification and organised processing capabilities, resulting in a gradual shift away from conventional khandsari production. Despite the moderation in production volumes, the khandsari segment continues to maintain relevance within the broader sugarcane processing industry due to its strong presence in regional markets, traditional consumption patterns and usage across food processing applications.

(B) Instant Premix (Ready to Eat)

The instant premix and ready-to-eat (RTE) segment constitute an important component of the food processing industry and addresses the increasing demand for convenient, consistent, and time-efficient food solutions. Instant premixes are semi-processed food products designed for quick preparation, requiring minimal cooking or simple additions such as water or milk, including products such as instant jaggery-based coffee or tea premixes and instant rice kheer premixes. In contrast, ready-to-eat products are fully processed and packaged foods intended for direct consumption without any further preparation. These product categories rely on advanced food processing, preservation, and packaging technologies to extend shelf life while maintaining product quality, taste, and nutritional attributes.

(The rest of the page is intentionally left blank)

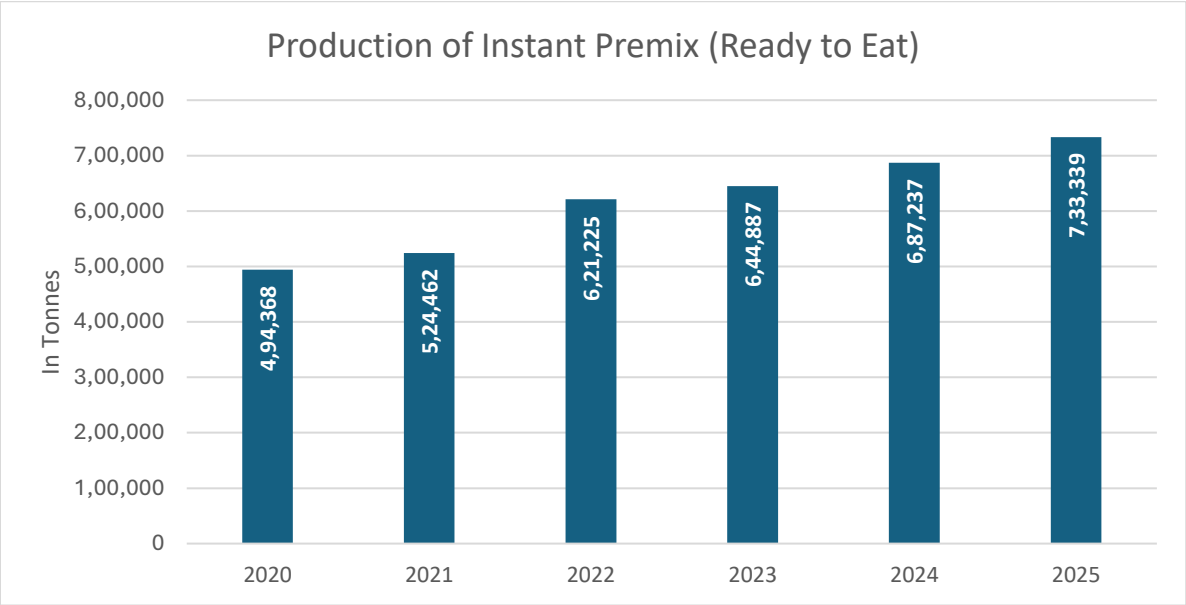

Source: CMIE, Infomerics Analytics and Research.

The production of instant (ready-to-eat) food in India has exhibited a sustained upward trend over the period from FY2019-20 to FY2024-25, increasing from approximately 4,94,000 tonnes to about 7,33,000 tonnes, reflecting a growth of nearly 48% over six years. The year-on-year progression indicates steady capacity expansion and rising consumer demand, with moderate growth observed in the initial years followed by sharper increases during FY2021-22 and continued incremental gains thereafter. This consistent rise underscores the structural shift in consumer food consumption patterns towards convenience-oriented products, driven by urbanisation, time-constrained lifestyles, increasing nuclear households and greater workforce participation. The absence of significant volatility over the period suggests demand resilience and maturation of the ready-to-eat segment within the packaged food industry. Overall, the production trend highlights strong long-term growth visibility for instant food products in India, supported by improving distribution reach, product acceptance and ongoing investments in food processing infrastructure.

4.4 Trade Dynamics of Jaggery & Khandsari

The trade dynamics of the jaggery and khandsari industry are influenced by domestic production, raw material availability and export demand, with trade flows shaped by sugarcane output, product quality, pricing competitiveness and regulatory compliance. Export demand for natural, minimally processed and traditional sweeteners, including packaged, branded and organic variants of jaggery and khandsari, continues to support international trade. The industry's trade performance is further influenced by seasonal sugarcane availability, adherence to food safety and quality standards, certification requirements, and the ability of manufacturers to ensure consistent product quality, packaging and timely supply to domestic and overseas markets.

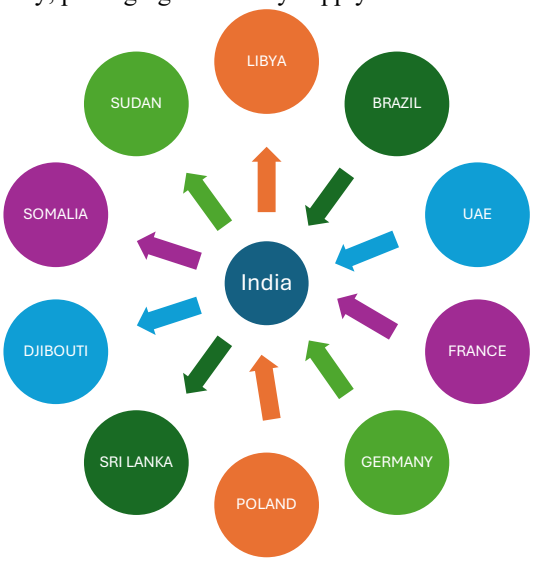

Top Export Destination	CY 2025 (USD Million)	Market Share	Top Import Destination	CY 2025 (USD Million)	Market Share
LIBYA	283.95	13%	BRAZIL	1,207.83	98.06%
SUDAN	251.42	12%	U ARAB EMTS	8.10	0.66%
SOMALIA	245.75	12%	FRANCE	4.88	0.40%
DJIBOUTI	195.07	9%	GERMANY	3.63	0.29%
SRI LANKA DSR	158.31	7%	POLAND	2.89	0.23%
OTHERS	999.47	47%	OTHERS	4.44	0.36%
Total	**2133.97**	**100%**	**Total**	**1231.77**	**100%**

Source: MEIDB, Infomerics Analytics and Research

The Indian trade profile of jaggery and khandsari in CY 2025 reflects a geographically concentrated export base alongside a highly skewed import structure.

On the export front, total exports stood at USD 2,133.97 million, with a diversified destination mix. Key export markets include Libya (13%), Sudan (12%) and Somalia (12%), followed by Djibouti (9%) and Sri Lanka (7%). Notably, the "Others" category constitutes the largest share at 47%, indicating a fragmented demand base across multiple smaller markets. The concentration of exports towards African and neighbouring developing economies suggests demand driven by traditional consumption patterns and price competitiveness.

On the import side, total imports were recorded at USD 1,231.77 million, exhibiting a highly concentrated structure. Brazil dominates global imports with a significant share of 98.06%, indicating near-monopolistic import dependence. Other importing countries such as the United Arab Emirates (0.66%), France (0.40%), Germany (0.29%) and Poland (0.23%) contribute marginally to overall imports, reflecting limited penetration in developed markets.

Overall, while exports demonstrate moderate diversification across regions, the import landscape remains heavily concentrated, highlighting a structural imbalance in global trade dynamics. This concentration risk on the import side may expose the trade ecosystem to demand-side volatility originating from a single dominant market.

5. Market Dynamics

5.1 Growth Drivers

The industry continues to expand in response to evolving consumption patterns and broader economic developments. The key growth aspects are as follows:

Market Drivers and Impact Assessment
(All values represent directional impact based on industry estimates and qualitative analysis)

Growth Driver	(1–2 yrs)	(3–4 yrs)	(5–7 yrs)
1. Increasing substitution of refined sugar in food formulations	High	High	High
2. Rising demand for instant premix and ready to eat.	High	High	High
3. Young demographic profile and evolving taste preferences	Moderate	High	High
4. Urbanization and evolving lifestyles	**Moderate**	High	**High**
5. Sustainability and circular economy alignment	Moderate	High	High
6. Product innovation and premiumization	Moderate	Moderate	High
7. Energy Availability Constraints Driving Low-Cooking Food Consumption	High	Moderate	**Moderate**

Source: Infomerics Analytics & Research

Detailed Driver Commentary

1. **Increasing substitution of refined sugar in food formulations**
   Food manufacturers, bakeries, beverage producers and institutional kitchens are increasingly substituting refined sugar with jaggery, Khandsari & instant premix in selected applications to cater to demand for natural sweeteners. Due to its ease of handling and consistency is particularly gaining acceptance as an input in processed foods, snacks and ready-to-mix products.
2. **Rising demand for instant premix and ready-to-eat**
   It reflects a structural shift in eating habits. Consumers are increasingly opting for quick meals and frequent snacking, making processed foods an integral part of daily consumption rather than an occasional choice.
3. **Young demographic profile and evolving taste preferences**
   The processed food industry is accelerating category expansion. A large youth population is more experimental and open to trying global cuisines, innovative formats and diverse flavours, thereby increasing demand for processed food products.
4. **Urbanization and evolving lifestyles**
   These are the most fundamental drivers of the processed food industry in India. As city living becomes more fast-paced and time-constrained, consumers are increasingly moving away from traditional cooking toward convenient food solutions that fit into their daily routines.
5. **Sustainability and circular economy alignment**
   Jaggery, Khandsari and premix sector demonstrates alignment with sustainability principles through utilisation of by-products such as bagasse, molasses and press mud. Captive energy generation, organic fertiliser usage and waste monetisation contribute to lower environmental impact and improve overall economic viability, making this processing attractive in sustainability-focused investment environments.
6. **Product innovation and premiumization**
   These initiatives are helping companies stay competitive and relevant. Continuous introduction of new variants, healthier alternatives and premium offerings is enabling brands to cater to evolving consumer expectations and drive higher value realization.
7. **Energy Availability Constraints Driving Low-Cooking Food Consumption**
   In the short term, constraints in cooking fuel availability have led to increased consumption of ready-to-cook and no-cook food products as households seek energy efficient meal solutions. While the impact of such supply driven factors is expected to moderate over time, increased consumer exposure to convenience foods is likely to support sustained adoption alongside broader lifestyle-driven demand trends.

5.2 Market Restraints

The industry operates within an environment that presents several structural and operational constraints. The key restraints are:

Market Challenges and Impact Assessment
(All values represent directional impact based on industry estimates and qualitative analysis)

Challenge	(1–2 yrs)	(3–4 yrs)	(5–7 yrs)
1. Volatility in Raw Material Prices	High	High	Moderate
2. Rising Input, Packaging & Logistics Costs	High	Moderate	Moderate
3. Regulatory Compliance & Food Safety Norms	High	High	Moderate
4. Managing Diverse Regional Tastes	High	Moderate	Moderate
5. Export related Regulatory & Quality Constraints	Moderate	High	High

Source: Infomerics Analytics & Research

Detailed Overview

1. **Volatility in Raw Material Prices**
   Dependence on agricultural inputs such as sugarcane exposes manufacturers to climate variability, seasonality and commodity price fluctuations, impacting input costs and margin stability.

2. **Rising Input, Packaging & Logistics Costs**
   Inflation in fuel prices, packaging materials and transportation costs can compress margins, particularly in price sensitive segments.

3. **Regulatory Compliance & Food Safety Norms**
   Compliance with FSSAI regulations, labelling standards and traceability requirements increases operational complexity and cost, especially as regulatory standards continue to evolve.

4. **Managing Diverse Regional Tastes**
   India's heterogeneous culinary landscape necessitates continuous localisation of products, which adds complexity to product development and supply-chain management.

5. **Quality Consistency and Shelf-Life Challenges**
   The Jaggery, Khandsari & instant premixes are inherently hygroscopic and sensitive to moisture, making it vulnerable to quality deterioration, microbial spoilage and shorter shelf life if not properly processed and packaged. Ensuring consistent quality across batches requires enhanced processing controls and packaging solutions, increasing operational costs.

6. Government Initiatives and Policy Support

The processed food industry in India has benefited from sustained policy support from the Government of India aimed at strengthening food processing infrastructure, improving supply-chain efficiency, encouraging formalisation and enhancing global competitiveness. These initiatives are as follows:

1. **Production Linked Incentive Scheme for Food Processing Industry (PLISFPI)**
   The Production Linked Incentive Scheme for Food Processing Industry (PLISFPI) was approved by the Union Cabinet in 2021. The duration of the scheme will be six years i.e. 2021-22 to 2026-27. It aims to create global food manufacturing champions and promote Indian processed food brands internationally. The scheme incentivises incremental sales and capacity expansion in segments such as ready-to-cook foods, processed fruits & vegetables, marine products, dairy products and millet-based foods, along with dedicated support for branding and marketing abroad.

2. **Financial and Credit Support Measures**
   A INR 2,000 crore special fund has been created with NABARD to provide affordable credit for food parks, agro-processing units and related infrastructure projects. Food processing and cold chain activities are eligible for priority sector lending, improving access to institutional finance. Tax incentives such as profit-linked deductions under Section 80-IB and investment-linked deductions under Section 35-AD of the Income Tax Act support capital investment in food processing and packaging infrastructure.

3. **Scheme for Creation / Expansion of Food Processing and Preservation Capacities (CEFPPC)**
   This scheme was launched by MOFPI in 2017. It provides financial assistance for setting up, expanding or modernising food processing units, including those engaged in ready-to-eat, ready-to-cook, bakery, snack, dairy, fruit and vegetable processing and other processed food categories. The scheme supports induction of modern technology, improves processing efficiency and enhances shelf life, thereby strengthening the organised processed food ecosystem.

4. **Package Scheme of Incentives (PSI) 2019 – Government of Maharashtra**
   Under the PSI 2019 framework, eligible industrial units engaged in agro and food processing activities are entitled to avail various incentives including Industrial Promotion Subsidy (IPS) linked to reimbursement of State Goods and Services Tax (SGST), interest subsidy, power tariff subsidy, electricity duty exemption, technology upgradation assistance, incentives for cleaner production measures, quality certification support, patent registration subsidy, and incentives relating to energy efficiency, water conservation, water audit and energy audit. The scheme also seeks to strengthen industrial infrastructure and improve ease of doing business by reducing operational costs and encouraging adoption of advanced manufacturing technologies.

7. PESTEL Analysis

The PESTEL framework provides a structured assessment of the external macro environmental factors that influence the industry's operating landscape. It examines the political, economic, social, technological, environmental and legal dimensions that collectively shape industry performance, regulatory evolution and strategic direction. This analysis enables a comprehensive understanding of the opportunities and challenges impacting market stability, investment potential and long-term sectoral growth.

(The rest of the page is intentionally left blank)

Factor	Key Insights and Implications
Political	• Strong policy focus by the Government of India on food processing, value addition and reduction of post-harvest losses. • Supportive government schemes such as PMKSY, PMFME and the Production Linked Incentive Scheme for Food Processing. • Liberalised Foreign Direct Investment (FDI) policy allowing 100% FDI in food processing activities. • Government initiatives aimed at strengthening cold-chain infrastructure and agri logistics. • Sensitivity to changes in agricultural policies, export-import regulations, trade restrictions and geopolitical developments impacting commodity supply chains.
Economic	• Growth linked to overall GDP growth, rising disposable incomes and expansion of the middle-class population. • Increasing consumer spending on processed and branded food products across urban and semi-urban markets. • Exposure to inflationary pressures affecting raw material prices, packaging costs, fuel and logistics expenses. • Interest-rate movements may impact borrowing costs, working capital requirements and expansion plans. • Relatively resilient demand due to the essential nature of food consumption, even during economic slowdowns.
Social	• Nuclear families and increasing female workforce participation driving demand for convenience foods. • Growing preference for ready-to-eat and ready-to-cook products due to time-constrained lifestyles. • Rising awareness of food safety, hygiene and quality encouraging shift from loose to packaged food products. • Diverse regional and cultural food preferences requiring localisation of products and flavours.
Technological	• Advancements in food processing technologies improving shelf life, quality consistency and operational efficiency. • Adoption of automation, mechanisation and process standardisation in manufacturing facilities. • Innovation in packaging materials and formats enhancing product safety and consumer convenience. • Expansion of cold-chain and storage technologies supporting growth of perishable and convenience food categories. • Increasing use of digital tools, ERP systems and data analytics for inventory management, demand forecasting and distribution optimisation. • Growth of e-commerce and quick-commerce platforms supported by digital infrastructure.
Environmental	• Increasing focus on sustainability and environmental responsibility in food processing and packaging. • Regulatory and consumer pressure to reduce plastic usage and adopt recyclable or eco-friendly packaging. • Climate change and erratic weather patterns affecting agricultural output and raw material availability. • Growing emphasis on energy efficiency, water conservation and waste reduction in manufacturing operations. • Environmental compliance expected to become a more significant operational consideration over the long term.
Legal	• Regulation by the Food Safety and Standards Authority of India (FSSAI) governing food safety, hygiene, labelling and quality standards. • Mandatory compliance with packaging and nutritional labelling requirements. • Periodic changes in food safety norms may increase compliance and operating costs. • Export-oriented players subject to additional international food safety, quality and certification regulations. • Regulatory framework enhances consumer trust but increases complexity, particularly for small and mid-sized manufacturers.

8. Technology and the Digital Transformation

The processed food industry in India is undergoing a steady technological and digital transformation. Technology adoption is being observed across the value chain, supported by both private investment and government led infrastructure and digital initiatives. The following points are as follows:

1. **Processing and Manufacturing Technologies**
   Manufacturers are increasingly adopting modern food processing technologies to enhance product consistency, hygiene and shelf life. Automation and mechanisation in activities such as sorting, cooking, drying, blending and packaging have reduced manual intervention and improved throughput. These advancements support large-scale production of ready-to-eat, instant premix, bakery, snack and other processed food products.

2. **Automation and Smart Operations**
   Use of automated machinery and process control systems has improved operational efficiency and reduced production losses. Digital monitoring of equipment and production parameters enables better quality control, preventive maintenance and optimisation of resource utilisation across manufacturing facilities.

3. **Cold Chain and Storage Infrastructure**
   Expansion and modernisation of cold-chain infrastructure, including temperature-controlled storage and refrigerated transportation, have strengthened handling of perishable raw materials and finished products. Technology-enabled temperature monitoring systems help maintain product integrity and reduce post-harvest losses, supporting wider geographic distribution of processed food products.

4. **Digital Supply Chain and Inventory Management**
   Processed food manufacturers are increasingly implementing enterprise resource planning (ERP) systems and digital supply-chain tools to improve procurement planning, production scheduling and inventory management. Data-driven demand forecasting and distributor integration have enhanced supply chain visibility and working capital efficiency.

5. **Food Safety, Quality and Traceability Systems**
   Digital quality-management systems, batch tracking and electronic record keeping have strengthened food safety compliance and traceability. Technology enabled food testing laboratories and quality infrastructure support adherence to domestic and international standards, enhancing consumer confidence and export readiness.

6. **Digital Distribution and Consumer Access**
   Growth of e-commerce and quick-commerce platforms has accelerated digital transformation at the retail level. Digital channels have improved product accessibility, enabled faster last-mile delivery and supported data-based marketing and consumer engagement, particularly in urban markets.

9. Competitive Landscape

The processed food industry in India operates in a competitive market structure, comprising a mix of large integrated manufacturers, regional organised processors.

9.1 Key Competitive Strategies

Participants in the processed food industry adopt a range of competitive strategies to strengthen market presence, improve profitability and respond to evolving consumer preferences. The following factors are as follows:

1. **Brand Building and Portfolio Positioning**
   Companies focus on building strong brand equity to enhance consumer trust, loyalty and recall. Portfolio diversification across product categories, taste profiles and price points enables players to address multiple consumption occasions and consumer segments, thereby expanding market reach and mitigating dependence on single products.

2. **Product Innovation and Diversification**
   Companies in this industry are increasingly focusing on value-added and convenience-based products and fortified products to cater to changing consumer preferences. Powdered and liquid formats are gaining traction due to ease of usage in beverages, bakery, and confectionery applications.

3. **Regional Customisation and Localised Offerings**
   Tailoring products to local cuisines, spice profiles and consumption habits enables deeper penetration in regional markets and strengthens acceptance among local consumers. Regional brands often leverage this strategy to compete effectively with national players.

4. **Focus on Organic and Quality Certifications**
   Companies are increasingly obtaining organic certifications, FSSAI compliance, and international food safety accreditations to enhance consumer trust and improve export competitiveness. Certified organic jaggery products, khandsari and instant premix are witnessing growing demand in premium domestic and international markets.

5. **Pricing and Value-Based Strategies**
   Companies adopt a mix of competitive pricing, value-packs and differentiated pack sizes to cater to varied income segments. Cost optimisation through scale, sourcing efficiencies and process improvements supports sustainable pricing strategies without compromising margins.

6. **Marketing, Promotion and Consumer Engagement**
   Advertising, in-store activations and digital engagement, play an important role in influencing consumer choice. Use of digital platforms and data-driven marketing enables targeted engagement and improved understanding of consumer behaviour, particularly among younger and urban consumers.

7. **Strategic Partnerships and Alliances**
   Strategic alliances, contract manufacturing, co-branding arrangements and distribution partnerships are used to accelerate market entry, expand product portfolios and optimise capital deployment. Collaborations also enable access to technology, regional expertise and established distribution networks.

(The rest of the page is intentionally left blank)

9.2 Barriers to Entry

The processed food industry continues to attract new entrants due to growing demand and evolving consumption patterns, the sector is characterised by several structural, regulatory and operational barriers that influence the ease with which new players can establish and scale their operations. These are as follows:

1. **Regulatory Compliance and Food Safety Requirements**
   Compliance with statutory standards prescribed by regulatory authorities requires investment in quality control systems, food testing, documentation and periodic audits. These requirements increase complexity and cost for new entrants, particularly those lacking prior experience in regulated food manufacturing.

2. **Supply Chain and Raw Material Sourcing**
   Reliable sourcing of agricultural raw materials with consistent quality is critical for processed food manufacturing. New entrants may lack established supplier relationships, procurement systems or backward linkages, exposing them to input price volatility and supply disruptions. Building stable supply chains requires time, scale and operational experience.

3. **Product Development and Technical Capabilities**
   Product formulation, shelf-life stability, taste consistency and packaging suitability require technical expertise and testing. New entrants may encounter challenges in achieving scalable production with consistent quality, particularly in ready-to-eat, ready-to-cook and perishability-sensitive categories.

4. **Regulatory Changes and Compliance Risk**
   Periodic changes in food safety norms, labelling requirements and taxation may increase compliance costs and operational uncertainty. New entrants with limited compliance infrastructure may find it challenging to adapt quickly to evolving regulatory expectations.

9.3 About the Company

Shree Siddhivinayak Greentech Industries Public Limited is a Maharashtra based agro-processing company incorporated in 2022, engaged in the processing of sugarcane into jaggery, jaggery-based products and other allied products. Our Company operates an integrated value chain encompassing farmer centric agricultural sourcing, processing, quality control and distribution. Its product portfolio includes jaggery powder manufactured and sold in bulk catering primarily to wholesale, distributor and institutional customers in the Business-to-Business (B2B) segment, as well as consumer sized packs marketed under the brand “FeelGuddy” through its retail outlet in Pune and online platforms such as Amazon and Meesho in the Business-to-Consumer (B2C) segment. It is also engaged in the manufacture of khandsari sugar, a traditionally processed sugar supplied mainly in bulk to B2B customers. In addition, it manufactures value added jaggery-based pre-mix products, including instant rice kheer, jaggery tea, laddoo, lapsi and coffee pre-mixes, which are sold directly to consumers under the “FeelGuddy” brand. It derives ancillary revenue from the sale of by products such as bagasse, molasses and press mud generated during the manufacturing process and also operates an on-site sugarcane seed nursery supplying quality cane seeds to farmers. Guided by its commitment to sustainability, transparency and innovation. It focuses on fair procurement practices, natural & chemical-free products and responsible agro-processing with the objective of creating long-term value for farmers, consumers and other stakeholders.

Types of Products Offered by our Company













9.4 Key Industry Players

Metric	Dhampure Speciality Sugars Ltd	Dollex Agrotech Ltd	Simbhaoli Sugars Ltd	Shree Renuka Sugars Ltd
Year of Incorporation	1992	2013	2011	1995
Registered Office	Bijnor, Uttar Pradesh	Indore, Madhya Pradesh	Hapur, Uttar Pradesh	Belagavi, Karnataka
Geographical Presence	Primarily North India	Madhya Pradesh	North India	Global presence
Plant Location	Dhampur, Bijnor, Uttar Pradesh	Village Erai, Tehsil Badoni Khurd, Datia, Madhy\ a Pradesh	Simbhaoli, Brijnathpur, Chilwaria (Hapur dist., UP)	Port refineries at Kandla (Gujarat) & Haldia (West Bengal)
Product Portfolio	Organic sugar, jaggery & specialty sugars	Sugar, molasses, bagasse & press mud	Sugar, ethanol, power & spirits	Sugar, ethanol, branded sugar & refining
By Products	Treacle, cane syrup, caramel syrup & sugarcane molasses	Molasses, press mud & bagasse	Bio manure & molasses	Organic manure & molasses
Key brands	Dhampure & Dhampur Green	Direct B2B	Simbhaoli	Madhur

9.5 Financial Performance Analysis

The financial performance analysis of Shree Siddhivinayak Greentech Industries Public Limited outlines its operational and profitability performance over FY 2024, FY 2025 and FY 2026. The Company commenced commercial operations in FY 2023–24, with no revenue recorded in FY 2022–23. Accordingly, FY 2024, FY 2025 and FY 2026 represent the Company's post-commencement operating period, during which key indicators such as total income, EBITDA, and profitability margins reflect its initial operational scale and financial performance.

Figures are in INR lakhs (Except for ratios and Percentages)

Key Indicators		Shree Siddhivinayak Greentech Industries Public Limited		
		FY 2026	FY 2025	FY 2024
Revenue from Operations	In Lakhs	7,526.77	5,856.63	3,627.64
Year on year revenue growth	In %	28.52%	61.44%	-
EBITDA	In Lakhs	2,046.22	1,454.29	861.30
EBITDA Margin	In %	27.19%	24.83%	23.74%
PAT	In Lakhs	1,159.22	549.66	308.13
PAT Margin	In %	15.40%	9.39%s	8.49%
Profit after tax growth	In %	110.90%	78.39%	-
Cash Profit after tax	In Lakhs	1,334.55	708.63	455.92
Operating cash flow	In Lakhs	504.19	1,324.17	(1,778.64)
Trade Receivables days	In Days	0	8	0

Inventory days	In Days	117	147	1
Trade Payable days	In Days	150	256	101
Interest Coverage Ratio	In Times	3.70	1.98	1.88
Net worth	In Lakhs	2,507.01	1,847.78	1,298.13
Debt	In Lakhs	8,995.37	7,275.58	7,645.26
Net fixed asset turnover ratio	In Times	1.24	1.09	0.76
Current Ratio	Times	0.90	0.88	0.87
Debt-Equity Ratio	Times	3.59	3.94	5.89
Return on equity	In %	53.24%	34.94%	47.11%
Return on capital employed	In %	19.76%	17.20%	9.22%
Net Asset Value per equity share	In ₹	51.16	377.10	264.92
Net Asset Value per equity share – Adjusted	In ₹	20.47	15.08	10.60

Source: Audited Financials as provided by the company

Formula Used:

- Year on Year Revenue Growth: (Current Year – Previous Year)/ Previous Year
- EBITDA: Total Operating Income - Operating Expenses (excluding Depreciation & Amortisation, Interest and Taxes)
- EBITDA Margin: (EBITDA/Total Operating Income) *100
- PAT Margin: (Profit after Tax/Total Income) *100
- Profit after tax growth
- Cash Profit after tax
- Trade Receivable Days: Trade Receivable Turnover Ratio/365
- Inventory Days: Inventory Turnover Ratio/365
- Trade Payable Days: Trade Payable Turnover Ratio/365
- Interest Coverage Ratio: EBIT/Interest
- Net Worth: Share Capital + Reserve & Surplus – Intangible Assets -Deferred Tax Assets – Misc Expenditure not written off – Revaluation Reserves
- Current Ratio: Current Assets /Current Liabilities
- Debt- Equity Ratio: Debt/Equity
- Return On Equity: (Net Income/ Shareholder Equity) *100
- Total Capital Employed: Fixed Assets + Intangible Assets +Net Working Capital
- Return on Capital Employed (ROCE): (Earnings before Interest & Taxes/Average Capital Employed) *100
- Net Asset Value per Equity Share: (Total Assets – Total Liabilities- Preference share capital)/ Total Number of Outstanding Equity Share

Shree Siddhivinayak Greentech Industries Public Limited demonstrated strong and consistent financial growth over the period from FY 2024 to FY 2026, supported by expansion in business operations, improving operating efficiencies and enhanced profitability. Revenue from operations increased from INR 3,627.64 lakhs in FY 2024 to INR 5,856.63 lakhs in FY 2025, registering a growth of approximately 61.44%, and further increased by 28.52% to INR 7,526.77 lakhs in FY 2026. EBITDA also witnessed steady growth, increasing from INR 861.30 lakhs in FY 2024 to INR 1,454.29 lakhs in FY 2025 and further to INR 2,046.22 lakhs in FY 2026. Consequently, EBITDA margin improved consistently from 23.74% in FY 2024 to 24.83% in FY 2025 and further to 27.19% in FY 2026, reflecting improved operating leverage, better cost absorption and effective cost management.

The Company's profitability improved significantly during the three-year period. Profit After Tax increased from INR 308.13 lakhs in FY 2024 to INR 549.66 lakhs in FY 2025, representing a growth of approximately 78.39%, and further increased by 110.90% to INR 1,159.22 lakhs in FY 2026. PAT margin also improved consistently from 8.49% in FY 2024 to 9.39% in FY 2025 and further to 15.40% in FY 2026, indicating a significant improvement in earnings quality and overall profitability. Cash Profit after Tax increased from INR 455.92 lakhs in FY 2024 to INR 708.63 lakhs in FY 2025 and further to INR 1,334.55 lakhs in FY 2026. The Company also reported a significant turnaround in operating cash flows, generating positive operating cash flow of INR 1,324.17 lakhs in FY 2025 as against negative operating cash flow of INR (1,778.64) lakhs in FY 2024. Although operating cash flow moderated to INR 606.23 lakhs in FY 2026, it remained positive, reflecting continued cash generation despite relatively higher working capital requirements.

The Company's financial position strengthened over the review period, with net worth increasing steadily from INR 1,298.13 lakhs in FY 2024 to INR 1,847.78 lakhs in FY 2025 and further to INR 2,507.01 lakhs in FY 2026. Total debt declined marginally from INR 7,645.26 lakhs in FY 2024 to INR 7,275.58 lakhs in FY 2025 before increasing to INR 8,899.16 lakhs in FY 2026 to support business expansion. Despite the increase in borrowings during FY 2026, the debt-equity ratio improved consistently from 5.89 times in FY 2024 to 3.94 times in FY 2025

and further to 3.55 times in FY 2026, supported by sustained growth in shareholders' funds. The interest coverage ratio also improved significantly from 1.88 times in FY 2024 to 1.98 times in FY 2025 and further to 3.70 times in FY 2026, indicating stronger debt servicing capability. The current ratio remained below unity throughout the period, improving marginally from 0.87 times in FY 2024 to 0.88 times in FY 2025 and 0.90 times in FY 2026, indicating continued reliance on short-term liabilities for working capital financing. Return ratios strengthened considerably, with Return on Equity improving from 47.11% in FY 2024 to 53.24% in FY 2026, despite a temporary moderation to 34.94% in FY 2025, while Return on Capital Employed increased steadily from 9.22% in FY 2024 to 17.20% in FY 2025 and further to 19.93% in FY 2026, reflecting more efficient utilisation of capital.

The Company's working capital profile exhibited mixed trends during the period. Inventory days increased significantly from 1 day in FY 2024 to 147 days in FY 2025, before improving to 117 days in FY 2026, indicating better inventory management during the latest financial year. Trade payable days increased from 101 days in FY 2024 to 256 days in FY 2025 and subsequently declined to 151 days in FY 2026, suggesting faster settlement of supplier obligations while remaining at a comfortable level. Trade receivable days remained negligible over the period. Additionally, the net fixed asset turnover ratio improved consistently from 0.76 times in FY 2024 to 1.09 times in FY 2025 and further to 1.24 times in FY 2026, reflecting improved utilisation of the Company's fixed asset base to generate revenue.

Overall, the Company demonstrated sustained improvement in operational and financial performance over FY 2024 to FY 2026, driven by robust revenue growth, expanding operating margins and strong profitability. The strengthening of net worth, improvement in return ratios and enhanced interest coverage indicate improving financial resilience. However, the current ratio remaining below unity, the increase in debt during FY 2026 and the moderation in operating cash flows highlight the need for continued focus on liquidity management, working capital optimisation and gradual deleveraging to support long-term sustainable growth.

9.6 Peer Benchmarking – Financial performance analysis for FY 2026

The following table presents a comparison of key financial indicators of Shree Siddhivinayak Greentech Industries Public Limited with Dhampure Speciality Sugars Limited and Dollex Agrotech Limited in the Processed Food Industry.

Figures are in INR lakhs (Except for Margins and Percentages)

Key Indicator	Unit	Shree Siddhivinayak Greentech Industries Public Limited	Dhampure Speciality Sugars Limited	Dollex Agrotech Limited
Revenue from Operations	In Lakhs	7,526.77	5,838.98	22,515.77
Year on year revenue growth	In %	28.52%	46.71%	-5.17%
EBITDA	In Lakhs	2,046.22	712.13	1,703.84
EBITDA Margin	In %	27.19%	12.20%	7.57%
PAT	In Lakhs	1,159.22	554.78	841.61
PAT Margin	In %	15.40%	9.50%	3.74%
Profit after tax growth	In %	110.90%	92.77%	1.63%
Cash Profit after tax	In Lakhs	1,334.55	593.42	1,140.24
Operating cash flow	In Lakhs	504.19	503.19	-674.96
Trade Receivables days	In Days	0	24	104
Inventory days	In Days	117	41	197
Trade Payable days	In Days	150	17	593
Interest Coverage Ratio	In Times	3.70	351.62	3.87
Net worth	In Lakhs	2,507.01	4,243.87	12,397.42
Debt	In Lakhs	8,995.37	3.92	15,738.26
Net fixed asset turnover ratio	In Times	1.24	2.50	8.25
Current Ratio	Times	0.90	3.07	1.69
Debt-Equity Ratio	Times	3.59	0.00	1.27
Return on equity	In %	53.24%	14.49%	8.85%
Return on capital employed	In %	19.76%	17.38%	5.09%
Net Asset Value per equity share	In ₹	51.16	48.61	31.03
Net Asset Value per equity share – Adjusted	In ₹	20.47	48.61	31.03

Source: Audited Financials as provided by the company and publicly available financial data

9.7 Company Positioning

Shree Siddhivinayak Greentech Industries Public Limited is positioned as a vertically integrated agro-processing company operating in the natural sweeteners and value-added traditional foods segment, with a primary focus on jaggery, jaggery powder, khandsari sugar and jaggery-based pre-mix products. The Company operates across the value chain, encompassing farmer-linked procurement, in-house processing, by-product utilisation, branding and multi-channel distribution, allowing it to exercise greater control over quality, traceability and cost structures as compared to conventional jaggery manufacturers.

Within the fragmented jaggery and traditional sweeteners industry, it distinguishes itself through a diversified product and end-use mix, serving both Business-to-Business (B2B) customers such as wholesalers, distributors and institutional buyers, as well as Business-to-Consumer (B2C) customers through branded offerings under its "FeelGuddy" brand. While bulk sales of jaggery powder and khandsari sugar provide scale and steady volumes, it's branded jaggery-based pre-mix portfolio (including instant beverage and dessert mixes) enables participation in the higher-margin convenience food segment aligned with evolving consumer preferences.

The Company's positioning is further strengthened by its farmer-centric and backward-linked operating model. Direct engagement with farmers, supported by an in-house sugarcane seed nursery, enables access to consistent quality raw material while promoting better agronomic practices and long-term sourcing stability. Backward integration is complemented by effective by-product monetisation, wherein bagasse, molasses and press mud generated during processing are utilised or sold, contributing to revenue diversification and operational efficiency.

From a differentiation standpoint, it focuses on natural, minimally processed and chemical-free alternatives to refined sugar, aligning its product philosophy with increasing consumer preference for clean-label and traditional ingredients. Its manufacturing processes emphasise standardisation, hygiene and moisture-controlled packaging, supporting product consistency and shelf life, which are key requirements for institutional buyers and organised retail channels. The "FeelGuddy" brand positions it in the emerging intersection of traditional foods and modern convenience formats, allowing it to extend the relevance of jaggery into contemporary consumption occasions.

Sustainability forms a structural element of the it's positioning. It follows Environmental, Social and Governance (ESG)-oriented practices through renewable energy use from bagasse, waste minimisation, farmer engagement initiatives and responsible manufacturing practices. These initiatives, combined with compliance-oriented governance frameworks, support the Company's objective of building a responsible, scalable and resilient business model, capable of long-term value creation for farmers, customers and other stakeholders.

Overall, the Company is positioned as a reliable supplier of natural sweeteners and value-added jaggery-based products, differentiated by vertical integration, product diversification, farmer linkage, branded retail presence and sustainability-linked operations, rather than competing solely on price or commoditised volume within the traditional jaggery industry.

9.8 Swot Analysis

Strengths (Internal / Competitive Advantages)	Weaknesses (Internal / Limitations)
✔ Integrated agro-processing operations encompassing procurement, processing, quality control and distribution. ✔ Strong farmer centric procurement model promoting fair trade practices and reliable raw material sourcing. ✔ Diversified product portfolio including jaggery powder, khandsari sugar, value-added jaggery-based pre-mix products and ancillary by products. ✔ Established presence in Business-to-Business (B2B) segment. ✔ Focus on natural and chemical free products aligned with increasing consumer preference for healthier sweetener alternatives. ✔ Commitment to sustainability and Environmental, Social and Governance (ESG) principles, supporting long-term value creation.	✘ Dependence on sugarcane availability which is subject to seasonal variations and agricultural risks. ✘ Relatively limited operating history, with incorporation in 2022, which may impact market perception and scalability. ✘ Geographic concentration of operations in Maharashtra, which may expose the Company to regional risks. ✘ Limited brand recognition compared to established players in the broader sugar and sweetener industry.

Opportunities (External / Market Realities)	Threats (External / Sector Challenges)
🌱 Growing domestic and global demand for natural, traditionally processed and chemical free sweeteners. 🌱 Expansion of branded consumer products and value added jaggery-based offerings in the B2C segment. 🌱 Increasing penetration of online distribution channels and organized retail for natural food products. 🌱 Potential to strengthen farmer alliances through expansion of cane nursery operations and sustainable sourcing initiatives. 🌱 Scope for utilization and monetization of by-products to improve operational efficiency and margins.	⚠️ Exposure to fluctuations in sugarcane prices and agricultural input costs. ⚠️ Competition from established sugar manufacturers, alternative sweetener producers and unorganized jaggery processors. ⚠️ Regulatory changes related to agro-processing, food safety, environmental norms and agricultural trade policies. ⚠️ Climate variability & weather-related risks impacting sugarcane yield and quality. ⚠️ Shifts in consumer preferences and price sensitivity affecting demand for premium natural sweetener products.

10. Future Outlook

The Indian processed food industry is expected to grow at a CAGR of 6.59% between 2025 and 2035, reflecting healthy growth and structurally driven expansion supported by health consciousness, urbanisation and rising disposable incomes. Demand growth is expected to be led by natural sweetener's, ready-to-eat and instant premix foods driven by time constrained lifestyles, increasing nuclear households and higher workforce participation, particularly in urban and semi-urban areas. Traditional processed food categories such as jaggery, khandsari sugar (Natural Sweeteners) and regional snacks are expected to retain relevance, supported by strong cultural consumption habits and increasing adoption of branded & hygienically packaged products.

Health-oriented processed foods, including instant jaggery rice kheer, jaggery laddoo, low-sugar and plant-based offerings are expected to witness relatively faster growth as consumer awareness around nutrition and food safety continues to increase. Distribution is likely to evolve further with modern trade, e-commerce and quick-commerce platforms gaining incremental share alongside general trade, improving accessibility and consumption frequency. Government initiatives supporting food processing, cold-chain infrastructure and formalisation of micro food enterprises are expected to continue strengthening the sector's supply-side ecosystem.

While the processed food may be exposed to factors such as input cost volatility, competitive intensity and evolving regulatory and sustainability requirements, these are not expected to materially hinder its growth trajectory. The essential nature of food consumption, supported by India's large domestic market, regional diversity and significant scope for product innovation, continues to underpin stable and resilient demand. Overall, the processed food industry is expected to remain a key growth segment within India's FMCG sector with sustained long-term expansion driven by convenience, affordability and evolving consumer preferences.

(The rest of the page is intentionally left blank)

OUR BUSINESS

Some of the information in the following discussion, including information with respect to our plans and strategies, contain forward-looking statements that involve risks and uncertainties. You should read "Forward Looking Statements" beginning on page no. 21 for a discussion of the risks and uncertainties related to those statements. Our actual results may differ materially from those expressed in or implied by these forward-looking statements. Also read "Risk Factors" and "Management's Discussion and Analysis of Financial Condition and Results of Operations" beginning on page no. 22 and 265 for a discussion of certain factors that may affect our business, financial condition or results of operations. Our financial year ends on March 31 of each year, and references to a particular financial year are to the twelve months ended March 31 of that year. Unless otherwise indicated or the context otherwise requires, in this chapter, references to "Company, "Our Company", "we" or "us" mean Shree Siddhivinayak Greentech Industries Private Limited.

Investors are accordingly cautioned against placing undue reliance on such information in making an investment decision and should consult their own advisors and evaluate such information in the context of the Restated Financial Statements and other information relating to our business and operations included in this Draft Red Herring Prospectus.

BUSINESS OVERVIEW

HISTORY

Our Company was originally incorporated on June 24, 2022 as "Shree Siddhivinayak Greentech Industries Private Limited", a Private Limited Company under the provisions of the Companies Act, 2013, vide Certificate of Incorporation dated June 25, 2022, issued by the Registrar of Companies, Central Processing Centre. Our Company's main objects is to carry on the business of manufacturing and trading of Jaggery and Sugar including all its "by-products" like bagasses, press mud, molasses and ash. Further the main objects of our Company also allow our Company to undertake the manufacturing, trading and cultivation of food products. Our Company filed e-form 20A for submission of declaration of commencement of business on September 16, 2022.

Our company initially started with the manufacturing of Jaggery Powder in the FY 2023-2024. Thereafter, our Company entered the segment of value added food products i.e. Jaggery based Pre-Mixes (Instant Rice Kheer, Jaggery Tea, Jaggery Laddoo, Jaggery Lapsi and Jaggery Coffee premixes) during the FY 2024-2025. Thereafter, our Company started the manufacturing of Khandsari Sugar during FY 2025-2026. Further during the same period our Company also ventured into backward integration of cultivation and sale of Sugarcane Seeds ("Cane Seeds").

Subsequently, our Company was converted from a Private Limited Company to a Public Limited Company pursuant to a special resolution passed by the shareholders at the Extraordinary General Meeting held on January 30, 2026. The name of our Company was consequently changed to "Shree Siddhivinayak Greentech Industries Limited", and a fresh Certificate of Incorporation was issued by the Registrar of Companies, Central Processing Centre, on March 27, 2026.

Thereafter, the MOA of our Company was amended to reflect the insertion of the following new clause to the main objects, vide Special Resolution passed at the Extraordinary General Meeting held June 16, 2026:

To carry on the business of farming, horticulture, tissue culture, biotech, floriculture, sericulture, cultivation of all kinds of food grains, seeds, nursery, fruits, fodders and to carry on the business of plantation of all types of poultry farming, dairy farming dairy products and agricultural plantations.

The same was approved by the Registrar of Companies, Central Processing Centre vide issue of "Certificate of Registration of the Special Resolution confirming Alteration of Object Clause(s)" dated July 02, 2026.

It is to be noted that the aforesaid amendment did not result in any material change in the scope of our Company's existing operations but is intended solely for the purpose of clarity, precision, and better presentation of our Company's objects in its constitutional document.

The Corporate Identification Number of our Company is U10720MH2022PLC385368. The registered office of our Company is situated at Block Number 1 and 4 Floor No-1 and 2 Survey No 120, Plot No 4 & C.T.S. Number-5343 Sambhaji Nagar Behind DIC, Osmanabad, Maharashtra, India, 413501.

The Promoters of our Company are Mr. Dattatray Kashinath Kulkarni and Mrs. Dipali Dattatraya Kulkarni.

BUSINESS

Our Company is engaged in the manufacture of Jaggery Powder & Khandsari Sugar from sugarcane through the crushing and clarification process. Further our Company is also engaged in manufacturing of value-added food products i.e., Jaggery based pre-mixes and our Company also operates nursery for cultivation of Cane Seeds.

Jaggery Powder: Unlike refined white sugar, Jaggery is minimally processed, so it retains some minerals like iron, potassium and calcium. It usually has a golden-brown to dark brown color and a rich, caramel-like flavor. In Indian cuisine, Jaggery (often called gur) is used in both sweet dishes (like desserts) and savory foods, as well as in drinks. It can come in solid blocks, powder or paste form. Our Company manufactures Jaggery in powder form. Our Company operates in the Business-to-Business ("B2B") segment with respect to these products.

Khandsari Sugar: Khandsari Sugar is a traditional, unrefined Indian sugarcane based sugar. Unlike regular white sugar, which is processed and bleached with chemicals like sulphur, Khandsari Sugar is minimally processed. It is usually yellowish in color and has caramel-like flavor. This allows Khandsari Sugar to retain trace minerals (like calcium and iron). Khandsari sugar is known to have a slightly lower glycemic index. Khandsari Sugar is manufactured in crystal form. Khandsari Sugar can be used as replacement to processed white sugar. Our Company operates in the Business-to-Business ("B2B") segment with respect to these products.

By Products: During the course of manufacturing Jaggery Powder and Khandsari Sugar, by-products and residues such as molasses, bagasse, press mud and ash are generated. Our Company operates in the Business-to-Business ("B2B") segment with respect to these products.

Value-Added Food Products:
Our Company is engaged in the manufacturing of Jaggery-based premix products, which are value-added convenience food products prepared using Jaggery Powder as a key ingredient. These products are marketed under our Company's brand Feel Guddy and are sold in consumer packs of 250 grams and 500 grams through our Company's Sales & Outreach Office for Pre-mix Product in Pune and online sales channels, including the Company-managed website, Amazon and Meesho. Accordingly, Our Company operates in the Business-to-Consumer ("B2C") segment with respect to these products.

Nursery:

Our Company has implemented backward integration measures by cultivating sugarcane seed in an on-site nursery (i.e., nursery located on the factory land) to support the availability and quality of sugarcane used in its operations.

- **Ensuring reliable raw material supply:** Sugarcane is a seasonal crop and the quality of the Sugarcane is measured on the basis of the yield of Sugar content in the said crop, which directly impacts the production of Jaggery Powder/ Khandsari Sugar. By cultivating healthy cane seeds and making the same available to the farmers, our Company is trying to implement a mechanism to manage its future sugarcane purchase which will happen in the FY 26-27 and onwards. Wherein the sugarcane which shall be purchased in the upcoming season, will be of higher quality.
- **Commercial sale of seed material:** The nursery also functions as a revenue-generating activity by selling sugarcane seed to farmers as an agricultural input.
- **Extension and ecosystem development:** As a backward integration process, nursery is part of "outgrower support" helping build a more productive and sustainable sugarcane-growing ecosystem. This will also benefit farmers and strengthen our company's relationships with the farmers.

Seasonal Nature of Operations

Our Company's manufacturing operations are seasonal in nature and are undertaken during the sugarcane crushing season. The sugarcane crushing season is the period each year when sugar mills process harvested sugarcane to extract juice and produce Sugar, Jaggery and other byproducts. During this season, farmers harvest mature sugarcane, trucks or carts transport the sugarcane to sugar mills, the mills "crush" the sugarcane using heavy rollers to squeeze out the juice, the juice is then processed into sugar and related products. In India, the crushing season usually starts around October-November and continues till April-May. The exact timing depends on climate, sugarcane variety, rainfall and the geographical location of harvest. Sugarcane begins losing sugar content soon after harvest, so our Company try to process it as quickly as possible. To handle the huge volume of sugarcane arriving from farms, our factory usually operates continuously on 24-hour basis in shifts until the season ends. *For risk associated with respect to seasonal nature of operations kindly refer to Risk Factor No 4 mentioned in Section titled 'Risk Factors' on page no. 26 of this Draft Red Herring Prospectus.*

Zero-Wastage and Energy-Efficient Operations

Our manufacturing facility follows a zero-wastage and zero-discharge approach, whereby the "by-products" generated during the production process is either commercially sold or utilized inhouse. The "by-product" wise details are mentioned hereunder:

Product	Details
Bagasse	• Utilized as fuel in boilers for generation of steam and electricity for captive consumption. • Part of the Baggase is used to make press mud. • Balance is sold for use in steam generation, paper industries or as animal feed.
Molasses	• Molasses is primarily sold for use in ethanol production, distilleries, animal feed and other fermentation-based industrial applications.
Press mud	• Press mud is primarily sold for use in the manufacture of organic fertilizers, compost and other agricultural and bioenergy applications.
Ash	• Ash generated from the combustion of bagasse in boilers is sold for use in fertilizer, construction material and other industrial applications.

Business Segments, Branding and Distribution Channels

Our Company operates across both Business-to-Business ("B2B") and Business-to-Consumer ("B2C") segments. The B2B segment primarily comprises the sale of Jaggery Powder, Khandsari Sugar, Bagasse, Molasses, Press mud, Ash and Cane seeds to wholesale buyers, distributors, industrial users and farmers. The B2C segment comprises the sale of Jaggery Powder in 1 kg / 500 grams consumer packs and Jaggery-based premix products in 250 gram and 500 gram packs, marketed under the brand name "Feel Guddy".

Further our Company also proposes to introduce Khandsari Sugar in 5kg / 1kg / 500 grams consumer packs under the brand name "Simply Sakhar" in the ongoing FY 26-27.

OUR PRODUCT OFFERINGS

Our Company's product offerings are as follow:

a) Jaggery Powder – Our Company sells Jaggery Powder in 30 kg packaging to wholesale buyers, distributors and institutional customers under its Business-to-Business ("B2B") segment. In addition, our Company also sells Jaggery Powder in 1 kg / 500 grams consumer packaging under the brand "Feel Guddy" under its Business-to-Consumer ("B2C") segment via our Company's Sales & Outreach Office for Pre-mix Product in Pune and online channels, including the Company website, Amazon and Meesho.





b) Khandsari Sugar –Our Company sells Khandsari Sugar in 50 kg packaging to wholesale buyers and distributors under its Business-to-Business ("B2B") segment. Our Company also proposes to launch 5kg / 1kg / 500 grams consumer packaging under the brand "Simply Sakhar" for sale under the Business-to-Consumer ("B2C") segment through its Sales & Outreach Office for Pre-mix Product in Pune and online channels, including the Company website, Amazon and Meesho in the ongoing FY 26-27.





c) **Jaggery-based pre-mix products** – Our Company sells Jaggery-based premix products—value-added convenience food items made using Jaggery Powder under the brand "Feel Guddy" in 250 g and 500 g packaging. These products are sold under the B2C segment through our Pune Sales & Outreach Office for Pre-mix Product and online channels, including the Company website, Amazon and Meesho. The product range includes Instant Rice Kheer, Jaggery Tea, Jaggery Laddoo, Jaggery Lapsi and Jaggery Coffee premixes.

Instant Rice Kheer Premix



Instant Jaggery Tea Premix



Instant Jaggery Laddoo Premix



Instant Jaggery Lapsi Premix



Instant Jaggery Coffee Premix



d) **By-products** – During manufacturing of Jaggery Powder and Khandsari Sugar, our Company generates "by-products" such as ***bagasse, molasses, press mud and ash***. Our manufacturing facility follows a zero-wastage and zero-discharge approach, whereby the "by-products" generated during the production process is either commercially sold or utilized inhouse. These by-product sales are conducted in the B2B segment and provide additional revenue streams to our Company's operations. The said "by-products" are sold in loose format via loading the same in the truck or tanks.

e) **Cane Seed Nursery** – Our Company has implemented backward integration measures by cultivating sugarcane seed in an on-site nursery (i.e., nursery located on the factory land) to support the availability and quality of sugarcane used in its operations. Cane seeds are sold directly to farmers at the Nursery.

For risk associated with respect to our product offerings kindly refer to Risk Factor No 1 mentioned in Section titled 'Risk Factors' beginning of page no. 22 of this Draft Red Herring Prospectus.

MAJOR EVENTS AND MILESTONES IN THE HISTORY OF OUR COMPANY

FY 22-23		**Incorporation as a Private Company**
FY 23-24		**Commenced the Operation in the Factory for production of Jaggery powder**
FY 23-24		**Achieved a Turnover of over ₹ 2,500 Lakhs**
FY 24-25		**Company commenced manufacturing Jaggery-based pre-mix products**
FY 24-25		**Achieved a Turnover of over ₹ 5,000 Lakhs**
FY 25-26		**Commenced the Operation in the Factory for production of Khandsari Sugar**
FY 25-26		**Ventured into backward integration of producing Sugarcane Seeds ("Cane Seeds")**
FY 25-26		**Conversion from Private Limited to Public Limited**

(The rest of the page is intentionally left blank)

OUR MANUFACTURING PROCESS FLOW

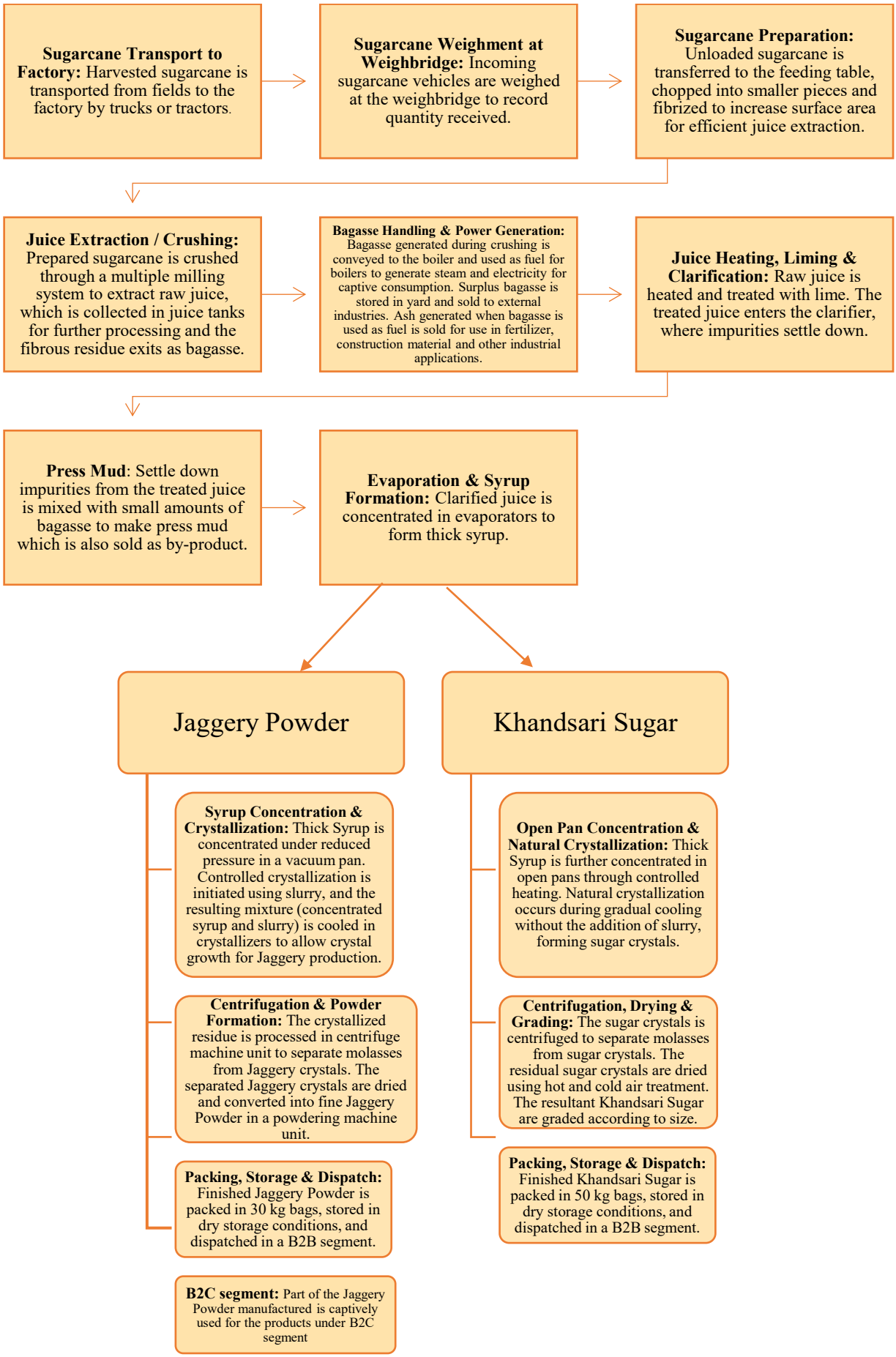

MANUFACTURING FLOW CHART:

COMMON PROCESS FOR JAGGERY POWDER AND KHANDSARI SUGAR

a) SUGARCANE HANDLING & PREPARATION SYSTEM:

Feeder table

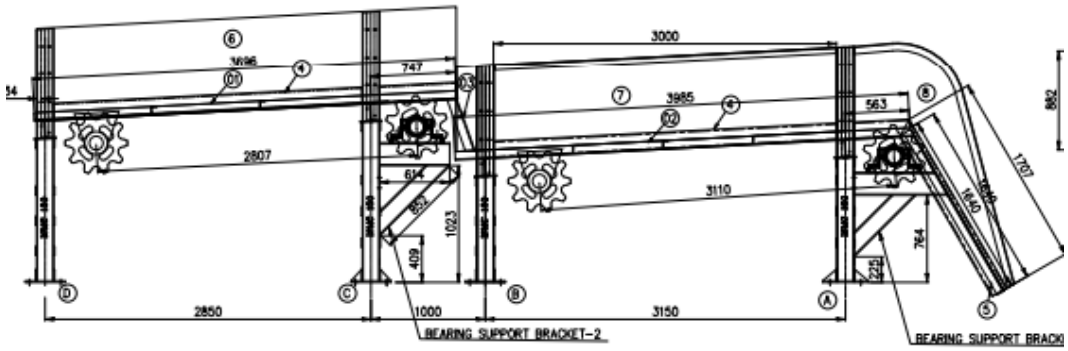

Crane, carrier, cutter, leveler, fibrizer

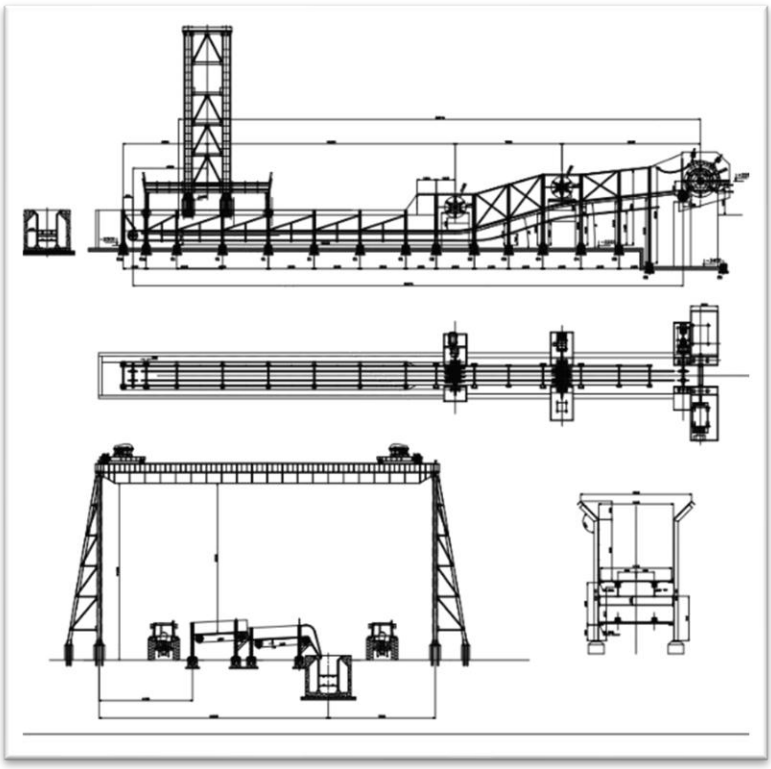

Process & Working: Sugarcane received at the factory is unloaded using hydraulic tipplers or cranes and conveyed via the feeder table to the carrier. It is then chopped into smaller pieces using cutters/choppers and levelled through levellers. Thereafter, the sugarcane is processed through fibrizers, which shred and open the sugarcane fibres into fine form, thereby increasing the surface area for efficient juice extraction in the milling section.

b) JUICE EXTRACTION (MILLING SECTION):

Mills

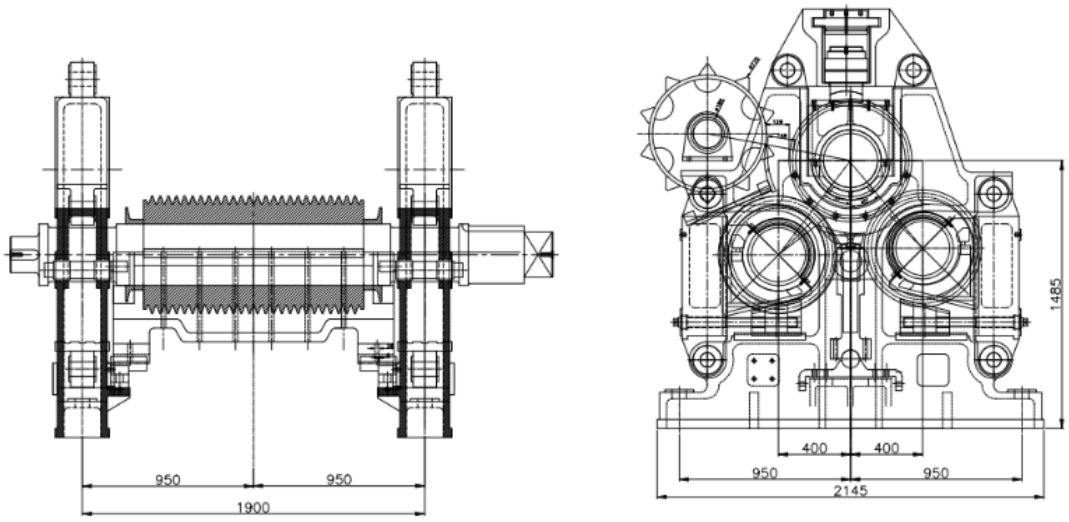

Imbibition water system

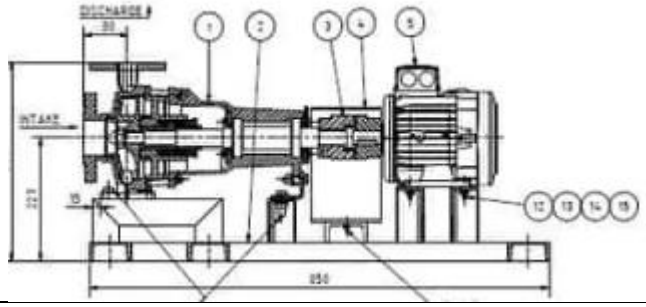

Process & Working: The prepared sugarcane is passed through a series of roller mills where hydraulic pressure is applied on the top rollers to extract juice. Hot imbibition water (approximately 65–75°C), i.e., the addition of hot water between milling stages to wash out residual juice from bagasse, is sprayed at intermediate stages to improve extraction efficiency. The extracted juice is collected as raw juice, while the remaining fibrous residue is discharged as bagasse.

(The rest of the page is intentionally left blank)

c) BAGASSE HANDLING & POWER GENERATION:

Bagasse conveyers/elevator

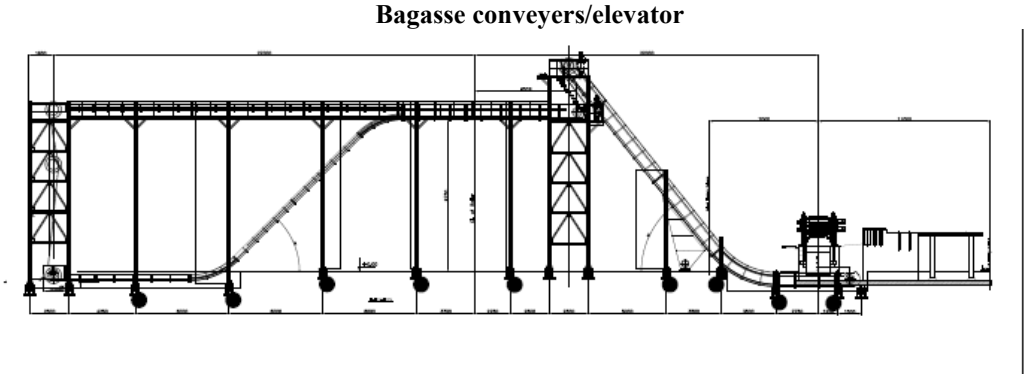

Boiler

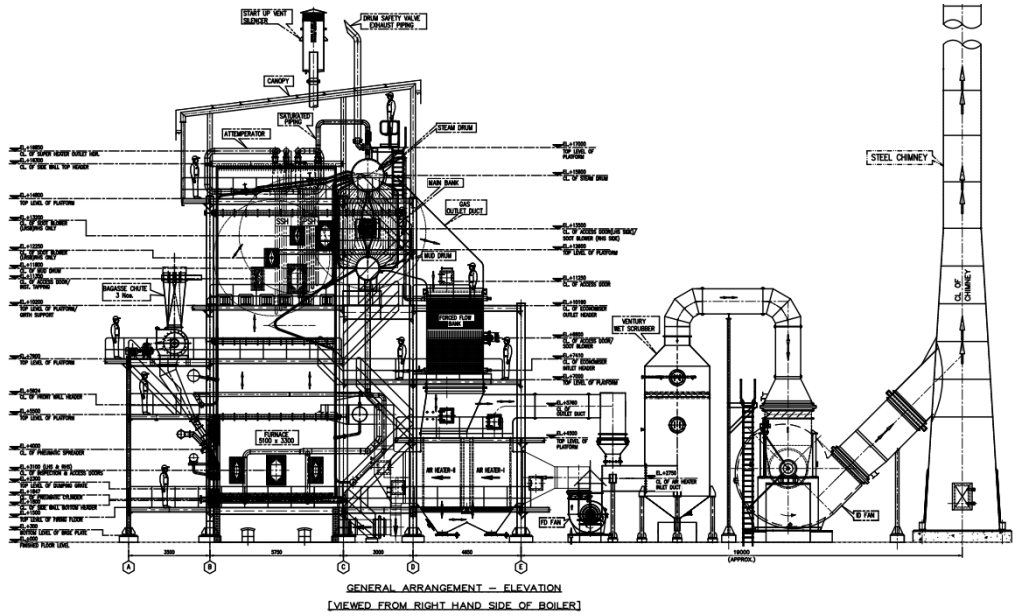

Turbine / power generation unit

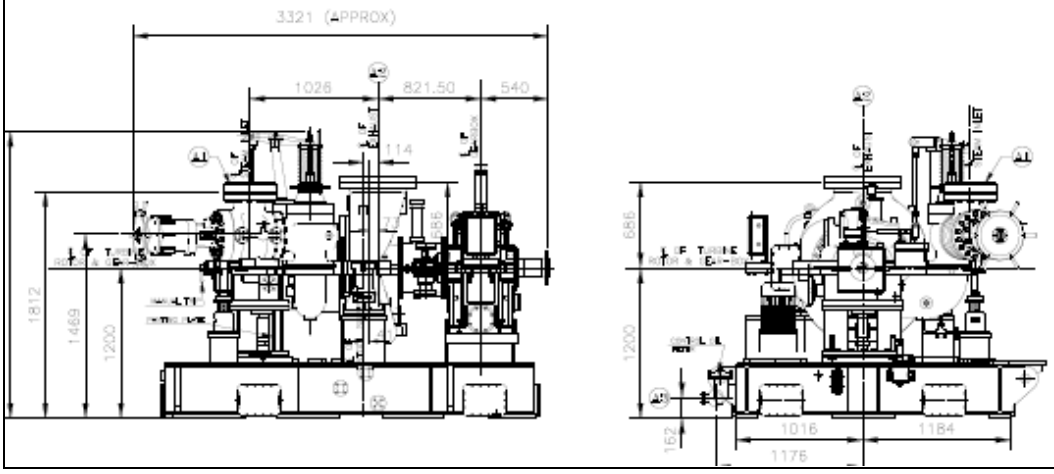

Process & Working: Bagasse from the milling section is conveyed to the boiler house through conveyors/elevators, where it is used as fuel for steam generation. The steam produced is utilised for power generation through turbines. Excess bagasse is stored in the bagasse yard and sold to other industries.

d) JUICE HEATING, LIMING & CLARIFICATION:

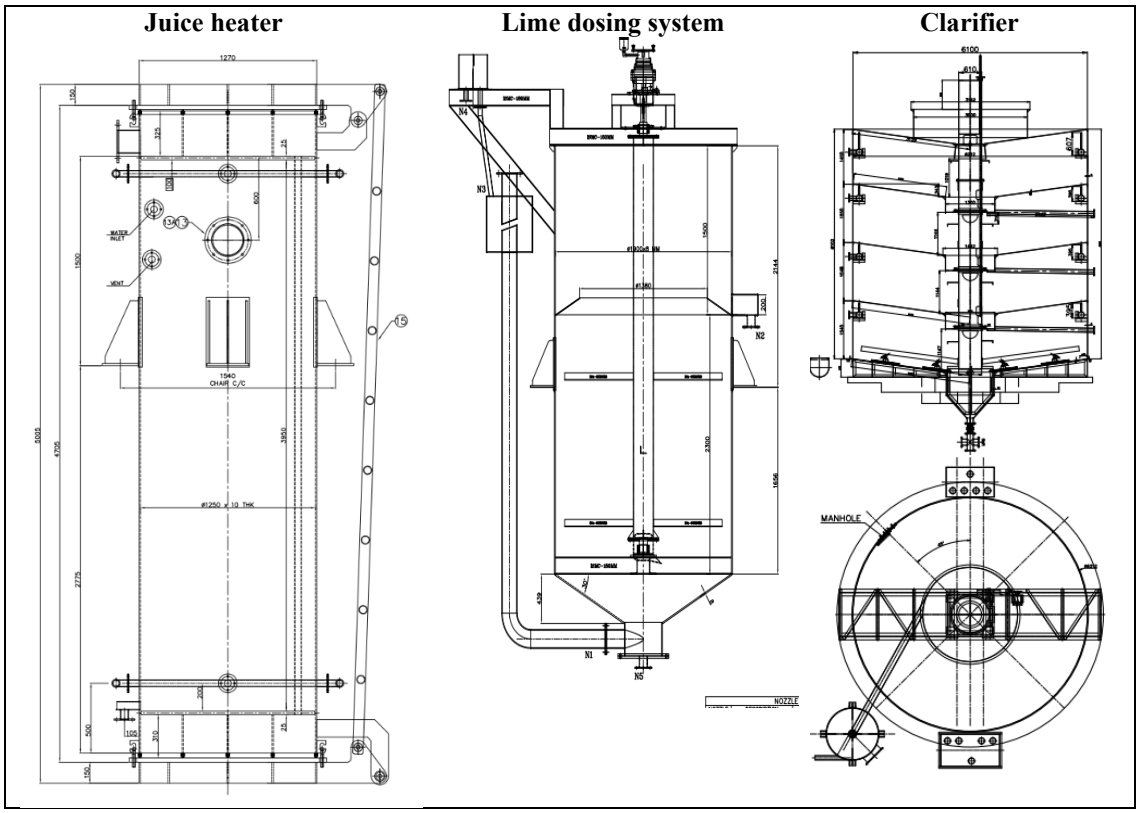

Process & Working: The raw juice is heated and treated with a controlled quantity of lime to adjust pH and facilitate coagulation of impurities. The treated juice is then fed into a clarifier, where impurities settle as press mud. The clarified juice is transferred to the evaporation stage.

e) PRESS MUD HANDLING:

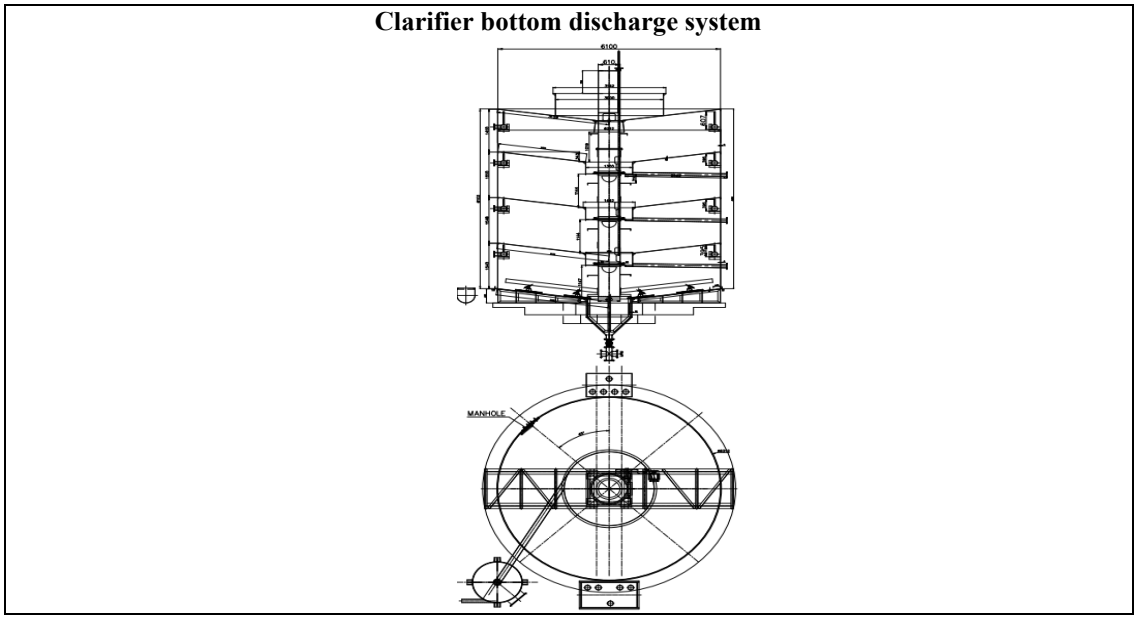

Process & Working: During clarification, settled impurities are removed from the bottom of the clarifier as semi-liquid press mud. The press mud is mixed with bagasse to improve handling and reduce moisture content and is subsequently sold as organic manure.

f) EVAPORATION & SYRUP FORMATION:

Evaporators

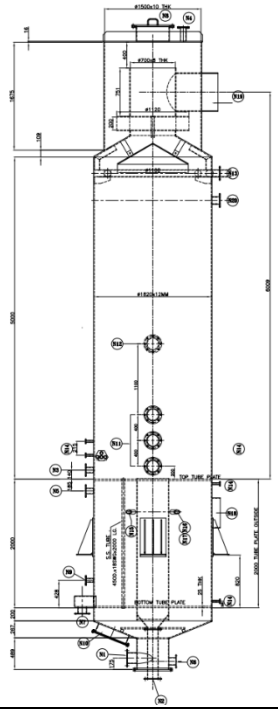

Process & Working: Clarified juice is concentrated in evaporators by controlled boiling. Water is removed and the juice is converted into thick syrup collected in a common supply tank.

It is herewith stated that our manufacturing facility is set up in such a manner that it can produce either Jaggery Powder or Khansari Sugar at any given point in time.

Manufacturing process for Jaggery Powder

a) Vacuum Pan Crystallization

Vacuum pan

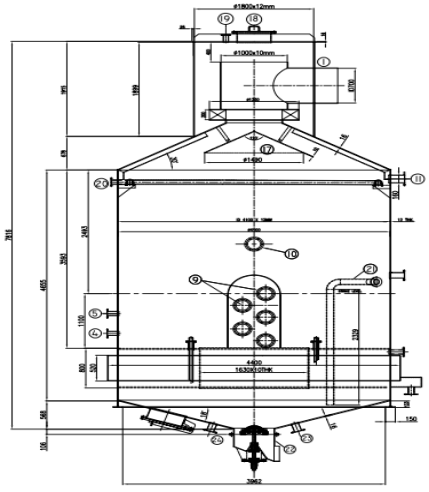

Crystallizer

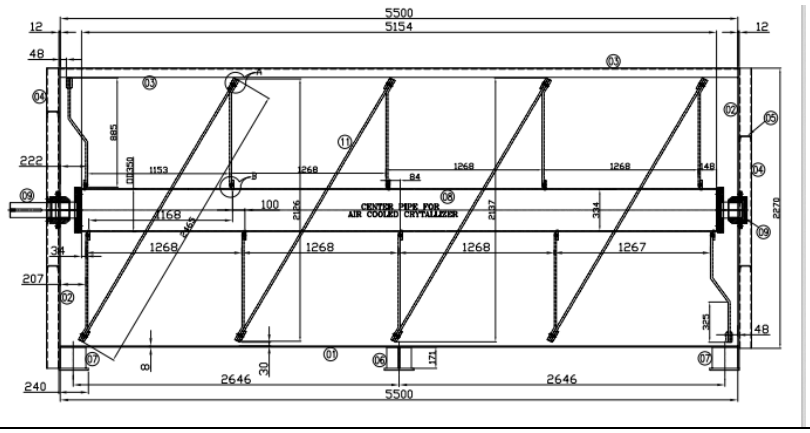

Process & Working: Syrup is concentrated under reduced pressure in a vacuum pan. Sugar crystal slurry is added to initiate controlled crystallization. The mass is gradually cooled in crystallizers to allow crystal growth while maintaining Jaggery characteristics.

b) Centrifugation and Molasses Separation

Centrifuge machine

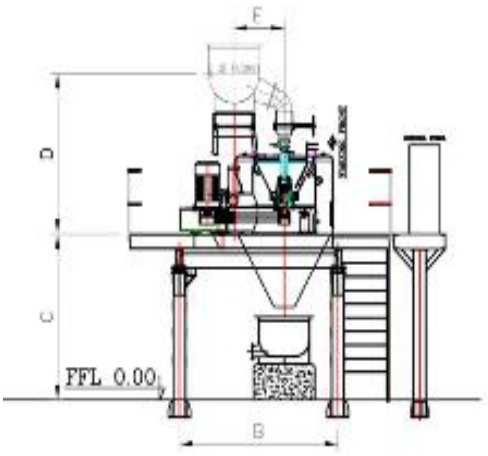

Molasses transfer system

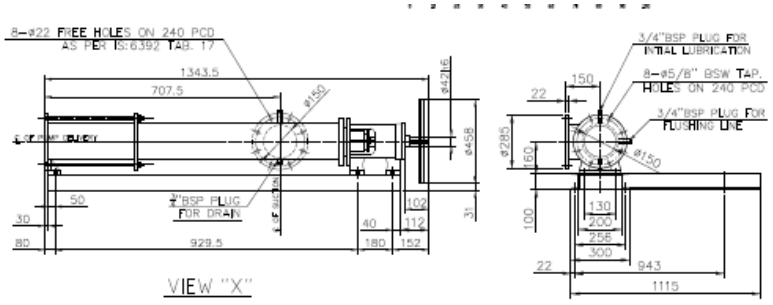

Process & Working: The crystallized mass is transferred to centrifuge machines, where centrifugal force separates: (a) Molasses, which is collected in molasses storage tanks as a by-product and (b) Jaggery crystals, which are sent for further processing.

c) Jaggery Powder Formulation and Packing

Powdering unit

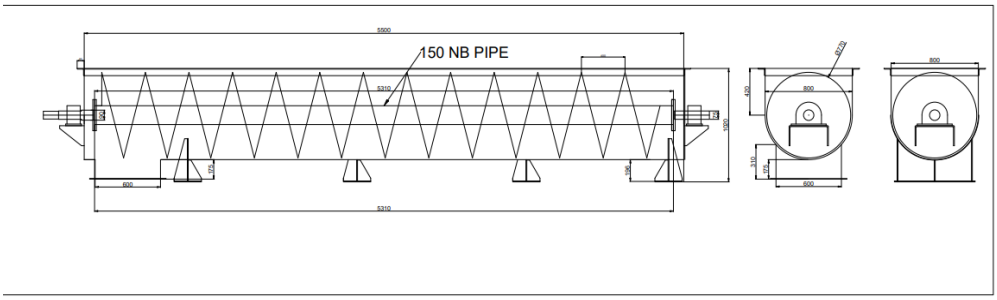

Process & Working: Separated Jaggery crystals are processed into powder form. The finished Jaggery Powder is packed in 30 kg food-grade bags.

d) B2C segment: Part of the Jaggery Powder manufactured is captively used for the products under B2C segment.

Manufacturing process for Khandsari Sugar

a) Open Pan Concentration

Open pan

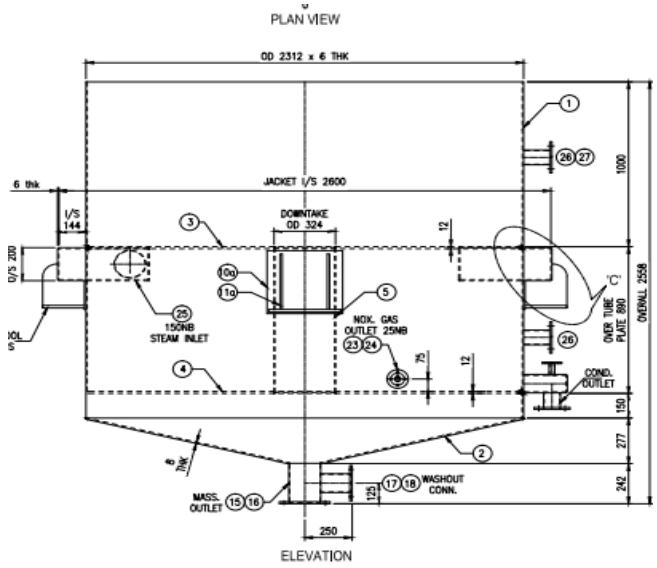

Process & Working: Syrup from the supply tank is further concentrated in open pans through direct heating.

(The rest of the page is intentionally left blank)

b) Natural Crystallization

Crystallizers

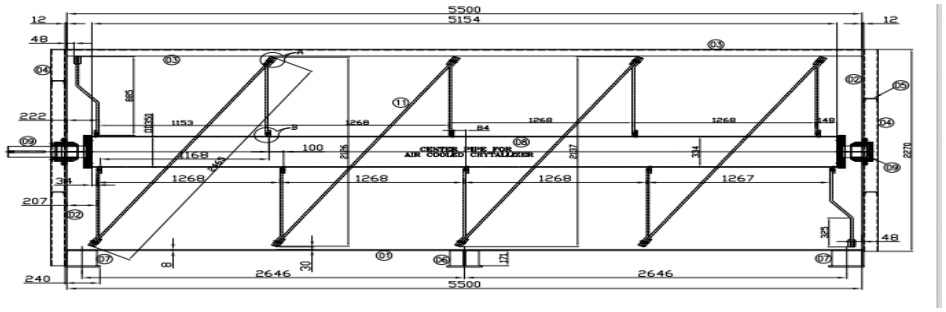

Process & Working: Crystallization is carried out through controlled cooling, without the use of slurry, enabling the natural and gradual formation of sugar crystals.

c) Centrifugation & Molasses Separation

Centrifuge machine

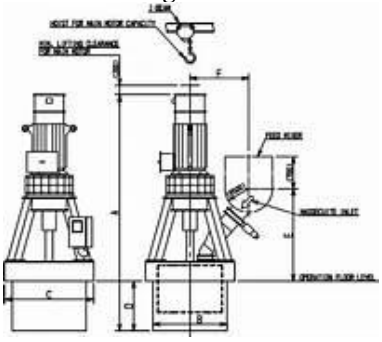

Molasses transfer system

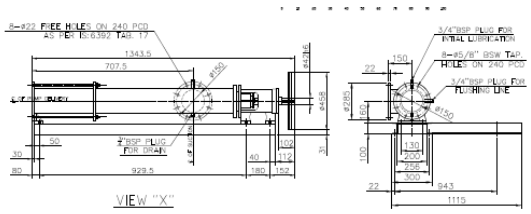

Process & Working: The crystallized mass is fed into centrifuge machines to separate (a) **Molasses**, which is collected and stored as a by-product and (b) **Khandsari Sugar crystals**, which proceed to drying and grading.

d) Drying, Grading & Packing

Hopper system

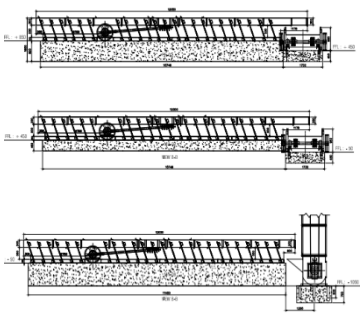

Grading Unit

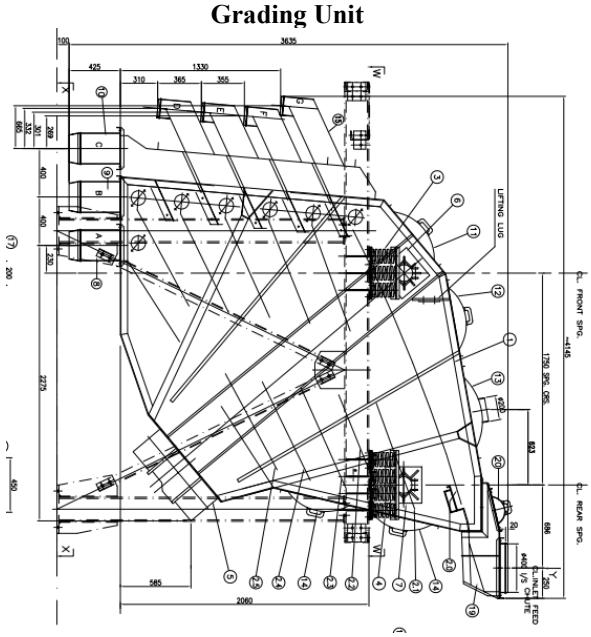

Packing machine

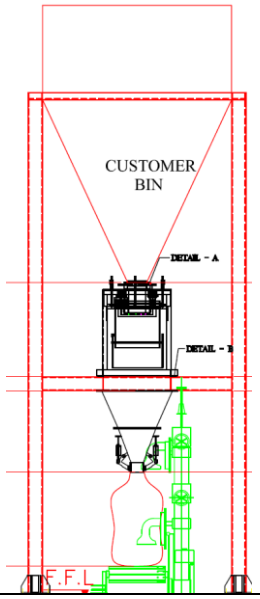

Process & Working: Sugar crystals are dried using hot and cold air treatment, graded by size and packed in 50 kg bags for storage and sale.

CERTAIN FINANCIAL METRICS

Key performance indicators

Key Financial Performance	Unit	March 31, 2026	March 31, 2025	March 31, 2024
Revenue from Operations	In Lakhs	7,526.77	5,856.63	3,627.64
Year on year revenue growth	In %	28.52%	61.44%	-
EBITDA	In Lakhs	2,064.22	1,454.29	861.30
EBITDA Margin	In %	27.19%	24.83%	23.74%
PAT	In Lakhs	1,159.22	549.66	308.13
PAT Margin	In %	15.40%	9.39%	8.49%
Profit after tax growth	In %	110.90%	78.39%	-
Cash Profit after tax	In Lakhs	1,334.55	708.63	455.92
Operating cash flow	In Lakhs	504.19	1,324.17	(1,778.64)

Trade Receivables days	In Days	0	8	0
Inventory days	In Days	117	147	1
Trade Payable days	In Days	150	256	101
Interest Coverage Ratio	In Times	3.70	1.98	1.88
Net worth	In Lakhs	2,507.01	1,847.78	1,298.13
Debt	In Lakhs	8,995.37	7,275.58	7,645.26
Net fixed asset turnover ratio	In Times	1.24	1.09	0.76
Current Ratio	Times	0.90	0.88	0.87
Debt-Equity Ratio	Times	3.59	3.94	5.89
Return on equity	In %	53.24%	34.94%	47.11%
Return on capital employed	In %	19.76%	17.20%	9.22%
Net Asset Value per equity share	In ₹	51.16	377.10	264.92
Net Asset Value per equity share – Adjusted	In ₹	20.47	15.08	10.60

We have described and defined the KPI's as applicable. *For details in relation to the definitions kindly refer to the head titled "Key Performance Indicators" in the chapter titled "Basis of the issue" beginning on page no. 109 of this Draft Red Herring Prospectus.*

SALES MIX AND GEOGRAPHICAL PRESENCE

PRODUCT SALES

Details of the products sold for the last 3 financial years are provided hereunder:

Category	FY 2025-2026		FY 2024-2025		FY 2023-2024	
	₹ in Lakhs	% of total sales of product	₹ in Lakhs	% of total sales of product	₹ in Lakhs	% of total sales of product
Jaggery Powder	6,493.78	86.28	5,079.33	86.73	3,299.58	90.96
Khandsari Sugar	85.21	1.13	NA	NA	NA	NA
By Products*	286.11	3.80	337.65	5.77	328.06	9.04
Jaggery-based pre-mix products	95.33	1.27	439.65	7.51	NA	NA
Cane Seeds	566.34	7.52	NA	NA	NA	NA
Total	**7,526.77**	**100.00**	**5,856.63**	**100.00**	**3,627.64**	**100.00**

*Bifurcation of the by products sold for the last 3 financial years are provided hereunder:

Category	FY 2025-2026		FY 2024-2025		FY 2023-2024	
	₹ in Lakhs	% of total sales of by products	₹ in Lakhs	% of total sales of by products	₹ in Lakhs	% of total sales of by products
Bagasse	132.69	46.38	124.15	36.77	322.47	98.30
Molasses	133.35	46.61	198.12	58.68	0.00	0.00
Pressmud	15.44	5.40	13.51	4.00	5.27	1.61
Ash	4.63	1.62	1.79	0.53	0.32	0.10
Scrap Sale	0.00	0.00	0.09	0.03	0.00	0.00
Total	**286.11**	**100.00**	**337.65**	**100.00**	**328.06**	**100.00**

For risk associated with respect to our product mix kindly refer to Risk Factor No 1 mentioned in Section titled 'Risk Factors' beginning of page no. 22 of this Draft Red Herring Prospectus.

(The rest of the page is intentionally left blank)

GEOGRAPHICAL SALES

a) Geography-wise details of the Jaggery Powder sold for the last 3 financial years are provided hereunder:

State	FY 2025-2026		FY 2024-2025		FY 2023-2024	
	₹ in Lakhs	% of total sale of Jaggery Powder	₹ in Lakhs	% of total sale of Jaggery Powder	₹ in Lakhs	% of total sale of Jaggery Powder
Maharashtra	3780.58	58.22	1561.84	30.75	1323.05	40.10
Madhya Pradesh	2092.97	32.23	2934.34	57.77	1349.51	40.90
Assam	317.30	4.89	0.00	0.00	0.00	0.00
Uttar Pradesh	300.53	4.63	540.36	10.64	0.00	0.00
Kerala	2.40	0.04	0.00	0.00	0.00	0.00
Bihar	0.00	0.00	13.13	0.26	0.00	0.00
Karnataka	0.00	0.00	29.66	0.58	627.02	19.00
Total	**6493.78**	**100.00**	**5079.33**	**100.00**	**3299.58**	**100.00**

b) Geography-wise details of the Khandsari Sugar sold for the last 3 financial years are provided hereunder:

State	FY 2025-2026		FY 2024-2025		FY 2023-2024	
	₹ in Lakhs	% of total sale of Khandsari Sugar	₹ in Lakhs	% of total sale of Khandsari Sugar	₹ in Lakhs	% of total sale of Khandsari Sugar
Maharashtra	85.21	100.00	NA	NA	NA	NA
Total	**85.21**	**100.00**	**NA**	**NA**	**NA**	**NA**

Note: Our Company started the manufacturing of Khandsari Sugar during FY 2025-2026.

c) Geography-wise details of the Jaggery-based pre-mix products sold for the last 3 financial years are provided hereunder:

State	FY 2025-2026		FY 2024-2025		FY 2023-2024	
	₹ in Lakhs	% of total sale of FMCG Jaggery-based pre-mix products	₹ in Lakhs	% of total sale of FMCG Jaggery-based pre-mix products	₹ in Lakhs	% of total sale of FMCG Jaggery-based pre-mix products
Maharashtra	92.89	97.44	439.65	100.00	NA	NA
Kerala	2.44	2.56	0.00	0.00	NA	NA
Total	**95.33**	**100.00**	**439.65**	**100.00**	**NA**	**NA**

Note: It is herewith stated that during the FY 2024-2025, our Company sold Jaggery based pre-mix products to the extent of ₹ 154.28 lakhs to a related party. Further sale of Jaggery based premix products to the tune of ₹ 285.06 lakhs was sold to two parties. Further, during FY 2025-2026, our Company has sold Jaggery based premix products to multiple vendors/distributors/customers. Hence, the volume of sale of Jaggery based premix products during FY 2025-2026 should not be considered as dip in the sales volume.

d) Geography-wise details of the "By Products" sold for the last 3 financial years are provided hereunder:

State	FY 2025-2026		FY 2024-2025		FY 2023-2024	
	₹ in Lakhs	% of total sale of "By Products"	₹ in Lakhs	% of total sale of "By Products"	₹ in Lakhs	% of total sale of "By Products"
Maharashtra	286.11	100.00	337.65	100.00	328.06	100.00
Total	**286.11**	**100.00**	**337.65**	**100.00**	**328.06**	**100.00**

e) Geography-wise details of the Cane Seeds sold for the last 3 financial years are provided hereunder:

State	FY 2025-2026		FY 2024-2025		FY 2023-2024	
	₹ in Lakhs	% of total sale of Cane Seeds	₹ in Lakhs	% of total sale of Cane Seeds	₹ in Lakhs	% of total sale of Cane Seeds
Maharashtra	566.34	100.00	NA	NA	NA	NA
Total	**566.34**	**100.00**	**NA**	**NA**	**NA**	**NA**

Note: Our Company started nursery for Cane seeds during FY 2025-2026.

For risk associated with respect to our geographical sales kindly refer to Risk Factor No 2 mentioned in Section titled 'Risk Factors' beginning of page no.24 of this Draft Red Herring Prospectus.

DETAILS OF TOP TEN CUSTOMERS

a) In respect of Jaggery Powder, top ten customers of our Company for the last 3 financial years are provided hereunder**:**

Category of customers	FY 2025-2026		FY 2024-2025		FY 2023-2024	
	₹ in Lakhs	% of total sale of Jaggery Powder	₹ in Lakhs	% of total sale of Jaggery Powder	₹ in Lakhs	% of total sale of Jaggery Powder
Top 5 Customers	4792.24	73.80	4896.59	96.40	2596.44	78.69
Top 10 Customers	5976.75	92.04	5056.31	99.55	3299.58	100.00

b) In respect of Khandsari Sugar, top ten customers of our Company for the last 3 financial years are provided hereunder**:**

Category of customers	FY 2025-2026		FY 2024-2025		FY 2023-2024	
	₹ in Lakhs	% of total sale of Khandsari Sugar	₹ in Lakhs	% of total sale of Khandsari Sugar	₹ in Lakhs	% of total sale of Khandsari Sugar
Top 5 Customers	85.21	100.00	NA	NA	NA	NA

Note: Our Company started the manufacturing of Khandsari Sugar during FY 2025-2026.

c) In respect of Jaggery-based pre-mix products, top ten customers of our Company for the last 3 financial years are provided hereunder**:**

Category of customers	FY 2025-2026		FY 2024-2025		FY 2023-2024	
	₹ in Lakhs	% of total sale of FMCG Jaggery-based pre-mix products	₹ in Lakhs	% of total sale of FMCG Jaggery-based pre-mix products	₹ in Lakhs	% of total sale of FMCG Jaggery-based pre-mix products
Top 5 Customers	81.05	85.02	439.55	99.98	NA	NA
Top 10 Customers	90.76	95.21	439.65	100.00	NA	NA

d) In respect of By Products, top ten customers of our Company for the last 3 financial years are provided hereunder**:**

Category of customers	FY 2025-2026		FY 2024-2025		FY 2023-2024	
	₹ in Lakhs	% of total sale of By Products	₹ in Lakhs	% of total sale of By Products	₹ in Lakhs	% of total sale of By Products
Top 5 Customers	212.75	74.36	301.41	89.27	297.23	90.60
Top 10 Customers	265.00	92.62	327.74	97.06	325.34	99.17

e) In respect of Cane Seeds, top ten customers of our Company for the last 3 financial years are provided hereunder:

Category of customers	FY 2025-2026		FY 2024-2025		FY 2023-2024	
	₹ in Lakhs	% of total sale of Cane Seeds	₹ in Lakhs	% of total sale of Cane Seeds	₹ in Lakhs	% of total sale of Cane Seeds
Top 5 Customers	41.37	7.30	NA	NA	NA	NA
Top 10 Customers	72.45	12.79	NA	NA	NA	NA

Note: Our Company started nursery for Cane seeds during FY 2025-2026.

Name of the customers are not disclosed due to absence of consents.

For risk associated with respect to our customers kindly refer to Risk Factor No 3 mentioned in Section titled 'Risk Factors' beginning of page no. 25 of this Draft Red Herring Prospectus.

RAW MATERIALS

Our Company's operations rely on primary raw materials i.e. Sugarcane. Raw materials are procured directly from farmers located in the vicinity of our factory location. Sugarcane begins losing sugar content soon after harvest, so our Company try to process it as quickly as possible.

Our Company enters into seasonal agreements with harvesting and transportation contractors, prior to each crushing season, outlining scope, timelines and commercial terms to ensure timely operations and availability of raw materials. Further, the said harvesting and transportation contractors have understandings with groups of farmers wherein the said contractors contribute labour for harvesting of sugarcane crops and also helps the farmers transport the said crop to the factory premises.

Raw Material	FY 2025-2026		FY 2024-2025		FY 2023-2024	
	₹ in Lakhs	% of Revenue from operations	₹ in Lakhs	% of Revenue from operations	₹ in Lakhs	% of Revenue from operations
Sugarcane	3,689.12	49.01	2,671.08	45.61	5,065.12	139.63

For risk associated with respect to our raw materials kindly refer to Risk Factor No 6 mentioned in Section titled 'Risk Factors' beginning of page no. 28of this Draft Red Herring Prospectus.

DETAILS OF TOP TEN SUPPLIERS

Top ten suppliers with respect to Sugarcane, for the last 3 financial years are provided hereunder:

Category of suppliers	FY 2025-2026		FY 2024-2025		FY 2023-2024	
	₹ in Lakhs	% of total purchases	₹ in Lakhs	% of total purchases	₹ in Lakhs	% of total purchases
Top 5 Suppliers	65.49	1.78	53.70	2.01	82.49	1.75
Top 10 Suppliers	111.65	3.03	91.72	3.43	141.68	3.00

Note: Name of the suppliers are not disclosed due to absence of consents.

(The rest of the page is intentionally left blank)

PROCUREMENT PROCESS FOR RAW MATERIALS

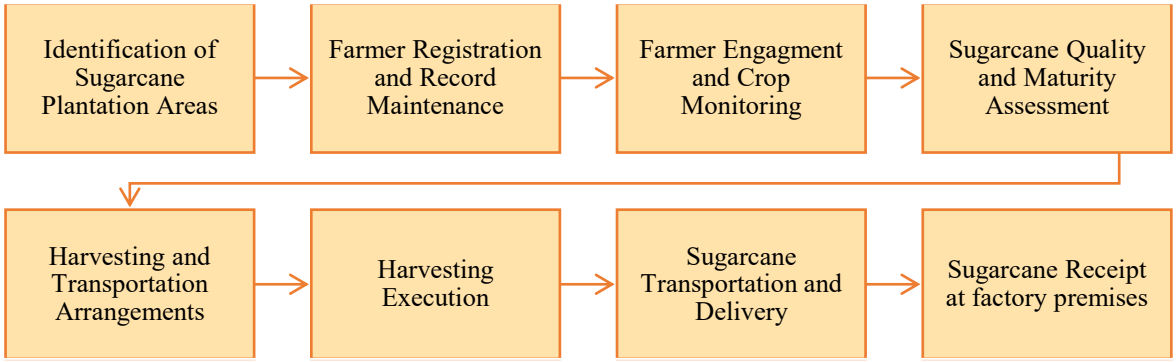

- **Identification of Sugarcane Plantation Areas:** The procurement cycle begins with identification of sugarcane plantation areas within our factory vicinity area through field surveys, covering farmer details, acreage, crop variety and estimated yield.

- **Farmer Registration and Record Maintenance:** Identified farmers are registered in the system. Details such as land records, expected sugarcane quantity and harvesting period are maintained. Farmers who are supplied cane seed from our Company's nursery are also registered in a similar manner for future procurement.

- **Farmer Engagement and Crop Monitoring:** The agriculture department regularly engages with farmers to monitor crop growth and provides guidance on agronomic practices, including irrigation, fertilization and pest management, to support optimal yield.

- **Sugarcane Quality and Maturity Assessment:** Periodic field inspections are conducted to assess crop maturity and quality parameters, such as crop age and brix levels. Based on these assessments, harvesting priorities and crushing schedules are finalized.

- **Harvesting and Transportation Arrangements:** Our Company enters into seasonal agreements with harvesting and transportation contractors prior to each crushing season, outlining scope, timelines and commercial terms to ensure timely operations and availability of resources.

- **Harvesting Execution:** A harvesting schedule is prepared based on sugarcane maturity, factory capacity and contractor availability. Harvesting is carried out under supervision of the agriculture team to ensure quality and adherence to timelines.

- **Sugarcane Transportation and Delivery:** Harvested sugarcane is transported by contractors / farmers to the factory, where it is weighed at the weighbridge and recorded against respective contractor / farmer codes.

- **Sugarcane Receipt at factory premises:** Post weighment, sugarcane is unloaded and made available for crushing in line with production planning, ensuring continuous coordination between procurement, transport and production teams for uninterrupted operations.

The data relating to expenses incurred by our company on procurement of raw material for the last 3 financial years are provided hereunder:

Expense	FY 2025-2026		FY 2024-2025		FY 2023-2024	
	₹ in Lakhs	% of Revenue from operations	₹ in Lakhs	% of Revenue from operations	₹ in Lakhs	% of Revenue from operations
Harvesting and Transportation (H &T) Expense	1,447.76	19.23	867.72	14.82	1,568.45	43.24

For risk associated with respect to Harvesting and Transportation contractors kindly refer to Risk Factor No 7 mentioned in Section titled 'Risk Factors' beginning of page no. 28 of this Draft Red Herring Prospectus.

CONFLICT OF INTEREST WITH SUPPLIERS

There is no conflict between the suppliers of raw materials and third party service providers (crucial for operations of our Company) and our Company, our Promoters, our Promoter Group, our Key Managerial Personnel, our directors, our subsidiaries / our Group Company and its Directors.

OUR COMPETITIVE STRENGTHS

- **Integrated Sugarcane Processing Operations**
  Our Company operates a fully integrated manufacturing facility for Jaggery Powder and Khandsari Sugar, encompassing all stages from sugarcane crushing to juice extraction, clarification, evaporation, crystallisation, centrifugation, drying, grading and packaging under a single setup. This integrated structure enables process control, reduce handling losses, improve operational efficiency and consistent product quality.

- **Backward Integration and Strong Farmer Ecosystem**
  We maintain a structured and integrated relationship with the farming community through farmer registration, crop monitoring and planned procurement scheduling. Further, our on-site cane seed nursery enables supply of quality sugarcane seeds to farmers, supporting improved yield, disease resistance and long-term crop productivity. This integrated ecosystem ensures a reliable and quality raw material supply base.

- **Proximity to Sugarcane Catchment Area and Efficient Procurement**
  Our manufacturing facility is located in a sugarcane-rich region, enabling efficient procurement, reduced transportation time, lower logistics costs and improved sugarcane freshness. Our structured procurement system, supported by farmer engagement and harvesting coordination, ensures timely and uninterrupted supply of raw material during the crushing season.

- **Seasonal Operational Expertise and High Capacity Utilisation**
  We efficiently manage continuous 24-hour operations during the sugarcane crushing season (October/November–March/April), ensuring optimal utilisation of installed capacity. Our coordinated planning across procurement, production and logistics enables smooth seasonal operations and operational efficiency.

- **Zero-Waste and Circular Manufacturing Model**
  We operate a near zero-waste model wherein all major by-products are either utilised internally or monetised externally. Bagasse is used for captive power generation, while molasses, press mud and ash are sold for industrial and agricultural applications. This integrated utilisation enhances resource efficiency and supports sustainable operations.

- **Energy Efficiency through Captive Power Generation**
  Bagasse generated during crushing is used as boiler fuel to produce steam and electricity for captive consumption. This reduces dependency on external power sources, optimises energy costs, enhances energy self-sufficiency and strengthens operational sustainability.

- **Diversified Product Portfolio Across B2B and B2C Segments**
  Our product portfolio includes Jaggery Powder, Khandsari Sugar, Jaggery-based pre-mix products, cane seeds and by-products such as bagasse, molasses, press mud and ash. We operate across both B2B and B2C channels, catering to wholesalers, distributors, industrial users, farmers and retail consumers, thereby diversifying revenue streams and reducing customer concentration risk.

- **Established B2B Distribution Network with By-Product Monetisation**
  We have an established B2B sales network for bulk products, including Jaggery Powder, Khandsari Sugar and by-products such as bagasse, molasses, press mud and ash. Our customer base includes wholesalers, distributors, industrial users, ethanol and cattle feed manufacturers and agricultural users, ensuring stable demand visibility and efficient off-take of production.

- **Emerging B2C Brand Presence and Retail Expansion**
  We have developed the consumer brand “Feel Guddy” for Jaggery Powder and pre-mix products and propose to expand Khandsari Sugar offerings under the brand “Simply Sakhar” in retail packs. This strategic expansion enhances our presence in retail and online channels and enables value addition through branding and direct consumer engagement.

- **Sustainable and Environment-Friendly Operations**
  Our operations are aligned with sustainability principles through efficient utilisation of agricultural residues, biomass-based energy generation and sale of by-products. This reduces environmental footprint and supports responsible manufacturing practices.

- **Quality Control and Process Standardisation**
  We follow controlled and standardised processing parameters across key production stages, ensuring consistency in product quality and improved yield recovery. Our Company also obtains the quality test reports for our products, thus ensuring adherence to defined operational benchmarks.

- **Government Incentive**
  Our Company has obtained subsidies under the Government of Maharashtra's Package Scheme of Incentive, 2019, which supports financial performance.

BUSINESS STRATEGIES:

- **Strengthening Farmer Ecosystem and Supply Chain Integration**
  Our Company continues to strengthen its backward integration through its cane seed nursery and structured farmer engagement initiatives like farmer community building, crop monitoring, harvest planning etc. The aforementioned farmer engagements would enable our company to plan its raw materials procurement in a more efficient and structured way.

- **Expansion of Product Branding and Market Positioning**
  Our Company intends to strengthen brand equity by expanding recognition of "Feel Guddy" and "Simply Sakhar" brands across retail and online channels. Focus will be on consumer awareness initiatives and improved product positioning to transition from commodity-based sales to branded offerings, thereby improving revenue and customer loyalty.

- **Expansion of manufacturing capacity:**
  Our Company during FY 2025-2026 has already entered into the production of Khandsari Sugar by extending the existing manufacturing facility by addition of machinery to manufacture Khandsari Sugar. Further, our Company proposes to undertake the expansion of our manufacturing plant by increasing the sugarcane crushing capacity from 1,250 TCD (Metric Tonnes Crushed per Day) to 2,000 TCD, from the proceeds of the proposed IPO.

MARKETING STRATEGIES:

Our Company's marketing and sales strategy is designed to expand market reach, strengthen customer relationships, enhance brand visibility and support growth across both B2B and B2C segments.

a) B2B Sales and Marketing

Our Company markets Jaggery Powder, Khandsari Sugar, molasses, bagasse, press mud and cane seeds primarily through relationship-driven sales and distribution channels.

- **Leveraging Promoter Network and Industry Relationships**
  Our Company benefits from the business relationships and industry network developed by its Promoters and General Manager, who actively engage with distributors, wholesale buyers, institutional customers and other market participants. These relationships support customer acquisition, market expansion and repeat business generation through direct interactions and word-of-mouth referrals.

- **Sales Team-Led Customer and Distributor Development**
  Our Company's sales team actively engages with potential distributors, traders, wholesalers and institutional buyers to expand the customer base and strengthen market penetration. Through regular interactions, networking activities and relationship management, the sales team supports lead generation, customer retention and business development activities.

b) B2C Sales and Brand Promotion

Our Company markets Jaggery Powder, Jaggery-based pre-mix products and proposed Khandsari Sugar under its consumer brands "Feel Guddy" and "Simply Sakhar" respectively through digital and retail channels.

- **Digital Marketing and Social Media Promotion**
  Our Company has engaged a professional marketing agency to manage digital promotions and social media activities for products marketed under the "Feel Guddy" and "Simply Sakhar" brand. Marketing activities include display advertisements, social media campaigns, promotional posts, reels and product visibility initiatives. These initiatives are aimed at increasing consumer awareness, enhancing brand visibility and supporting online sales growth.

- **Presence on E-Commerce Platforms**
  Our Company markets its consumer products through online sales channels and third-party e-commerce platforms such as Amazon and Meesho. Our Company also seeks to strengthen direct-to-consumer engagement through its own digital presence and online sales initiatives. Further our Company may also expand its online presence via other e-commerce platforms.

For risk associated with respect to our marketing strategies kindly refer to Risk Factor No 40 mentioned in Section titled 'Risk Factors' beginning of page no. 47 of this Draft Red Herring Prospectus.

SWOT ANALYSIS

Strengths	**Weaknesses**
• Integrated agro-processing operations encompassing procurement, processing, quality control and distribution. • Strong farmer centric procurement model promoting fair trade practices and reliable raw material sourcing. • Through farmer engagement, crop monitoring, and quality seed support, we ensure sustainable sugarcane cultivation and improved yields. This integrated approach secures a reliable supply of high-quality raw material. • Diversified product portfolio including Jaggery Powder, Khandsari Sugar, value-added Jaggery-based pre-mix products and ancillary by products. • Established presence in Business-to-Business (B2B) segment. • Focus on natural and chemical free products aligned with increasing consumer preference for healthier sweetener alternatives. • Commitment to sustainability and Environmental, Social and Governance (ESG) principles, supporting long-term value creation.	• Dependence on sugarcane availability which is subject to seasonal variations and agricultural risks. • Relatively limited operating history, with incorporation in 2022, which may impact market perception and scalability. • Geographic concentration of operations in Maharashtra, which may expose our Company to regional risks. • Limited brand recognition compared to established players in the broader sugar and sweetener industry.
Opportunities	**Threats**
• Growing domestic and global demand for natural, traditionally processed and chemical free sweeteners. • Expansion of branded consumer products and value added Jaggery-based offerings in the B2C segment. • Increasing penetration of online distribution channels and organized retail for natural food products. • Potential to strengthen farmer alliances through expansion of cane nursery operations and sustainable sourcing initiatives. • Scope for utilization and monetization of by-products to improve operational efficiency and margins.	• Exposure to fluctuations in sugarcane prices and agricultural input costs. • Competition from established sugar manufacturers, alternative sweetener producers and unorganized Jaggery processors. • Regulatory changes related to agro-processing, food safety, environmental norms and agricultural trade policies. • Climate variability & weather-related risks impacting sugarcane yield and quality. • Shifts in consumer preferences and price sensitivity affecting demand for premium natural sweetener products.

COLLABORATIONS

As on the date of the Draft Red Herring Prospectus, Our Company has not entered into collaborations with any other entity.

FACILITY

Details of the manufacturing facility of our Company is as under:

Sr. No.	Location	Purpose Used	Area	Capacity
1	Gat No-912, Khamaswadi, Kallam, Osmanabad, Maharashtra, 413507	Factory	36,000 sq.mts	Sugarcane crushing capacity: 1,250 TCD
2	Gat No-911, Khamaswadi, Kallam, Osmanabad, Maharashtra, 413507	Godown	15,100 sq. mts	12,000 MT
3	Godown No. 01, Ground Floor, M Pawar Wearhouse, Plot Number 01 & Block Number A-29, Main Road, Diksal MIDC, Diksal, Kalanb, Dharashiv 413507	Godown	1,340.64 sq.mts	2,300 MT

For risk associated with respect to our Manufacturing Facility kindly refer to Risk Factor No 22 mentioned in Section titled 'Risk Factors' beginning of page no. 40 of this Draft Red Herring Prospectus.

IMAGES OF OUR FACTORY





.














मिल नं.1
मिल नं.2
श्री स्वामी समर्थ











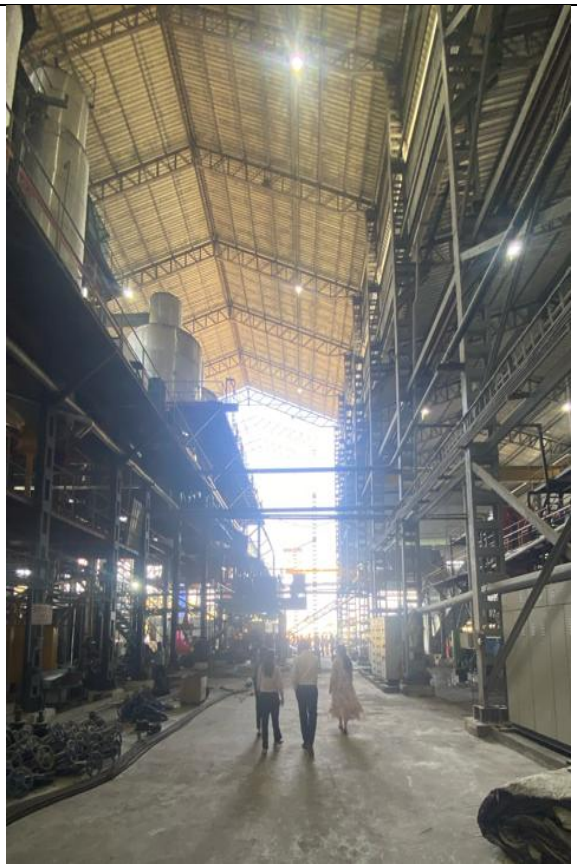

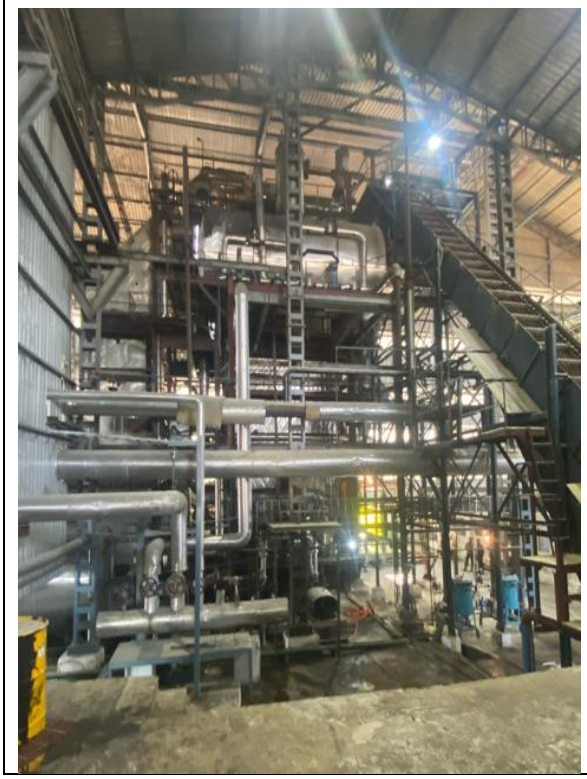



(The rest of the page is intentionally left blank)

CAPACITY AND CAPACITY UTILIZATION

I. Capacity Utilization for the Factory Unit producing (a) Jaggery Powder (b) Khandsari Sugar:

(in MT)

Particulars	FY 2023-24			FY 2024-25			FY 2025-26		
	Installed Capacity	Utilised Capacity	Utilised %	Installed Capacity	Utilised Capacity	Utilised %	Installed Capacity	Utilised Capacity	Utilised %
Crushing Capacity	1,82,500.00	1,69,326.63	92.78	1,27,500.00	1,06,893.44	83.84	1,50,000.00	1,40,298.62	93.53
Jaggery Powder	29,200.00	23,701.00	81.17	20,400.00	17,778.93	87.15	24,000.00	22,582.64	94.09
Khandsari Sugar	NA	NA	NA	NA	NA	NA	7,722.00	620.00	08.03

Note:

1. The Company has installed Sugarcane Crushing Capacity of 1,250 MT per Day

2. The Company has operated its Factory for below mentioned no of days each Financial Year:

FY	Period		No. of Days Operational
FY 2023-2024	15-10-2023	09-03-2024	146
FY 2024-2025	03-11-2024	13-02-2025	102
FY 2025-2026	03-11-2025	03-03-2026	120

3. The above-mentioned Crushing Capacity has been calculated as under

FY	Installed Capacity per Day	No. of Days of operation	Installed Crushing Capacity for that FY
FY 2023-2024	1,250	146	1,82,500.00
FY 2024-2025	1,250	102	1,27,500.00
FY 2025-2026	1,250	120	1,50,000.00

4. The above-mentioned Jaggery Powder Capacity is calculated as follow:
   a. Approved Crushing Capacity for production of Jaggery Powder is 1500 MT per day.
   b. The installed Crushing Capacity of the Company is 1,250 MT per day.
   c. The conversion ratio between Sugarcane and Jaggery Powder is considered to be 16%.
   [Example: 100 MT of Sugarcane if crushed, shall produce 16 MT of Jaggery Powder]
   d. Formula use: [Installed Crushing Capacity] x [No of days of operations] x [conversion ratio]

5. The above-mentioned Khandsari Sugar Capacity is calculated as follows;
   a. Approved Crushing Capacity for production of Khandsari Sugar is 900 MT per day.
   b. The installed Crushing Capacity of the Company is 1,250 MT per day.
   c. The conversion ratio between Sugarcane and Khandsari Sugar is considered to be 11%.
   [Example: 100 MT of Sugarcane if crushed, shall produce 11 MT of Khandsari Sugar]
   d. Formula use: [Approved Crushing Capacity] x [No of days of operations] x [conversion ratio]
   ***e. Note:** The Company commenced its Khandsari Sugar Manufacturing w.e.f., December 16, 2025 and the operation continued till March 03, 2026. Thus the No. of days for which the Company operated its Khandsari Sugar Manufacturing Facility was for 78 Days.*

II. Capacity Utilization for the Machinery producing Premix:

(in Kg)

Particulars	FY 2023-24			FY 2024-25			FY 2025-26		
	Installed Capacity	Utilised Capacity	Utilised %	Installed Capacity	Utilised Capacity	Utilised %	Installed Capacity	Utilised Capacity	Utilised %
Pre-Mix	NA	NA	NA	6,900.00	552.31	08.00	3,000.00	8,101.00	27.00

Note:

1. The Company has installed machinery to produce Pre-Mix to a capacity of 100 Kg per Day
2. The Installed capacity for the FY 2024-25 is calculated based on the production start date 21st January 2025.
3. The Installed capacity is calculated assuming the Company operates the said unit for 300 days in year

(For the above *details relating to installed machinery we have relied upon the certificate dated July 8, 2026 issued by Ajay P. Kothari)*

For risk associated with respect to "our capacity and capacity utilization" and "seasonal nature of operations" kindly refer to Risk Factor No 21, 4 & 5 mentioned in Section titled 'Risk Factors' beginning of page no. 39, 26 and 27 of this Draft Red Herring Prospectus.

PROPERTY

We own and take on rent certain properties for our operations. The brief details of all the properties owned/rented by our Company are set out below:

Sr. No.	Details of the Property	Rights/Period	Owned/ Leased (whether a related party or not)	Contracting party related or not	Purpose Used	Area	Consideration / Lease Rental / License Fees without GST(₹)
1.A	Gat No-912, Khamaswadi, Kallam, Osmanabad, Maharashtra, 413507	Lease period: 20 Years 01-08-2022 to 31-07-2042	Lessor: Dattatraya Kashinathrao Kulkarni	Related	Factory	19,247 sq.mts	Rent: 50,000 per month Monthly rent to be increased by 10% every three years
1.B	Gat No-912, Moha Road Khamaswadi, Kalanb, Dharashiv, Maharashtra, 413507	Lease period: 60 Months 01-06-2026 to 31-05-2031	Lessor: Dattatraya Kashinathrao Kulkarni	Related		16,753 sq.mts	Rent: 1,00,000 per month
2	Gat No-911, Khamaswadi, Kallam, Osmanabad, Maharashtra, 413507	Lease period: 10 Years 14-11-2024 to 13-11-2034	Lessor: Dattatraya Kashinathrao Kulkarni	Related	Godown	15,100 sq. mts	Rent: 2,50,000/- per month
3	Godown No. 01, Ground Floor, M Pawar Wearhouse, Plot Number 01 & Block Number A-29, Main Road, Diksal MIDC, Diksal, Kalanb, Dharashiv 413507	Lease period: 12 Months 21-06-2026 to 20-06-2027	Lessor: M/s M Pawar Warehouse	Not Related	Godown	1,340.64 sq.mts	Rent: 60,000/- per month
4	Block Number 1 and 4, First Floor and Second Floor, Survey No 120, Plot No 4 & C.T.S. Number :5343, Sambhaji Nagar behind DIC, Osmanabad, Maharashtra, 413501	Lease period: 60 Months 01-10-2025 to 30-09-2030	Lessor: Mrs Padwal Vidya Manoj	Not Related	Registered Office	5166.68 sq. ft	Rent: 16,537 per month
5	Office No. 302, 3rd Floor, Padmja Apartment, Survey Number :45+46/3, Tanna Tower, Above Styles SPA Furniture, Erandavana, Pune - 411004	Lease period: 36 Months 01-03-2026 to 28-02-2029	Lessor: Mrs Aruna Balasaheb Patil	Not Related	Sales & Outreach Office for Pre-mix Product	1,000.00 sq. ft	First Year Rent: 85,000 per month; Second Year Rent: 89,250 per month; Third Year Rent: 93,700 per month
6	Flat No. 103, Sneh Sankul, Survey No. 162/1, Plot No. 10, Municipal House No. 26/2042/2, and City Survey No. 9336 Dharashiv, Osmanabad, 413501	Date of purchase: 14-03-2024	Seller: Smt. Samruddhi Sachin Maniyar	Not Related	Guest House / Investment	787.92 sq. ft	13,50,000/-

The above-mentioned property agreements relating to all properties are registered.

For risk associated with respect to our property kindly refer to Risk Factor No 20 mentioned in Section titled 'Risk Factors' on page no. 38 of this Draft Red Herring Prospectus.

HUMAN RESOURCES

At our Company, we value our work force which is a critical factor for our Company's stability and growth. As of March 31, 2026, we had 155 permanent employees. We train our employees on a regular basis to increase the level of operational excellence, improve productivity and maintain compliance standards on quality and safety.

The following table sets forth a breakdown of our employees by department:

Sr. No	Department	Number of Employees
1.	Production	26
2.	Engineering	55
3.	Agriculture	15
4.	Administration	17
5.	Civil	2
6.	Security	26
7.	Account	8
8.	Sugarcane Yard	1
9.	Sales	5
	Total	**155**

Details of registration of employees under Employee' Provident Fund on March 31, 2026:

Particulars	No. of employees registered	Contribution for FY 2026 *(₹ in Lakhs)*
Employee' Provident Fund ('EPF')	107	21.01
Non PF employees	48	-

Details of registration of employees under Employees' State Insurance Corporation as on March 31, 2026:

Particulars	No. of employees registered	Contribution for FY 2026 *(₹ in Lakhs)*
Employees' State Insurance Corporation('ESIC')	30	0.05
Non ESIC	125	-

Employee benefit expenses as a % of the revenue is provided herein below:

(₹ in lakhs)

Name of the Product	FY 2025-2026	FY 2024-2025	FY 2023-2024
Employee benefit expenses	463.55	389.08	294.03
Employee benefit expenses as a % of the revenue from operations	6.16%	6.64%	8.11%

ATTRITION OF SKILLED EMPLOYEES

Particulars	FY 2025-2026	FY 2024-2025	FY 2023-2024
Attrition rate	65.59%	74.50%	18.65%

ATTRITION OF UNSKILLED EMPLOYEES

The unskilled employees of our company are wage workers and work on a contractual basis. Thus, the calculation of attrition rate for the unskilled employees is not applicable.

For risk associated with respect to our human resource kindly refer to Risk Factor No 38 mentioned in Section titled 'Risk Factors' beginning of page no. 46 of this Draft Red Herring Prospectus.

TRAINING PROTOCOL

As part of its focus on operational efficiency, product quality and workplace safety, our Company conducts periodic training programs for employees involved in manufacturing, boiler operations, material handling and maintenance activities. These programs cover sugarcane crushing, juice clarification, Jaggery Powder and Khandsari Sugar manufacturing processes, boiler and captive power operations, by-product handling, hygiene and sanitation practices, safety procedures and preventive maintenance practices.

The training initiatives are aimed at enhancing technical capabilities, improving operational efficiency and safety standards and promoting effective utilisation of resources across the manufacturing operations.

UTILITIES AND INFRASTRUCTURE FACILITIES

Registered Office and Factory

Our Registered Office is situated at Block Number 1 and 4, Floor No. 1 and 2, Survey No. 120, Plot No. 4 & C.T.S. No. 5343, Sambhaji Nagar, Behind DIC, Osmanabad, Maharashtra – 413501, India. Our manufacturing facility is situated at Gat No. 912, Moha Road, Kalamb, Khamaswadi, Dharashiv – 413507, Maharashtra, India.

The Registered Office and manufacturing facility are equipped with the necessary infrastructure and utilities required for carrying on our business operations. Our manufacturing facility is equipped with machinery and equipment required for the production of Jaggery Powder, Khandsari Sugar, Jaggery-based pre-mix products and related by-products. The facilities are also supported by computer systems, internet connectivity, communication systems, storage arrangements, security systems and other supporting infrastructure necessary for efficient business operations.

Power and Electricity

1) **Registered Office**
   The power and electricity requirements of our Registered Office are met through supply arrangements with Maharashtra State Electricity Distribution Company Limited ("MSEDCL").
2) **Manufacturing Facility**
   Our manufacturing facility follows an integrated and energy-efficient operational model wherein bagasse generated during the manufacturing process is utilized as fuel for captive power generation. The major power requirements during the sugarcane crushing season are met through bagasse-based captive co-generation facilities installed at the manufacturing unit. Our Company has an installed captive power generation capacity of approximately 2.5 MW.
   For additional power requirements and during the non-crushing season, electricity supply is sourced from Maharashtra State Electricity Distribution Company Limited ("MSEDCL").

Water

1) **Registered Office**
   Water requirements at the Registered Office are met through ground water sources.
2) **Manufacturing Facility**
   Water requirements at the manufacturing facility for industrial purposes are met through groundwater sources

COMPETITION

Our Company operates in the sugarcane processing industry, where we face competition from both organized players and regional manufacturers engaged in the production of Jaggery, Sugar and other sugarcane-based products. The primary competition arises from Jaggery manufacturers and sugar manufacturers operating in local and regional markets. Our products, Jaggery Powder, Khandsari Sugar and pre-mixes are sold in competitive and price-sensitive markets, where factors such as product quality, pricing, customer engagement / relationships, play an important role in maintaining market position. Additionally, our Jaggery-based pre-mix products also face competition from branded and unorganized food product manufacturers operating in the convenience food segment.

For details of the competitors, kindly refer to the head title "Competitive Landscape" under the Chapter titled "Industry Overview" on page number 139 of the Draft Red Herring Prospectus.

For risk associated with respect to our competition kindly refer to Risk Factor No 40 mentioned in Section titled 'Risk Factors' beginning of page no. 47 of this Draft Red Herring Prospectus.

TECHNOLOGY, AUTOMATION AND INFORMATION SYSTEMS

Process Automation, Manufacturing Infrastructure and Operational Monitoring

As on the date of this Draft Red Herring Prospectus, our manufacturing facility is equipped with process-specific automation and control systems, along with specialised plant and machinery across various stages of the manufacturing process. The manufacturing setup includes automated and semi-automated equipment for sugarcane crushing, juice clarification, concentration, crystallisation, centrifugation, drying, grading and packaging operations for Jaggery Powder and Khandsari Sugar manufacturing. These systems and equipment assist in monitoring, regulating and controlling operational parameters in real time, thereby enabling smoother operations, improved process efficiency, reduced operational interruptions, enhanced operational safety and effective utilisation of manufacturing resources.

ERP

Our Company uses "BOSS ERP" software for maintaining books of accounts, accounting records, inventory records and operational data. The ERP system assists in streamlining accounting functions, financial reporting, inventory management, operational tracking and record maintenance across business operations.

For risk associated with respect to our technology kindly refer to Risk Factor No 42 and 43 mentioned in Section titled 'Risk Factors' on page no. 48 and 48 of this Draft Red Herring Prospectus.

RESEARCH AND DEVELOPMENT

As on the date of this Draft Red Herring Prospectus, our Company has not incurred any expenditure specifically towards Research and Development.

INSURANCE

The details of insurance coverage of our Company, as on the date of Draft Red Herring Prospectus:

Sr. No.	Insurance Company	Type of Policy	Policy number	Asset insured	Validity period	Sum Insured (₹ In Lakhs)	Premium amount (₹ In Lakhs)
1	Go Digit General Insurance Ltd	Digit Employees Compensation Insurance Policy	D234425490	Employees Coverage 1. Coverage as per Employee's Compensation Act, 1923 and subsequent amendments thereof prior to the date of issue of this Policy 2. Liability under the Fatal Accidents Act & Common Law	10-11-2025 to 09-11-2026	840.54	0.58
2	ICICI Lombard General Insurance Company Limited	Group Personal Accident	4005/418609327/00/000	Coverage: Death resulting from Accident, Permanent Total Disablement (PTD) resulting from Accident, Permanent Partial Disablement (PPD)	24-11-2025 to 23-11-2026	2190.00	0.87
3	Generali Central Insurance Company Limited	Burglary (Housebreaking) Insurance – Policy (Other non-life insurance)	132/00/00/0627/FBG/0000400219	Plant & Machinery -- Plant & Machinery	06-06-2026 to 05-06-2027	3,306.00	0.08
4	Generali Central Insurance Company Limited	Laghu Lite-Policy (Fire Insurance)	132/00/00/0627/FLS/0000400215	Fire, Earthquake & Terrorism of Building Including Plinth and Foundation & Plant & Machinery	06-06-2026 to 05-06-2027	4,256.00	3.16
4	UNITED INDIA INSURANCE COMPANY LIMITED	UNITED BHARAT LAGHU UDYAM SURAKSHA POLICY	1413001125P113689341 [(1)]	Jaggery Powder and similar related stock Coverage Fire, Explosion or Implosion, Subsidence of land, impact damage, riots, strikes,	26-11-2025 to 25-11-2026	2000.00	3.00

Sr. No.	Insurance Company	Type of Policy	Policy number	Asset insured	Validity period	Sum Insured (₹ In Lakhs)	Premium amount (₹ In Lakhs)
				malicious damage, leakage from automatic sprinklers installations and theft			
5	UNITED INDIA INSURANCE COMPANY LIMITED	BURGLARY STANDARD POLICY	1413001225P113689384 [(2)]	Jaggery Powder and similar related stock Coverage Damage due to burglary or house-breaking and hold up	26-11-2025 to 25-11-2026	2000.00	0.12
6	BAJAJ GENERAL INSURANCE LIMITED	BHARAT SOOKSHMA UDYAM SURAKSHA POLICY	OG-26-2006-4056-00003161	Stock -Jaggery Powder Coverage Fire and Terrorism	14-01-2026 to 13-01-2027	500.00	0.96
7	Bajaj General Insurance Limited	BURGLARY INSURANCE POLICY	OG-26-2006-4010-00001729	Stock -Jaggery Powder Coverage Burglary and/or Robbery	14-01-2026 to 13-01-2027	500.00	0.12

Note:

(1) Endorsement Details for Policy 1413001125P113689341						
Insurance Company	**Endorsement Date**	**Endorsement No**	**Asset insured**	**Validity period**	**Revised Sum Insured (₹ In Lakhs)**	**Endorsement Premium (₹ In Lakhs)**
UNITED INDIA INSURANCE COMPANY LIMITED	15-01-2026	1	Jagger powder and similar related stock, Khandsari Sugar	15-01-2026 to 25-11-2026	2000.00	-
	26-02-2026	2	Jagger powder and similar related stock, Khandsari Sugar	26-02-2026 to 25-11-2026	2200.00	0.31

(2) Endorsement Details for Policy 1413001225P113689384						
Insurance Company	**Endorsement Date**	**Endorsement No**	**Asset insured**	**Validity period**	**Revised Sum Insured (₹ In Lakhs)**	**Endorsement Premium (₹ In Lakhs)**
UNITED INDIA INSURANCE COMPANY LIMITED	15-01-2026	1	Jagger powder and similar related stock, Khandsari Sugar	15-01-2026 to 25-11-2026	2000	-
	26-02-2026	2	Jagger powder and similar related stock, Khandsari Sugar	26-02-2026 to 25-11-2026	2200	0.01

Our Company has not made any claim for any insurance during the period FY 2023-2024, FY 2024-2025 and FY 2025-2026.

For risk associated with respect to our insurance kindly refer to Risk Factor No 34 mentioned in Section titled 'Risk Factors' on page no. 45 of this Draft Red Herring Prospectus.

INTELLECTUAL PROPERTY

For details regarding the Intellectual Property, see head titled "Approvals obtained/applied in relation to Intellectual Property Rights" under chapter titled "Government and Other Approvals – Intellectual property related approvals" on page no. 297 of the Draft Red Herring Prospectus.

For *risk associated with respect to our intellectual property kindly refer to Risk Factor No 17 mentioned in Section titled 'Risk Factors' beginning of page no. 36 of this Draft Red Herring Prospectus.*

GOVERNMENT APPROVALS/LICENSES

For details regarding Government Approvals and Licenses held by our Company, kindly refer to the chapter titled "Government Approvals" beginning on page no. 293 of the Draft Red Herring Prospectus.

MANAGEMENT PERCEPTON ON COMPANY'S LITIGATION

For details regarding our Company's litigation, kindly refer to the chapter titled "Outstanding Litigations" beginning on page no. 283 of the Draft Red Herring Prospectus.

The management of our Company confirms that the existing litigations are not so major that our Company's survival is dependent on the outcome of the aforementioned pending litigation.

(This rest of the page is intentionally left blank)

KEY REGULATIONS AND POLICIES IN INDIA

Except as otherwise specified in this Draft Red Herring Prospectus, we are subject to several central and state legislations which regulate substantive and procedural aspects of our business.

Additionally, our operations require sanctions from the concerned authorities, under the relevant Central and State legislations. The following is an overview of some of the important laws, policies and regulations which are pertinent to our business of manufacturing of Jaggery Powder, Khansari Sugar and Selling of Sugarcane Seeds. Taxation statutes such as the I.T. Act and applicable Labour laws, contractual laws, and intellectual property laws as the case may be, apply to us as they do to any other Indian company. The statements below are based on the current provisions of Indian law, and the judicial and administrative interpretations thereof, which are subject to change or modification by subsequent legislative, regulatory, administrative or judicial decisions. The regulations set out below may not be exhaustive and are only intended to provide general information to Investors and is neither designed nor intended to be a substitute for professional legal advice.

APPROVALS

For the purpose of the business undertaken by our Company, it is required to comply with various laws, statutes, rules, regulations, executive orders, etc. that may be applicable from time to time. *The details of such approvals have more particularly been described for your reference in the chapter titled "Government and Other Approvals" beginning on page no. 293 of this Draft Red Herring Prospectus.*

APPLICABLE LAWS AND REGULATIONS

The following description is a summary of certain key statutes, rules, regulations, notifications, memorandums, circulars and policies which are applicable to our Company and the business undertaken by our Company. The information detailed in this chapter, is based on the current provisions of key statutes, rules, regulations, notifications, memorandums, circulars, and policies, as amended, and is subject to future amendments, changes and/or modifications. The information detailed in this chapter has been obtained from sources available in the public domain. The regulations set out below may not be exhaustive and are only intended to provide general information to the investors and are neither designed nor intended to substitute professional legal advice. The statements below are based on the current provisions of Indian law, and remain subject to judicial and administrative interpretations thereof, which are subject to change or modification by subsequent legislative, regulatory, administrative or judicial decisions.

BUSINESS AND/OR KEY INDUSTRY AND/OR TRADE RELATED LAWS AND REGULATIONS

National Seed Policy, 2002

The main objectives of the National Seed Policy of 2002 are the provision of an appropriate climate for the seed industry to utilize available and prospective opportunities, safe guarding of the interests of Indian farmers and the conservation of agro-biodiversity. It was launched to – provide intellectual property protection to new varieties; usher this sector into planned development; protect the interest of farmers and encourage conservation of agro-biodiversity. This policy had 10 thrust areas as follows:

1. Varietal Development and Plant Varieties Protection;
2. Seed Production;
3. Quality Assurance;
4. Seed Distribution and Marketing;
5. Infrastructure facilities;
6. Transgenic Plant Varieties;
7. Import of seeds and planting material;
8. Export of seeds;
9. Promotion of Domestic Seed; and,
10. Strengthening of monitoring system.

The National Seeds Policy will be a vital instrument in attaining the objectives of doubling food production and making India hunger free. It is expected to provide the impetus for a new revolution in Indian agriculture, based on an efficient system for supply of seeds of the best quality to the cultivator.

The Seeds Act 1966

The Seeds Act, 1966 is an important legislation enacted by the Government of India to regulate the quality of seeds sold for agricultural purposes and to ensure that farmers receive seeds of assured quality. The Act aims to improve agricultural production by promoting the use of high-quality seeds with satisfactory standards of germination, purity, and health. It provides for the establishment of the Central Seed Committee to advise the government on seed-related matters, as well as Seed Certification Agencies and Seed Testing Laboratories to certify and test seeds according to prescribed standards. The Act also empowers Seed Analysts and Seed Inspectors to examine seed quality, collect samples, and enforce compliance with the law. It requires that notified seed varieties sold in the market meet specific standards and carry accurate labels indicating details such as variety, germination percentage, purity, net weight, and date of testing. By preventing the sale of misbranded or substandard seeds and prescribing penalties for violations, the Seeds Act, 1966 helps protect farmers' interests, ensures seed quality, and contributes to increased agricultural productivity in India.

The Food Safety and Standards Act, 2006 ("FSS Act")

The FSSA is an integrated food law that lays down standards and guidelines for consumer safety, protection of consumer health and regulation of the food sector. It consolidates the laws relating to food and provides for establishment of the Food Safety and Standards Authority of India ("FSSAI"). The FSSAI is responsible for laying down science-based standards for articles of food and to regulate their manufacture, packaging, storage, distribution, sale, and import, to ensure availability of safe and wholesome food for human consumption and for matters connected therewith or incidental thereto. The FSSA also lays down general provisions for food additives and processing of articles as well

The Prevention of Food Adulteration Act, 1954 and rules thereunder

The Prevention of Food Adulteration Act, 1954 ("Prevention of Food Adulteration Act") regulates the quality of food manufactured in India by specifying set standards on various articles of food. It proscribes the manufacture for sale, storage, sale, distribution or import of certain articles of food into India including any adulterated or misbranded food. It further empowers the food inspector to sample articles of food from persons selling, conveying, delivering or consigning the said food. It further provides for imprisonment of not less than 6 months which may be extended to 3 years or a fine of Rs 1,000 for contravention of the provisions therein

Food Safety and Standards (Food Products Standards and Food Additives) Regulations, 2011

The Food Safety and Standards (Food Product Standards and Food Additives) Regulation, 2011 came into force on August 5, 2011, and deals with the implementation of various Standards of Food contained therein. The key characteristics of the regulation are that it establishes microbiological requirements for different foods, specifies limits for different food additives used in different food groups, and provides detailed standards of various food products. These standards are vertical standards. It covers the implementation period, defines different food products and their processing methods, establishes vertical standards, offers information on specific standards of different food products, including food that is proprietary and food that has been exposed to radiation, defines different substances (additives) that can be added to food, and establishes standard limits for various food groups.

Food Safety and Standards (Licensing & Registration of Food Businesses) Regulation, 2011

Schedule 4 of the Food Safety & Standards (Licensing & Registration of Food Businesses) Regulation, 2011 provides guidelines for the various requirements that food businesses must comply with to ensure food safety and quality. This schedule outlines the infrastructure, hygiene, and sanitary conditions that establishments must meet. It includes specifications for the layout, design, and maintenance of premises, equipment, and facilities, as well as requirements for cleanliness and the safe handling of food. The goal is to create a standardized framework that helps businesses maintain high standards of food safety and ensures that they operate within a regulated and controlled environment. Compliance with these regulations is crucial for the protection of public health and for ensuring that food products are safe for consumption.

The Food Safety and Standards (Labelling and Display) Regulations, 2020

The Food Safety and Standards (Labelling and Display) Regulations, 2020 issued by FSSAI prescribe mandatory requirements for clear, accurate, and informative labelling of food products to protect consumer interests. These regulations require food labels to display essential information such as the name of the food, list of ingredients, nutritional information, allergen declarations, manufacturer details, FSSAI license number and logo, net quantity, date marking, and veg/non-veg symbol. They also regulate claims, advertisements, and display of food in retail outlets, prohibit misleading information, and mandate prominent disclosure of allergens and nutritional facts. The objective is to ensure transparency, enable informed consumer choices, and prevent deceptive practices in the food business.

Food Safety and Standards (Packaging) Regulations, 2018

The Food Safety and Standards (Packaging) Regulations, 2018 issued by FSSAI aim to ensure that food packaging materials are safe and do not pose any risk to human health. The regulations require that packaging materials used for food must be food-grade, non-toxic, and should not transfer harmful substances, odors, or tastes to the food. They prescribe standards for different materials such as plastics, paper, metal, glass, and inks, restrict the use of recycled plastics in direct food contact, and require that printing inks and adhesives do not contaminate food. Overall, the regulations place responsibility on Food Business Operators to use safe, hygienic, and compliant packaging to protect food quality and consumer safety

Sugar Control Order, 2025

The Sugar (Control) Order, 2025, issued by the Central Government under the Essential Commodities Act, repeals and replaces the Sugar (Control) Order, 1966, with the objective of modernising and consolidating regulation of the sugar sector. The Order provides a unified framework governing production, sale, stockholding, pricing, and export of sugar and its by-products. It mandates digital and real-time reporting of production and sales data by sugar mills to enhance transparency and monitoring. The scope of regulation is expanded to include raw sugar and large khandsari units, thereby ensuring compliance with Fair and Remunerative Price (FRP) payment obligations to sugarcane farmers. The Order empowers the Government to prescribe stock-holding limits and impose penalties to prevent hoarding and market distortion. It also standardises product definitions in alignment with FSSAI norms. Overall, the Order seeks to protect farmer interests, ensure market stability, and improve regulatory efficiency in the sugar industry.

The Boilers Act, 2025 ("Boilers Act")

The Boilers Act, 2025 is a modern legislation enacted to replace the Indian Boilers Act, 1923, with the objective of enhancing safety, promoting uniform technical standards, and improving ease of doing business while safeguarding life and property. The Act regulates the design, manufacture, installation, operation, inspection, and maintenance of boilers and boiler components across India. It contains provisions relating to mandatory registration of boilers before use, certification and periodic inspection for fitness, duties and responsibilities of owners, manufacturers, and operators, reporting and inquiry into boiler accidents, and penalties for non-compliance. By emphasizing digital governance, standardized procedures, and risk-based inspections, the Boilers Act, 2025 aims to ensure higher safety levels while simplifying regulatory processes.

The Indian Boiler Regulations, 1950 ("Boiler Regulations")

The Indian Boiler Regulations, 1950 prescribe detailed technical standards and procedural requirements to ensure the safety and reliability of boilers and boiler components. These regulations specify requirements relating to the design, construction, materials, fabrication, welding, inspection, testing, and certification of boilers, including standards for safety valves and other mountings. They also lay down procedures for approval of designs and drawings, registration of boiler components, periodic inspections, and pressure testing. The objective of the regulations is to ensure uniformity, technical soundness, and a high level of safety in the manufacture and operation of boilers throughout India.

Legal Metrology Act, 2009

The Legal Metrology Act, along with the relevant rules, establishes and enforces standards of weights and measures, regulates trade and commerce in weights, measures and other goods which are sold or distributed by weight, measure or numbers. Any transaction relating to goods or a class of goods shall be as per the weight, measurements or numbers prescribed by the Legal Metrology Act. The Central Government is empowered to appoint a director to exercise the powers and to discharge duties. The Legal Metrology Act prohibits the manufacture, packing, selling, importing, distributing, delivering, offer for sale of any pre-packaged commodity if such does not adhere to the standard regulations set out. The Legal Metrology (Packaged Commodities) Rules, 2011 ("Legal Metrology Rules") The Legal Metrology Rules are ancillary to the Legal Metrology Act, and set out to define various manufacturing and packing terminology. It lays out specific prohibitions where manufacturing, packing, selling, importing, distributing, delivering, offering for sale would be illegal and requires that any form of advertisement where the retail sale price is given must contain a net quantity declaration. Circumstances which are punishable are also laid out.

The Micro, Small and Medium Enterprises Development Act, 2006

The MSME Act seeks to provide for the promotion and development along with facilitating and enhancing competition among micro, small and medium enterprises. The MSME Act inter-alia empowers the Central Government to classify by notification, any class of enterprises including a company, a partnership, firm or any other undertaking engaged in the manufacture or production as specified in the first schedule to The Industries (Development and Regulation) Act, 1951. The MSME Act also stipulates that any person who intends to establish, a micro or small enterprise or a medium enterprise engaged in rendering of services, may at his discretion and a medium enterprise engaged in the manufacture or production of goods as specified hereinabove, file a memorandum of micro, small or medium enterprise, as the case may be, with the prescribed authority.

LAWS RELATING TO SPECIFIC STATE WHERE ESTABLISHMENT IS SITUATED:

Maharashtra Shops and Establishments (Regulation of Employment and Condition of Service) Act 2017

The Maharashtra Shops and Establishments (Regulation of Employment and Condition of Service) Act, 2017 modernizes the regulation of employment practices and working conditions in shops, commercial establishments, residential hotels, restaurants, and similar workplaces. It focuses on streamlining compliance while protecting employee rights. Key provisions include flexibility in working hours, ensuring proper holidays, paid leave, and rest intervals, along with safeguards for overtime compensation and protection against unfair dismissal. The act introduces mandatory digital registration for establishments and emphasizes maintaining updated records electronically. It also includes welfare measures like a crèche facility for establishments employing 50 or more workers and provisions to ensure a safe and conducive work environment, particularly for women. The act aims to balance the interests of employers and employees in a dynamic business environment.

Maharashtra Tax on Professions, Trade, Callings and Employments Act, 1975 (the "Act")

The professional tax slabs in India are applicable to those citizens of India who are either involved in any profession or trade. The State Government of each State is empowered with the responsibility of structuring as well as formulating the respective professional tax criteria and is also required to collect funds through professional tax. Professional taxes are charged on the incomes of individuals, profits of business or gains in vocations. Professional tax is charged as per the List II of the Constitution. The professional tax is classified under various tax slabs in India. The tax payable under the State, acts by any person earning a salary or wage shall be deducted by his employer from the salary or wages payable to such person before such salary or wages is paid to him, and such employer shall, irrespective of whether such deduction has been made or not when the salary and wage is paid to such persons, be liable to pay tax on behalf of such person and employer has to obtain the registration from the assessing authority in the prescribed manner.

Maharashtra Fire Prevention and Life Safety Measures Act, 2006 and its rules.

The Maharashtra Fire Prevention and Life Safety Measures Act, 2006 is enacted to ensure fire prevention, fire safety, and protection of life and property in buildings across the state. The Act mandates the provision, maintenance, and periodic inspection of fire prevention and life safety measures in residential, commercial, and industrial premises. It places responsibility on owners and occupiers to install and maintain approved fire safety systems, obtain fire safety certification, and comply with directions issued by the fire authorities. The Act also empowers the fire department to inspect premises, enforce compliance, and take action, including penalties, to prevent fire hazards and enhance overall public safety.

Maharashtra Molasses Control Act, 1956

The Maharashtra Molasses Control Act, 1956 was enacted to regulate the production, storage, supply, transport, and disposal of molasses within the State of Maharashtra. The Act empowers the State Government to control molasses as an essential commodity to ensure its equitable distribution and prevent misuse. It mandates licensing for producers, occupiers of distilleries, and persons dealing in molasses. The Government may fix prices, issue permits, and prescribe conditions for sale and movement of molasses. Unauthorized possession, transport, or sale of molasses is prohibited under the Act. Penal provisions are provided for contravention of its provisions or orders made thereunder. The Act aims to safeguard public interest and support industries dependent on regulated molasses supply.

GENERAL CORPORATE:

Companies Act, 2013

The Companies Act, of 2013, has replaced the Companies Act, of 1956 in a phased manner. The Act received the assent of the President of India on 29th August 2013. The Companies Act deals with the incorporation of companies and the procedure for incorporation and post-incorporation. The conversion of a private company into a public company and vice versa is also laid down under the Companies Act, of 2013. The procedure related to the appointment of Directors. The procedure relating to winding up, voluntary winding up, and appointment of liquidator also forms part of the Act. Further, Schedule V (read with sections 196 and 197), Part I lays down the conditions to be fulfilled for the appointment of a managing or whole-time director or manager. It provides the list of Acts under which if a person is prosecuted, he cannot be appointed as the director or Managing Director or Manager of a Company. The provisions relating to the remuneration of the directors payable by the companies is under Part II of the said schedule.

The Registration Act, 1908

The act is used for proper recording of transactions relating to other immovable property also. The Registration Act provides for registration of other documents also, which can give these documents more authenticity. Registering authorities have been provided in all the districts for this purpose.

Competition Act, 2002

The Competition Act, 2002 prohibits anti-competitive agreements, abuse of dominant positions by enterprises and regulates combinations in India. The Competition Act also established the Competition Commission of India (the ―CCI) as the authority mandated to implement the Competition Act. The provisions of the Competition Act relating to combinations were notified recently on March 4, 2011 and came into effect on June 1, 2011. Combinations which are likely to cause an appreciable adverse effect on competition in a relevant market in India are void under the Competition Act. A combination is defined under Section 5 of the Competition Act as an acquisition, merger or amalgamation of enterprise(s) that meets certain asset or turnover thresholds. There are also different thresholds for those categorized as Individuals and Group. The CCI may enquire into all combinations, even if taking place outside India, or between parties outside India, if such combination is Likely to have an appreciable adverse effect on competition in India. Effective June 1, 2011, all combinations have to be notified to the CCI within 30 days of the execution of any agreement or other document for any acquisition of assets, shares, voting rights or control of an enterprise under Section 5(a) and (b) of the Competition Act (including any binding document conveying an agreement or decision to acquire control, shares, voting rights or assets of an enterprise); or the board of directors of a company (or an equivalent authority in case of other entities approving a proposal for a merger or amalgamation under Section 5(c) of the Competition Act. The obligation to notify a combination to the CCI falls upon the acquirer in case of an acquisition, and on all parties to the combination jointly in case of a merger or amalgamation.

The Indian Contract Act, 1872

The Indian Contract Act, of 1872 (Contract Act) codifies the way in which a contract may be entered into, executed, implementation the provisions of a contract, and the effects of a breach of a contract. A person is free to contract on any terms he chooses. The Contract Act consists of limiting factors subject to which contract may be entered into, executed and the breach enforced. It provides a framework of rules and regulations that govern the formation and performance of contracts. The contracting parties themselves decide the rights and duties of the parties and terms of the agreement.

Specific Relief Act, 1963

The Specific Relief Act, 1963 is complimentary to the provisions of the Contract Act and the Transfer of Property Act, as the Act applies both to movable property and immovable property. The Act applies in cases where the Court can order specific performance of a contract. Specific relief can be granted only for purpose of enforcing individual civil rights and not for the mere purpose of enforcing a civil law. Specific performance means Court will order the party to perform his part of agreement, instead of imposing on him any monetary liability to pay damages to other party.

Negotiable Instruments Act, 1881

In India, cheques are governed by the Negotiable Instruments Act, of 1881, which is largely a codification of the English Law on the subject. The Act provides effective legal provisions to restrain people from issuing cheques without having sufficient funds in their account or any stringent provision to punish them in the event of such cheques not being honored by their bankers and returned unpaid. Section 138 of the Act, creates statutory offense in the matter of dishonour of cheques on the ground of insufficiency of funds in the account maintained by a person with the banker which is punishable with imprisonment for a term that may extend to two years, or with fine which may extend to twice the amount of the cheque, or with both.

Sale of Goods Act, 1930

The law relating to the sale of goods is codified in the Sale of Goods Act, of 1930. It defines sale and agreement to sell as a contract whereby the seller transfers or agrees to transfer the property in goods to the buyer for a price and provides that there may be a contract of sale between part owner and another and that the contract of sale may be absolute or conditional.

The Indian Stamp Act, 1899

The Indian Stamp Act, 1899 provides for the levy of stamp duty on instruments recording transactions relating to property, commercial arrangements, and other legal rights and obligations. The Act specifies the instruments chargeable to stamp duty, the rate of duty, and the consequences of non-payment or insufficient payment of stamp duty. Proper stamping is a condition precedent for admissibility of documents in evidence before courts and authorities. The Act also empowers State Governments to prescribe rates of stamp duty in respect of instruments falling within their jurisdiction. The Indian Stamp Act aims to ensure revenue collection and authenticate legal documents.

The Consumer Protection Act, 2019

The Consumer Protection Act, 2019 was enacted to provide for better protection of the interests of consumers and to replace the Consumer Protection Act, 1986. The Act establishes a three-tier consumer dispute redressal mechanism at the District, State, and National levels. It introduces concepts such as product liability, unfair trade practices, and misleading advertisements, and provides remedies including replacement, refund, compensation, and discontinuation of unfair practices. The Act also establishes the Central Consumer Protection Authority (CCPA) to regulate matters relating to violation of consumer rights and impose penalties. The Consumer Protection Act, 2019 seeks to strengthen consumer rights in the modern marketplace, including e-commerce transactions.

The Limitation Act, 1963

The Limitation Act, 1963 prescribes the time limits within which legal proceedings must be initiated for various civil claims and applications. The Act aims to prevent stale or delayed claims and ensure legal certainty. It specifies different limitation periods for suits, appeals, and applications and provides rules for computation of limitation, including exclusions and extensions in specified circumstances. The Act also recognises situations where delay may be condoned by courts if sufficient cause is shown. The Limitation Act governs the enforceability of rights by prescribing procedural timelines rather than extinguishing substantive rights.

The Insolvency and Bankruptcy Code, 2016

The Insolvency and Bankruptcy Code, 2016 ("IBC") provides a consolidated legal framework for insolvency resolution and liquidation of corporate persons, partnership firms, and individuals in a time-bound manner. The Code aims to maximise the value of assets, promote entrepreneurship, and balance the interests of all stakeholders. It establishes institutional mechanisms such as the National Company Law Tribunal (NCLT), Insolvency and Bankruptcy Board of India (IBBI), and insolvency professionals. The Code sets out procedures for corporate insolvency resolution, liquidation, and voluntary liquidation, and prioritises creditor-driven resolution. The IBC represents a shift from debtor-in-possession to creditor-in-control regime.

(The rest of the page is intentionally left blank)

The Arbitration and Conciliation Act, 1996

The Arbitration and Conciliation Act, 1996 governs domestic arbitration, international commercial arbitration, conciliation, and enforcement of arbitral awards in India. The Act is based on the UNCITRAL Model Law and aims to promote party autonomy and speedy dispute resolution. It provides for the appointment of arbitrators, conduct of arbitral proceedings, interim measures, and challenge and enforcement of arbitral awards. The Act limits judicial intervention in arbitral proceedings except in specified circumstances. It also recognises and enforces foreign arbitral awards in accordance with international conventions. The Arbitration Act seeks to provide an efficient alternative to traditional litigation.

EMPLOYMENT AND LABOUR LAWS

The Code on Wages, 2019 (the "Code")

The Code received the assent of the President of India on August 8, 2019 and has been implemented with effect from 21 November 2025. The Code has replaced the four previous laws namely (i) the Payment of Wages Act, 1936, (ii) the Minimum Wages Act, 1948, (iii) the Payment of Bonus Act, 1965, and (iv) the Equal Remuneration Act, 1976. The Code applies to all employees, irrespective of sector, type of establishment, or wage ceiling. The Central Government is empowered to fix a national floor minimum wage and the State Governments cannot prescribe wages lower than the national floor wage. The Code streamlines compliance through digitized and centralized record keeping and wage registers. The Code ensures gender equality, equal remuneration for all employees irrespective of gender.

Occupational Safety, Health and Working Conditions Code, 2020

The Government of India enacted 'The Occupational Safety, Health and Working Conditions Code, 2020 which received the assent of the President of India on September 28, 2020 and has been implemented with effect from 21 November 2025. It has subsumed several separate legislations, including the Factories Act, 1948, the Contract Labour (Regulation and Abolition) Act, 1970, the Inter-State Migrant Workmen (Regulation of Employment and Conditions of Service) Act, 1979 and the Building and Other Construction Workers (Regulation of Employment and Conditions of Service) Act, 1996.

Code on Social Security, 2020

The Government of India enacted 'The Code on Social Security, 2020 which received the assent of the President of India on September 28, 2020 and has been implemented with effect from 21 November 2025. It has subsumed several separate legislations including the Employee's Compensation Act,1923, the Employees' State Insurance Act, 1948, the Employees' Provident Funds and Miscellaneous Provisions Act, 1952, the Maternity Benefit Act, 1961 and the Payment of Gratuity Act, 1972. The Code on Social Security, 2020 extends social security benefits to organised, unorganised, gig workers, platform workers and self-employed persons. It aims to create a dedicated Social Security Fund for unorganised, gig and platform workers, financed via contributions, CSR, fines etc. It also allows gratuity eligibility provides enhanced maternity benefits, crèche facilities, enabling women's participation and emphasizes on digital registers, self-assessment for cess, decriminalisation of certain offences and streamlined compliance

The Public Liability Insurance Act, 1991, and the Public Liability Insurance Rules, 1991

The PLI Act imposes liability on the owner or controller of hazardous substances for any damage arising out of an accident involving such hazardous substances. A list of hazardous substances covered by the legislation has been enumerated by the government by way of a notification. Under the law, the owner or handler is also required to take out an insurance policy insuring against liability. The rules made under the PLI Act mandate the employer to contribute towards the Environmental Relief Fund a sum equal to the premium paid on the insurance policies.

(The rest of the page is intentionally left blank)

The Sexual Harassment of Women at Workplace (Prevention, Prohibition and Redressal) Act, 2013 (the "Act")

In order to curb the rise in sexual harassment of women at workplace, this Act was enacted for prevention and redressal of complaints and for matters connected therewith or incidental thereto. The terms sexual harassment and workplace are both defined in the Act. Every employer should also constitute an "Internal Complaints Committee" and every officer and member of the company shall hold office for a period of not exceeding three years from the date of nomination. Any aggrieved woman can make a complaint in writing to the Internal Committee in relation to sexual harassment of female at workplace. Every employer has a duty to provide a safe working environment at workplace which shall include safety from the persons coming into contact at the workplace, organizing awareness programs and workshops, display of rules relating to the sexual harassment at any conspicuous part of the workplace, provide necessary facilities to the internal or local committee for dealing with the complaint, such other procedural requirements to assess the complaints.

Child Labour (Prohibition and Regulation) Act, 1986 (the "CLPR Act")

The "CLPR Act seeks to prohibit the engagement of children in certain employments and to regulate the conditions of work of children in certain other employments. Part B of the Schedule to the CLPR Act strictly prohibits employment of children in cloth printing, dyeing and weaving processes and cotton ginning and processing and production of hosiery goods.

The Industrial Relations Code, 2020 ("Industrial Code")

The Ministry of Law and Justice, with an intent to consolidate and amend laws relating to trade unions, conditions of employment in industrial establishment or undertaking, investigation and settlement of industrial dispute, has introduced the Industrial Code. The Code provides that the Central Government may repeal the provisions of the Trade 146 Unions Act, 1926, the Industrial Employment (Standing Orders) Act, 1946, and the Industrial Disputes Act, 1947 and may supersede them with the applicability of any provision of the Industrial Code. The Industrial Code is a central legislation and extends to the whole of India. The Industrial Code empowers the Central Government to require an establishment in which one hundred or more workers are employed or have been employed on any day in the preceding twelve months to constitute a works committee consisting of representatives of employer and workers engaged in the establishment. The code further requires every establishment with twenty or more workers to have grievance redressal committees for resolution of disputes arising out of individual grievances. The code bars the jurisdiction of civil courts to any matter to which the provisions of the Industrial Code apply, and provides for establishment of industrial tribunals for adjudication of such matters. The Industrial Code provides for provisions pertaining to lay-off and retrenchment of employees and closure of establishments and compensation provisions in relation thereto. The Industrial Code provides for monetary fines, penalties and imprisonment in case of contravention of the provisions of the code.

Payment of Gratuity Act, 1972, as amended (the "Gratuity Act")

The Gratuity Act establishes a scheme for the payment of gratuity to employees engaged in every factory, mine, oil field, plantation, port and railway company, every shop or establishment in which ten or more persons are employed or were employed on any day of the preceding twelve months and in such other establishments in which ten or more employees are employed or were employed on any day of the preceding twelve months, as notified by the Central Government from time to time. Penalties are prescribed for non-compliance with statutory provisions. Under the Gratuity Act, an employee who has been in continuous service for a period of five years will be eligible for gratuity upon his retirement, resignation, superannuation, death or disablement due to accident or disease. However, the entitlement to gratuity in the event of death or disablement will not be contingent upon an employee having completed five years of continuous service. The maximum amount of gratuity payable may not exceed 1 million.

Certain other laws and regulations that may be applicable to our Company in India include the following:

- Industrial Disputes Act, 1947 ("ID Act")
- Payment of Bonus Act, 1965 ("POB Act") 147
- Inter-State Migrant Workers (Regulation of Employment and Conditions of Service) Act, 1979
- Equal Remuneration Act, 1976 ("ER Act")
- Contract Labour (Regulation and Abolition) Act, 1970 (CLRA) and Contract Labour (Regulation and Abolition) Central Rules, 1971 (Contract Labour Rules)
- Workmen Compensation Act, 1923 ("WCA")
- Maternity Benefit Act, 1961 ("Maternity Act")

- Industrial Employment Standing Orders Act, 1946
- Apprentices Act, 1961
- The Building and Other Construction Workers (Regulation of Employment and Conditions of Service) Act, 1996

TAX RELATED LEGISLATIONS

Income Tax Act, 2025 (the "IT Act")

The IT Act is applicable to every Company, whether domestic or foreign whose income is taxable under the provisions of the IT Act or Rules made thereunder depending upon its Residential Status and Type of Income involved. The IT Act provides for the taxation of persons resident in India on global income and persons not resident in India on income received, accruing or arising in India or deemed to have been received, accrued or arising in India. Every Company assessable to income tax under the IT Act is required to comply with the provisions thereof, including those relating to Tax Deduction at Source, Advance Tax, Minimum Alternative Tax and like. Every such Company is also required to file its returns by September 30 of each assessment year.

Central Goods and Services Tax Act, 2017 (the "GST Act")

The GST Act levies indirect tax throughout India to replace many taxes levied by the Central and State Governments. The GST Act was applicable from July 1, 2017, and combined the Central Excise Duty, Commercial Tax, Value Added Tax (VAT), Food Tax, Central Sales Tax (CST), Introit, Octroi, Entertainment Tax, Entry Tax, Purchase Tax, Luxury Tax, Advertisement Tax, Service Tax, Customs Duty, Surcharges. GST is levied on all transactions such as sale, transfer, purchase, barter, lease, or import of goods and/or services. India has adopted a dual GST model, meaning that taxation is administered by both the Union and State Governments. Transactions made within a single state is levied with Central GST (CGST) by the Central Government and State GST (SGST) by the government of that state. For inter-state transactions and imported goods or services, an Integrated GST (IGST) is levied by the Central Government. GST is a consumption-based tax; therefore, taxes are paid to the state where the goods or services are consumed and not the state in which they were produced.

Customs Act, 1962

The provisions of the Customs Act, 1962 and rules made there under are applicable at the time of import of goods i.e., bringing into India from a place outside India or at the time of export of goods i.e., taken out of India to a place outside India. Any Company requiring to import or export any goods is first required to get itself registered and obtain an IEC (Importer Exporter Code).

ENVIRONMENTAL LAWS

The Environment Protection Act, 1986 ("EPA") and Environment (Protection) Rules, 1986

The EPA is the umbrella legislation in respect of the various environmental protection laws in India. Under the EPA, the GOI is empowered to take any measure it deems necessary or expedient for protecting and improving the quality of the environment and preventing and controlling environmental pollution. This includes rules for, inter alia, laying down standards for the quality of environment, standards for emission of discharge of environment pollutants from various sources, as provided under the Environment (Protection) Rules, 1986, inspection of any premises, plant, equipment, machinery, examination of manufacturing processes and materials likely to cause pollution. Penalties for violation of the EPA include fines up to ₹ 100,000 or imprisonment of up to five years, or both. If the violation continues beyond a period of one year after the date of conviction, the offender shall be punishable with imprisonment for a term which may extend upto seven years. There are provisions with respect to certain compliances by persons handling hazardous substances, furnishing of information to the authorities in certain cases, establishment of environment laboratories and appointment of Government analysts.

(The rest of the page is intentionally left blank)

Air (Prevention and Control of Pollution) Act, 1981 ("Air Act")

The Air Act has been enacted to provide for the prevention, control and abatement of air pollution. The Air Act was enacted with a view to protect the environment and surroundings from any adverse effects of the pollutants that may emanate from any factory or manufacturing operation or activity. It lays down the limits with regard to emissions and pollutants that are a direct result of any operation or activity. Periodic checks on the factories are mandated in the form of yearly approvals and consents from the respective state pollution control boards. Pursuant to the provisions of the Air Act, any person, establishing or operating any industrial plant within an air pollution control area, must obtain the consent of the relevant state pollution control board, prior to establishing or operating such industrial plant.

The state pollution control board may then grant consent, subject to mentioned conditions relating to pollution control equipment to be installed at the facilities. No person operating any industrial plant in any air pollution control area is permitted to discharge the emission of any air pollutant in excess of the standards laid down by the state pollution control board.

Water (Prevention and Control of Pollution) Act, 1974 ("Water Act") and Water (Prevention and Control of Pollution) Act, 1977

The Water Act aims to prevent and control water pollution as well as restore water quality by establishing and empowering the central and state pollution control board. Under the Water Act, any person establishing any industry, operation or process, any treatment or disposal system, using any new or altered outlet for the discharge of sewage or new discharge of sewage, must obtain the consent of the relevant state pollution control board, which is empowered to establish standards and conditions that are required to be complied with.
In certain cases, the state pollution control board may cause the local magistrates to restrain the activities of such person who is likely to cause pollution. Penalty for the contravention of the provisions of the Water Act include imposition of fines and/or imprisonment.

Hazardous and Other Wastes (Management and Transboundary Movement) Rules, 2016, ("Hazardous Wastes Rules")

The Hazardous Wastes Rules impose an obligation on every occupier of a facility generating hazardous waste to deploy safe and environmentally sound measures for handling of hazardous waste generated at such facility. Every person engaged in generation, processing, treatment, packaging, storage, transportation, use, collection, destruction, conversion, offering for sale and transfer of hazardous waste, must obtain an approval from the applicable state pollution control board. The occupier, the importer, the transporter and the operator of disposal facility are liable for damages to the environment or third party resulting from the improper handling and disposal of hazardous waste.

INTELLECTUAL PROPERTY LEGISLATIONS:

Intellectual Property (IP) legislation refers to the set of laws designed to protect creations of the mind, such as inventions, artistic works, designs, symbols, and trade secrets. It grants creators exclusive rights over their intellectual assets to encourage innovation and creativity while balancing public interest.

In general, Intellectual Property Rights include but are not limited to the following enactments:

The Copyright Act, 1957 ("Copyright Act")

The Copyright Act governs copyrights subsisting in original literary, dramatic, musical or artistic works, cinematograph films, and sound recordings, including computer programmes, tables and compilations including computer databases. Even while copyright registration is not a prerequisite for acquiring or enforcing a copyright in an otherwise copyrightable work, registration under the Copyright Act acts as prima facie evidence of the particulars entered therein and helps expedite infringement proceedings and reduce delay caused due to evidentiary considerations.

The Trademarks Act, 1999

The Trademarks Act, 1999, aims to protect trademarks and prevent their fraudulent use. It consolidates and amends the law related to trademarks, providing for their registration and better protection. The Act's objective is to safeguard the rights of individuals who manufacture and sell goods with distinct trademarks against infringement by others. The Act also introduced stricter penalties for trademark infringement, offering stronger legal recourse for trademark owners.

OTHER LAWS:

Foreign Trade (Development and Regulation) Act, 1992 ("FTA")

The FTA is the main legislation concerning foreign trade in India. The FTA, read along with the Foreign Trade (Regulation) Rules, 1993, provides for the development and regulation of foreign trade by facilitating imports into, and augmenting exports from, India and for matters connected therewith or incidental thereto. It authorizes the government to formulate as well as announce the export and import policy and to keep amending the same on a timely basis. The government has also been given a wide power to prohibit, restrict and regulate the exports and imports in general as well as specified cases of foreign trade. The FTA read with the Foreign Trade Policy, 2023, prohibits anybody from undertaking any import or export except under an importer-exporter code ("IEC") number granted by the Director General of Foreign Trade. Hence, every entity in India engaged in any activity involving import/export is required to obtain an IEC unless specifically exempted from doing so. The IEC shall be valid until it is cancelled by the issuing authority. An IEC number allotted to an applicant is valid for all its branches, divisions, units and factories. Failure to obtain the IEC number shall attract penalty under the FTA.

Foreign Exchange Management Act, 1999 & Rules thereunder

Foreign investment in India is governed primarily by the provisions of the FEMA, and the rules, regulations and notifications thereunder, as issued by the RBI from time to time and the FEMA Rules and the Consolidated FDI Policy

In terms of the Consolidated FDI Policy, foreign investment is permitted (except in the prohibited sectors) in Indian companies either through the automatic route or the Government route, depending upon the sector in which the foreign investment is sought to be made. In terms of the Consolidated FDI Policy, the work of granting government approval for foreign investment under the Consolidated FDI Policy and FEMA has now been entrusted to the concerned administrative ministries/departments. The FEMA Rules were enacted on October 17, 2019 in supersession of the Foreign Exchange Management (Transfer or Issue of Security by a Person Resident Outside India) Regulations, 2017, except for things done or omitted to be done before such supersession. The total holding by any individual NRI, on a repatriation basis, shall not exceed five percent of the total paid-up equity capital on a fully diluted basis or shall not exceed five percent of the paid-up value of each series of debentures or preference shares or share warrants issued by an Indian company and the total holdings of all NRIs and OCIs put together shall not exceed 10% of the total paid-up equity capital on a fully diluted basis or shall not exceed 10% of the paid-up value of each series of debentures or preference shares or share warrant. Provided that the aggregate ceiling of 10% may be raised to 24% if a special resolution to that effect is passed by the general body of the Indian company. The total holding by each FPI or an investor group, shall be less than 10% of the total paid-up equity capital on a fully diluted basis or less than 10 percent of the paid-up value of each series of debentures or preference shares or share warrants issued by an Indian company and the total holdings of all FPIs put together, including any other direct and indirect foreign investments in the Indian company permitted under these rules, shall not exceed 24% of paid-up equity capital on a fully diluted basis or paid-up value of each series of debentures or preference shares or share warrants. The said limit of 10% and 24% shall be called the individual and aggregate limit, respectively.

(This rest of the page is intentionally left blank)

OUR HISTORY AND CERTAIN CORPORATE MATTERS

HISTORY AND BACKGROUND

Our Company was originally incorporated on June 24, 2022 as "Shree Siddhivinayak Greentech Industries Private Limited", a Private Limited Company under the provisions of the Companies Act, 2013, vide Certificate of Incorporation dated June 25, 2022, issued by the Registrar of Companies, Central Processing Centre. Our Company's main objects is to carry on the business of manufacturing and trading of Jaggery and Sugar including all its "by-products" like bagasses, press mud, molasses and ash. Further the main objects of our Company also allow our Company to undertake the manufacturing, trading and cultivation of food products. Our Company filed e-form 20A for submission of declaration of commencement of business on September 16, 2022.

Our company initially started with the manufacturing of Jaggery Powder in the FY 2023-2024. Thereafter, our Company entered the segment of value added food products i.e. Jaggery based Pre-Mixes (Instant Rice Kheer, Jaggery Tea, Jaggery Laddoo, Jaggery Lapsi and Jaggery Coffee premixes) during the FY 2024-2025. Thereafter, our Company started the manufacturing of Khandsari Sugar during FY 2025-2026. Further during the same period our Company also ventured into backward integration of cultivation and sale of Sugarcane Seeds ("Cane Seeds").

Subsequently, our Company was converted from a Private Limited Company to a Public Limited Company pursuant to a special resolution passed by the shareholders at the Extraordinary General Meeting held on January 30, 2026. The name of our Company was consequently changed to "Shree Siddhivinayak Greentech Industries Limited", and a fresh Certificate of Incorporation was issued by the Registrar of Companies, Central Processing Centre, on March 27, 2026.

Thereafter, the MOA of our Company was amended to reflect the insertion of the following new clause to the main objects, vide Special Resolution passed at the Extraordinary General Meeting held June 16, 2026:

To carry on the business of farming, horticulture, tissue culture, biotech, floriculture, sericulture, cultivation of all kinds of food grains, seeds, nursery, fruits, fodders and to carry on the business of plantation of all types of poultry farming, dairy farming dairy products and agricultural plantations.

The same was approved by the Registrar of Companies, Central Processing Centre vide issue of "Certificate of Registration of the Special Resolution confirming Alteration of Object Clause(s)" dated July 02, 2026.

It is to be noted that the aforesaid amendment did not result in any material change in the scope of our Company's existing operations but is intended solely for the purpose of clarity, precision, and better presentation of our Company's objects in its constitutional document.

The Corporate Identification Number of our Company is U10720MH2022PLC385368. The registered office of our Company is situated at Block Number 1 and 4 Floor No-1 and 2 Survey No 120, Plot No 4 & C.T.S. Number-5343 Sambhaji Nagar Behind DIC, Osmanabad, Maharashtra, India, 413501.

The Promoters of our Company are Mr. Dattatray Kashinath Kulkarni and Mrs. Dipali Dattatraya Kulkarni.

CHANGES IN REGISTERED OFFICE OF THE COMPANY SINCE INCORPORATION

Effective date of change	Details of registered office	Reason(s) for change
At Incorporation i.e. June 24, 2022	27/2718 Sambhaji Nagar Kakade Plot, Osmanabad, Maharashtra, India, 413501	The address of our Company has not undergone any change. However, the ROC e-form for change in registered office has been filed only to reflect more precise address as the address previously appearing was the generic address of the location.
April 01, 2026	Block Number 1 and 4 Floor No-1 and 2 Survey No 120, Plot No 4 & C.T.S. Number-5343 Sambhaji Nagar Behind DIC, Osmanabad, Maharashtra, India, 413501	

MAIN OBJECTS OF THE COMPANY

The main objects of our Company as set forth in the Memorandum of Association of our Company are as follows:

1. To purchase, manufacture, produce, boil, refine, prepare, brew, import, export, buy, sell and generally to deal in all varieties of sugar, sugar candy, jaggery, khandsari sugar, sugar beet, sugar cane, molasses, syrups, melada, alcohol, spirits and all products and by-products, thereof such as confectionery, glucose, bagasses, bagasse boards, paper, paper pulp, butyl alcohol, acetone, carbon-di-oxide, hydrogen, potash, cane wax, fertilizers, cattle feed and food products generally.

2. To carry on of business of Manufacturers, Processors, Developers, cultivation, reprocesses, growers, deep freezers, importers, exporter, buyers, sellers, wholesalers, transporters, marketers, retailers, distributers, preservers, consultants, and dealers in and canning agents of agro and horticultural products, floriculture based products mixtures, fertilizers, insecticides chemical.

3. To carry on the business of farming, horticulture, tissue culture, biotech, floriculture, sericulture, cultivation of all kinds of food grains, seeds, nursery, fruits, fodders and to carry on the business of plantation of all types of poultry farming, dairy farming dairy products and agricultural plantations.

AMENDMENTS TO THE MEMORANDUM OF ASSOCIATION

The following table set forth details of the amendments to our Memorandum of Association since incorporation:

Date of Amendment / Shareholders' Resolution	Nature of Amendment
October 20, 2022	Clause V of our MOA was amended to reflect the increase in the Authorized Share Capital of our Company. The Authorized Share Capital of our Company increased from ₹10,00,000/- divided into 10,000 Equity shares of ₹100/- each to ₹5,10,00,000/- comprising of ₹10,00,000/- divided into 10,000 Equity shares of ₹100/- each and ₹5,00,00,000/- divided into 50,000 8% Non-Cumulative Non-Convertible Preference Shares of ₹ 1,000/- each vide passing of an Ordinary Resolution at the Extraordinary General Meeting held October 20, 2022.
March 11, 2024	Clause V of our MOA was amended to reflect the increase in the Authorized Share Capital of our Company. The Authorized Share Capital of our Company increased from ₹5,10,00,000/- comprising of ₹10,00,000/- divided into 10,000 Equity shares of ₹100/- each and ₹5,00,00,000/- divided into 50,000 8% Non-Cumulative Non-Convertible Preference Shares of ₹1,000/- each to ₹9,90,00,000/- comprising of ₹4,90,00,000/- divided into 4,90,000 Equity shares of ₹100/- each and ₹5,00,00,000/- divided into 50,000 8% Non-Cumulative Non-Convertible Preference Shares of ₹ 1,000/- each vide passing of an Ordinary Resolution at the Extraordinary General Meeting held March 11, 2024.
August 26, 2024	Clause V of our MOA was amended to reflect the increase in the Authorized Share Capital of our Company. The Authorized Share Capital of our Company was increased from ₹9,90,00,000/- comprising of ₹4,90,00,000/- divided into 4,90,000 Equity shares of ₹100/- each and ₹5,00,00,000/- divided into 50,000 8% Non-Cumulative Non-Convertible Preference Shares of ₹1,000/- each to ₹13,90,00,000/- comprising of ₹8,90,00,000/- divided into 8,90,000 Equity shares of ₹100/- each and ₹5,00,00,000/- divided into 50,000 8% Non-Cumulative Non-Convertible Preference Shares of ₹ 1,000/- each vide passing of an Ordinary resolution at the Extraordinary General Meeting held August 26, 2024.
January 12, 2026	Clause V of our MOA was amended to reflect a change in the Authorized Share Capital of our Company. The existing Authorized Preference Share Capital of our Company amounting to ₹5,00,00,000/- divided into 50,000 8% Non-Cumulative Non-Convertible Preference Shares of ₹ 1,000/- each, was reclassified into Authorized Equity Share Capital of our Company. Consequently, the Authorized Share Capital of our Company was changed to ₹13,90,00,000/- divided into 13,90,000 Equity Share of ₹100/- each vide passing of an Ordinary resolution at the Extraordinary General Meeting held January 12, 2026.
January 23, 2026	Clause V of our MOA was amended to reflect sub-division in the Share Capital of our Company. The existing Authorized Share Capital of our Company comprising of 13,90,000 Equity shares of ₹ 100/- each amounting to ₹ 13,90,00,000/- was sub-

Date of Amendment / Shareholders' Resolution	Nature of Amendment
	divided into 1,39,00,000 Equity shares of ₹ 10/- each amounting to ₹13,90,00,000/- vide passing of Ordinary Resolution at the Extraordinary General Meeting held on January 23, 2026.
January 30, 2026	Clause I of our MOA was amended to reflect the change in the name of our Company from 'Shree Siddhivinayak Greentech Industries Private Limited' to 'Shree Siddhivinayak Greentech Industries Limited', vide passing of Special Resolution at the Extraordinary General Meeting held on January 30, 2026 for conversion of our Company from a private limited company to a public limited Company and consequent to which a fresh Certificate of Incorporation was issued by Registrar of Companies, Central Processing Centre, on March 27, 2026.
May 19, 2026	Clause V of our MOA was amended to reflect the increase in the Authorized Share Capital of our Company. The Authorized Share Capital of our Company increased from ₹13,90,00,000/- divided into 1,39,00,000 equity shares of ₹ 10/- each to ₹19,00,00,000/- divided into 1,90,00,000 equity shares of ₹ 10/- each vide passing of an Ordinary Resolution at the Extraordinary General Meeting held May 19, 2026.
June 16, 2026	Clause III (A) of our MOA was amended to reflect the insertion of a new sub-clause to the main objects, i.e. sub-clause (3), vide passing of a Special Resolution at the Extraordinary General Meeting held June 16, 2026. The same was approved by the Registrar of Companies, Central Processing Centre vide issue of "Certificate of Registration of the Special Resolution confirming Alteration of Object Clause(s)" dated July 02, 2026.

ADOPTING NEW ARTICLES OF ASSOCIATION OF THE COMPANY

Our Company has adopted a new set of Articles of Association at the Extraordinary General Meeting of our Company held on January 30, 2026.

MAJOR EVENTS AND MILESTONES IN THE HISTORY OF OUR COMPANY

FY 22-23  **Incorporation as a Private Company**

FY 23-24  **Commenced the Operation in the Factory for production of Jaggery powder**

FY 23-24  **Achieved a Turnover of over ₹ 2,500 Lakhs**

FY 24-25 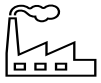 **Company commenced manufacturing Jaggery-based pre-mix products**

FY 24-25  **Achieved a Turnover of over ₹ 5,000 Lakhs**

FY 25-26  **Commenced the Operation in the Factory for production of Khandsari Sugar**

FY 25-26 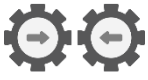 **Ventured into backward integration of producing Sugarcane Seeds ("Cane Seeds")**

FY 25-26  **Conversion from Private Limited to Public Limited**

OTHER DETAILS ABOUT OUR COMPANY

For details of our Company's activities, services, growth, technology, marketing strategy, competition and our customers, please refer chapter titled "Our Business", "Management's Discussion and Analysis of Financial Conditions and Results of Operations" and "Basis for Issue Price" beginning on page no. 147, 265 and 107, respectively of this Draft Red Herring Prospectus.

For details of our management and details of shareholding of our Promoters, please refer to chapter titled "Our Management" and "Capital Structure" beginning on page no. 200 and 78 respectively of this Draft Red Herring Prospectus.

SIGNIFICANT FINANCIAL AND STRATEGIC PARTNERSHIPS

As on the date of this Draft Red Herring Prospectus, our Company does not have any significant strategic or financial partners.

TIME/COST OVERRUN IN SETTING UP PROJECTS

As on the date of this Draft Red Herring Prospectus, there have been no time/cost overruns in setting up our projects.

LAUNCH OF KEY PRODUCTS OR SERVICES, ENTRY IN NEW GEOGRAPHIES OR EXIT FROM EXISTING MARKETS

For details of the launch of key products or services, entry into new geographies or exits from existing markets, see the heading titled "Major Events and Milestones in the history of our Company" in Chapter titled "Our Business" as mentioned above on page no. 151 of this Draft Red Herring Prospectus.

CAPACITY/ FACILITY CREATION, LOCATION OF PLANTS

Our Company completed the setup of the factory for production of Jaggery Powder during FY 2023-2024.

Our Company further purchased and installed machinery at its existing factory location for production of value added food products i.e. Jaggery based Pre-Mixes (Instant Rice Kheer, Jaggery Tea, Jaggery Laddoo, Jaggery Lapsi and Jaggery Coffee premixes) during FY 2024-2025.

Further, during FY 2025-2026 our Company completed the setup of expansion of its existing manufacturing facility for production of Khandsari Sugar in addition to its existing production capacity of Jaggery Powder.

For the details of our Facilities, Capacity and location of Plant, please refer the heading titled "Facility" and the heading titled "Property" under the chapter titled "Our Business" beginning on page no. 170 and 177 respectively of this Draft Red Herring Prospectus.

LOCK-OUT OR STRIKES

Our Company has not been involved in any labour disputes or disturbances including strikes and lockouts since its incorporation. As on the date of this Draft Red Herring Prospectus, our employees are not unionized.

INJUNCTION OR RESTRAINING ORDER

As on the date of this Draft Red Herring Prospectus, there are no injunctions/ restraining orders that have been passed against our Company.

KEY AWARDS, ACCREDITATIONS OR RECOGNITIONS

Our Company has not been bestowed any awards, accreditations or recognitions from any Government or Private Bodies.

DEFAULTS, RESCHEDULING OR RESTRUCTURING OF BORROWINGS WITH FINANCIAL INSTITUTIONS/ BANKS AND CONVERSION OF LOANS INTO EQUITY SHARES

As on the date of this Draft Red Herring Prospectus, there has been no default, rescheduling or restructuring of borrowings with financial institutions or banks. Furthermore, from the date of incorporation till the date of this Draft Red Herring Prospectus there have been no instances of conversion of loans into equity.

DETAILS REGARDING MATERIAL ACQUISITIONS OR DIVESTMENTS OF BUSINESS/ UNDERTAKINGS, MERGERS, AMALGAMATION, REVALUATION OF ASSETS, ETC.

Our Company has not made any material acquisitions or divestments of any business or undertakings, mergers, amalgamation or revaluation of assets since incorporation till the date of this Draft Red Herring Prospectus.

HOLDING COMPANY

As on the date of this Draft Red Herring Prospectus, our Company does not have a holding company.

JOINT VENTURES OF OUR COMPANY

As on the date of this Draft Red Herring Prospectus, our Company does not have any joint ventures.

SUBSIDIARIES OF OUR COMPANY

As on the date of this Draft Prospectus, our Company does not have any subsidiary(ies).

ASSOCIATES OF OUR COMPANY

As on the date of this Draft Red Herring Prospectus, our Company does not have any associates.

PENDING LITIGATION INVOLVING THE GROUP COMPANY

There is no pending litigation involving our Group Companies which has a material impact on our Company. *However, for details of outstanding litigation against our Company and Group Company, refer the chapter titled "Outstanding Litigation and Material Development" beginning on page no. 283 of this Draft Red Herring Prospectus.*

DETAILS OF SHAREHOLDER'S AGREEMENT

As on date of this Draft Red Herring Prospectus, there are no subsisting shareholders' agreements among our shareholders and/or shareholders vis-à-vis our Company to which our Company is a party or otherwise has notice of the same.

AGREEMENTS WITH KEY MANAGERIAL PERSONNEL, SENIOR MANAGEMENT, DIRECTORS, PROMOTER OR ANY OTHER EMPLOYEES

Neither our Promoters, nor any of the Directors, Key Managerial Personnel, Senior Management or employees of our Company have entered into an agreement, either by themselves or on behalf of any other person, with any shareholder or any other third party with regard to compensation or profit sharing in connection with the dealings of the securities of our Company.

GUARANTEES GIVEN TO THIRD PARTIES BY OUR PROMOTER OFFERING ITS SHARES

The proposed initial public issue comprises completely of fresh issue of shares.

OTHER MATERIAL AGREEMENTS NOT IN ORDINARY COURSE OF BUSINESS

Our Company has not entered into any other subsisting material agreement, including with strategic partners, joint venture partners or financial partners, other than in the ordinary course of business.

NON-COMPETE AGREEMENT

Our Company has not entered into any non-compete agreement as on the date of filing of this Draft Red Herring Prospectus.

COLLABORATION AGREEMENTS

Our Company does not have any collaboration agreement as on the date of this Draft Red Herring Prospectus.

AGREEMENTS RELATING TO PRIMARY AND SECONDARY TRANSACTIONS OF SECURITIES

Our Company does not have any agreement with any party in relation to any primary and secondary transactions of securities.

DETAILS OF AGREEMENT UNDER CLAUSE 5A OF PARAGRAPH A OF PART A OF SCHEDULE III OF SEBI (LODR) REGULATION 2015.

As on the date of this Draft Red Herring Prospectus, there are no agreements entered into by the shareholders, promoters, promoter group entities, related parties, directors, key managerial personnel, employees of our Company or our holding, subsidiary or associate company, among themselves or with our Company or with a third party, solely or jointly, which, either directly or indirectly or potentially or whose purpose and effect is to, impact the management or control of our Company or impose any restriction or create any liability upon our Company.

(Rest of the page is intentionally left blank)

OUR MANAGEMENT

BOARD OF DIRECTORS

As on the date of this Draft Red Herring Prospectus, our Company has five Directors, comprising one Managing Director (Woman Director), one Executive Director and three Independent Directors. The present composition of our Board and its committees is in accordance with the corporate governance requirements provided under the Companies Act 2013 and the SEBI (LODR) Regulations, 2015.

The following table sets forth details regarding our Board as on the date of this Draft Red Herring Prospectus:

Sr. No.	Name of the Directors	DIN	Designation
1	Dipali Dattatraya Kulkarni	09021630	Managing Director
2	Dattatray Kashinath Kulkarni	02745916	Executive Director cum Chief Financial Officer
3	Brijesh Jaynarayan Didvaniya	10192519	Independent Director
4	Mahesh Ashok Nannor	11685251	Independent Director
5	Sachin Balajirao Ramgirwar	11686334	Independent Director

The following table sets forth details regarding the Board of Directors as on the date of this Draft Red Herring Prospectus:

Sr. No.	Particulars	Details
1.	**Name**	**Dipali Dattatraya Kulkarni**
	Father's Name	Kulkarni Prabhakar Dattatraya
	Residential Address	Kakade Plot, Sambhaji Nagar, Osmanabad, Maharashtra- 413501, India
	Date of Birth	April 23, 1988
	Age	38 years
	Designation	Managing Director / Promoter
	DIN	09021630
	Occupation	Business
	Nationality	Indian
	Qualification	Higher Secondary Certificate, Maharashtra State Board of Secondary and Higher Secondary Education, Pune
	Brief Biography	Mrs. Dipali Dattatraya Kulkarni, aged 38 years, is one of the Promoters and the Managing Director of our Company. She has been associated with our Company since its inception. She has over five years of experience in Jaggery and Sugar Manufacturing Industry. In our Company, she oversees the operations of the Factory Premises, including production planning, quality control and implementation of business strategies aimed at improving operational efficiency and product quality. She was previously associated with Trimukhi Infra Private Limited, Shree Siddhivinayak Agritech Industries Limited, and Shree Siddhivinayak Foodtech Farmer Producer Company Limited as a Director for around two, five, and two years, respectively.
	Date of Appointment	June 24, 2022
	Date of Change in Designation	She was designated as the Managing Director of our Company w.e.f. May 19, 2026
	Term	5 years, commencing from May 19, 2026, to May 18, 2031
	Period of Directorship	She has been a Director of our Company since Incorporation
	Directorship in other companies	Nil

2.	**Name**	**Dattatray Kashinath Kulkarni**
	Father's Name	Late Kashinathrao Ramchandrarao Kulkarni
	Residential Address	Kakade Plot, Sambhaji Nagar, Osmanabad, Maharashtra- 413501, India
	Date of Birth	January 30, 1978
	Age	48 years
	Designation	Executive Director cum Chief Financial Officer / Promoter
	DIN	02745916
	Occupation	Business
	Nationality	Indian
	Qualification	Bachelor of Commerce, Dr. Babasaheb Ambedkar Marathwada University
	Brief Biography	Mr. Dattatray Kashinath Kulkarni, aged 48 years, is one of the Promoter and Executive Director cum CFO of our Company. He has been associated with the Board of our Company since its inception. He has over five years of experience in Jaggery and Sugar Manufacturing Industry. He oversees the manufacturing operations of our Company, including procurement of raw materials, quality control and implementation of business strategies aimed at improving financial planning and market penetration. He has been serving as the President of Bharatiya Janata Party (BJP) for Dharashiv District since June 02, 2025. He was previously associated with Shree Siddhivinayak Agritech Industries Limited as a CEO for a term of around four years and was associated as a Director with Shree Siddhivinayak Foodtech Farmer Producer Company Limited, and SSV Commercial Services and Infra Private Limited for around two years and six years respectively.
	Date of Appointment	June 24, 2022
	Date of Change in Designation	He was designated as an Executive Director cum Chief Financial Officer of our Company w.e.f. May 19, 2026
	Term	5 years, commencing from May 19, 2026, to May 18, 2031
	Period of Directorship	He has been a Director of our Company since Incorporation
	Directorship in other companies	Nil
3.	**Name**	**Brijesh Jaynarayan Didvaniya**
	Father's Name	Jaynarayan Mohanlal Didvaniya
	Residential Address	Near Naroba Mandir Basweshwar Nagar, Old Kautha Nanded, Cidco, Maharashtra - 431603, India
	Date of Birth	February 28, 1990
	Age	36 years
	Designation	Independent Director
	DIN	10192519
	Occupation	Business
	Nationality	Indian
	Qualification	1. Bachelor of Commerce, Swami Ramanand Teerth Marathwada University, Nanded 2. Master of Commerce, Swami Ramanand Teerth Marathwada University, Nanded 3. Bachelor of Law, Swami Ramanand Teerth Marathwada University, Nanded 4. Post Graduate Diploma in Taxation Laws, Swami Ramanand Teerth Marathwada University, Nanded
	Brief Biography	Mr. Brijesh Jaynarayan Didvaniya, aged 36 years, has been associated with our Company in the capacity of Independent Director since January 12, 2026. Mr. Brijesh has more than 10 years of experience in the field of accounting, corporate law and tax consultancy further he is a member of the Bar Council of Maharashtra and Goa since 2023. He is also associated with M.V.K. Agro Food Product Limited (SME listed) as an Independent Director since

		December 2023.
	Date of Appointment	January 12, 2026
	Date of Change in Designation	-
	Term	5 years, commencing from January 12, 2026, to January 11, 2031
	Period of Directorship	He has been a Director of our Company since January 12, 2026
	Directorship in other companies	M.V.K. Agro Food Product Limited – Independent Director
4.	**Name**	**Mahesh Ashok Nannor**
	Father's Name	Ashok Bhimaji Nannor
	Residential Address	Sr. No.24/1/5, Flat No. 608, Ganesh Pride, Ambegaon Bk (part) (n.v.), Pune, Maharashtra - 411046
	Date of Birth	October 13, 1992
	Age	33 years
	Designation	Independent Director
	DIN	11685251
	Occupation	Business
	Nationality	Indian
	Qualification	1. Company Secretary, Institute of Company Secretaries of India 2. Master of Commerce, Savitribai Phule Pune University
	Brief Biography	Mr. Mahesh Ashok Nannor, aged 33 years has been associated with our Company in the capacity of Independent Director since May 19, 2026. Mr. Mahesh is a Fellow Member of the Institute of Company Secretaries of India (ICSI). He has been practicing since 2020 through his proprietary firm, M/s. Mahesh Nannor & Associates.
	Date of Appointment	May 19, 2026
	Date of Change in Designation	-
	Term	5 years, commencing from May 19, 2026, to May 18, 2031
	Period of Directorship	He has been the Director of our Company since May 19, 2026
	Directorship in other companies	Nil
5.	**Name**	**Sachin Balajirao Ramgirwar**
	Father's Name	Balajirao Baburao Ramgirwar
	Residential Address	1-9-796, Anand Nagar Road, Near Income Tax Colony, Janardhan Nagar, Taroda BK., Nanded, Maharashtra-431605
	Date of Birth	June 06, 1980
	Age	46 years
	Designation	Independent Director
	DIN	11686334
	Occupation	Service
	Nationality	Indian
	Qualification	1. Bachelor of Arts, Dr. Babasaheb Ambedkar Marathwada University, Aurangabad 2. Master of Arts (History), Dr. Babasaheb Ambedkar Marathwada University, Aurangabad
	Brief Biography	Mr. Sachin Balajirao Ramgirwar aged 46 years has been associated with our Company in the capacity of Independent Director since May 19, 2026. Currently he is associated with M/s. Kabra and Maliwal, Chartered Accountants, as Audit Manager and has over 15 years of experience in the audit domain.
	Date of Appointment	May 19, 2026
	Date of Change in Designation	-
	Term	5 years, commencing from May 19, 2026, to May 18, 2031
	Period of Directorship	He has been the Director of our Company since May 19, 2026
	Directorship in other companies	Nil

FAMILY RELATIONSHIPS BETWEEN ANY OF THE DIRECTORS OR ANY OF THE DIRECTORS AND KEY MANAGERIAL PERSONNEL OR SENIOR MANAGEMENT

Except as mentioned below, none of the Directors of our Company are related to each other or with key managerial personnel or with senior management personnel within the meaning of Section 2(77) of the Companies Act, 2013.

Name of Director	Name of other Director / Key Managerial Personnel / Senior Management	Nature of Relationship
Dipali Dattatraya Kulkarni	Dattatray Kashinath Kulkarni	Spouse

CONFIRMATIONS:

a. None of the Directors of our Company were required to acquire any qualifying shares for appointment as director of our Company.

b. There are no arrangements or understanding between major shareholders, customers, suppliers, or others, pursuant to which any of the Directors were selected as a director or member of a senior management as on the date of this Draft Red Herring Prospectus.

c. Our Company has not executed any service contracts with its directors providing for benefits upon termination of their employment.

d. None of our Directors is or was a director of any listed company during the five years immediately preceding the date of this Draft Red Herring Prospectus, whose shares have been or were suspended from being traded on any stock exchange during the term of their directorship in such company.

e. None of our Directors is or was a director of any listed company which has been or was delisted from any stock exchange during the term of their directorship in such company.

f. None of the Directors are categorized as a willful defaulter or a fraudulent borrower, as defined under Regulation 2(1)(lll) of SEBI ICDR Regulations.

g. None of our Directors have been declared as fugitive economic offenders as defined in Regulation 2(1)(p) of the SEBI ICDR Regulations, nor have been declared as a 'fugitive economic offender' under Section 12 of the Fugitive Economic Offenders Act, 2018.

h. None of the Directors of our Company are debarred from accessing the capital market by SEBI.

i. None of the Directors has been or is involved as a promoter or director of any other Company which is debarred from accessing the capital market by SEBI.

j. No consideration, either in cash or shares or in any other form have been paid or agreed to be paid to any of our directors or to the firms, trusts or companies in which they have an interest in, by any person, either to induce him to become or to help him qualify as a director, or otherwise for services rendered by him or by the firm, trust or company in which he is interested, in connection with the promotion or formation of our Company.

k. In respect of the track record of the Directors, there have been no criminal cases filed or investigations being undertaken with regard to alleged commission of any offence by any of our directors and none of our directors have been charge-sheeted with serious crimes like murder, rape, forgery, economic offence etc.

l. None of the Directors or Key Managerial Personnel of our Company or any other person are nominated by any of the shareholders of our Company.

LOANS GIVEN / AVAILED BY DIRECTORS

Except as stated in the Note 28 titled "Statement of Related Party Transaction" of Annexure V- Notes to Restated Financial Information of the chapter titled "Restated Financial Statements" on page no. 248 of this Draft Red Herring Prospectus, no loans have been given or availed by the Directors of our Company.

BORROWING POWERS OF THE BOARD

The Shareholders of our Company vide the Special Resolution passed at an Extra-Ordinary General Meeting of our Company held on May 19, 2026**,** in accordance with the provisions of Section 180(1)(c) and other applicable provisions, if any, of the Companies Act, 2013 and other applicable provisions if any, has empowered the Board of Directors of our Company to borrow any sum or sums of money from time to time at its discretion for the purpose of the business of our Company, which together with the monies already borrowed by our Company [apart from temporary loans obtained from our Company's bankers in the ordinary course of business] may exceed at any time, the aggregate of the paid-up share capital of our Company and, Securities Premium Account and its free reserves that is to say, reserves not set apart for any specific purposes provided however, that the total amount so borrowed and remaining outstanding at any particular time shall not exceed ₹ 200 Crores (Rupees Two Hundred Crores Only).

POLICY ON DISCLOSURES AND INTERNAL PROCEDURE FOR PREVENTION OF INSIDER TRADING

The provisions of Regulation 9(1) of the SEBI (Prohibition of Insider Trading) Regulations, 2015 will be applicable to our Company immediately upon the listing of its Equity Shares. We shall comply with the requirements of the SEBI (Prohibition of Insider Trading) Regulations, 2015 on listing of Equity Shares on NSE Emerge. The Board of Directors at their meeting held on June 01, 2026, have approved and adopted the Code of Practices and Procedures for Fair Disclosure of Unpublished Price Sensitive Information Policy. The Company Secretary & Compliance Officer will be responsible for setting monitoring and adherence to the rules for the preservation of price sensitive information and the implementation of the Code of Conduct under the overall supervision of the Board.

POLICY FOR DETERMINATION OF MATERIALITY OF RELATED PARTY TRANSACTIONS AND ON DEALING WITH RELATED PARTY TRANSACTIONS

The provisions of the SEBI (Listing Obligations and Disclosure Requirements) Regulations, 2015, will be applicable to our Company immediately upon the listing of Equity Shares of our Company on NSE Emerge. We shall comply with the requirements of the SEBI (Listing Obligations and Disclosure Requirements) Regulations, 2015 on listing of Equity Shares on NSE Emerge. The Board of Directors at their meeting held on June 01, 2026, have approved and adopted the policy for determination of materiality of related party transactions and on dealing with related party transactions.

TERMS OF APPOINTMENT OF OUR EXECUTIVE DIRECTORS

Managing Director – Dipali Dattatraya Kulkarni

The Shareholders of our Company at the Extra-Ordinary General Meeting held on May 19, 2026, in accordance with the Sections 196 and 197 and 203 read with Schedule V of the Companies Act, 2013 and Companies (Appointment and Remuneration of Managerial Personnel) Rules, 2014 had appointed Mrs. Dipali Dattatraya Kulkarni as the Managing Director of our Company for a period of five years w.e.f. May 19, 2026, to May 18, 2031, on the following terms of remuneration:

Remuneration:

Mrs. Dipali Dattatraya Kulkarni shall be given a consolidated remuneration of ₹ 1,50,000/- per month, subject to annual increment as maybe decided between the Board of Directors and Mrs. Dipali Dattatraya Kulkarni.

Perquisites and allowances:

She shall be entitled to be reimbursed for the travelling expenses and any other expenses incurred by her for the benefit and development of our Company.

Executive Director – Dattatraya Kashinath Kulkarni

The Shareholders of our Company at the Extra-Ordinary General Meeting held on May 19, 2026, in accordance with the Sections 196 and 197 and 203 read with Schedule V of the Companies Act, 2013 and Companies (Appointment and Remuneration of Managerial Personnel) Rules, 2014 had appointed Mr. Dattatraya Kashinath Kulkarni as the Executive Director cum Chief Financial Officer of our Company for a period of five years w.e.f. May 19, 2026, to May 18, 2031, on the following terms of remuneration:

Remuneration:

Mr. Dattatraya Kashinath Kulkarni shall be given a consolidated remuneration of ₹ 1,50,000/- per month, subject to annual increment as maybe decided between the Board of Directors and Mr. Dattatraya Kashinath Kulkarni.

Perquisites and allowances:

He shall be entitled to be reimbursed for the travelling expenses and any other expenses incurred by him for the benefit and development of our Company.

PAYMENT OR BENEFIT TO DIRECTORS OF OUR COMPANY:

Details of the remuneration paid to our Directors in the Financial Year 2025-2026 are set forth below:

a. Remuneration to our Executive Directors:

Our Company during the Financial year 2025-2026, has not paid any remuneration to the Executive Directors of our Company.

b. Remuneration to our Non-Executive Director:

Our Company during the Financial year 2025-2026, has not paid any remuneration to the Non-Executive Directors and/or Independent Directors of our Company.

c. Siting Fee:

The Directors of our Company at present are not entitled to any sitting fee for attending the meeting of the Board of Directors or Committees thereof.

d. Payment or benefit to Independent Directors of our Company:

As per the terms of the appointment, the Independent Directors of our Company are not entitled to any remuneration, by whatever name called, like sitting fees, remuneration, commission on profit etc, except for reimbursement of expenses so incurred by the Director to attend the meeting of the Board or any Committee thereof.

e. Payment of Benefits (Non-Salary Related):

No amount or benefit has been paid or given within the two (2) years preceding the date of filing of this Draft Red Herring Prospectus or is intended to be paid or given to any of our directors except the remuneration for services rendered or any business transaction undertaken.

f. Contingent and Deferred Compensation Payable to Directors:

There is no contingent or deferred compensation payable to our directors, which does not form part of their remuneration.

g. Bonus or profit-sharing plan of the Directors:

Our Company does not have any bonus or profit-sharing plan for our Directors.

h. Remuneration paid to our Directors by our Subsidiary or Associate Company:

As on the date of this Draft Red Herring Prospectus, our Company does not have any subsidiaries or associates.

(The rest of the page is intentionally left blank)

THE DETAILS OF THE SHAREHOLDING OF OUR DIRECTORS AS ON THE DATE OF THIS DRAFT RED HERRING PROSPECTUS ARE AS FOLLOWS:

Name of the Director	No. of Equity Shares of Face Value ₹ 10/- each	Percentage of Pre-Issue Capital (%)	Percentage of Post-Issue Capital (%)
Dipali Dattatraya Kulkarni	96,25,000	78.57	51.07
Dattatray Kashinath Kulkarni	26,24,875	21.43	13.93
Brijesh Jaynarayan Didvaniya	-	-	-
Mahesh Ashok Nannor	-	-	-
Sachin Balajirao Ramgirwar	-	-	-
Total	**1,22,49,875**	**100.00**	**65.00**

INTEREST OF OUR DIRECTORS

All our Directors may be deemed to be interested to the extent of remuneration and reimbursement of expenses, if any, payable to them by our Company. *For further details, refer to the heading titled "Terms of Appointment of our Executive Directors" and "Payment or benefit to Directors of our Company", on page no. 204 and 205 respectively, of this Draft Red Herring Prospectus.*

Further, our Directors may be deemed to be interested to the extent of shareholding held by them, their relatives, their companies, firms and trusts, in which they are interested as directors, members, partners, trustees, beneficiaries and promoter and in any dividend distribution which may be made by our Company in the future.

Further, relatives of certain of our Directors are/were also shareholders of our Company and may be deemed to be interested to the extent of the payment of dividends declared on the Equity Shares held by them, if any. For the payments that are made by our Company to such relatives of the Directors see Note 28 titled "*Statement of Related Party Transaction*" of Annexure V- Notes to Restated Financial Information of the chapter titled "*Restated Financial Statements*" on page no. 248 of this Draft Red Herring Prospectus.

No sum has been paid or agreed to be paid to our Directors or to firms or companies in which they are members, in cash or shares or otherwise by any person either to induce them to become, or to qualify them as directors, or otherwise for services rendered by them by such firms or company, in connection with the promotion or formation of our Company.

Further, our Directors may be interested in our Company to the extent of loan given by them to our Company. For the details relating to the extent of loan taken by our Company from the Director kindly refer to Note 28 titled "Statement of Related Party Transaction" of Annexure V- Notes to Restated Financial Information of the chapter titled "Restated Financial Statements on page no. 248 of this Draft Red Herring Prospectus.

Please refer to "Restated Financial Information – Annexure V, Related party disclosures as required under AS-18" on page no. 248 of this Draft Red Herring Prospectus.

INTEREST IN SIMILAR BUSINESS/ VENTURES

Except as mentioned herein below none of the Directors of our Company are not involved or interested as a promoter, director, member, partner, proprietor and/or trustee of any other entity, that is in similar line of activity or business as that of our Company.

Name of the Director	Name of the Company where the said Director is interested	Nature of Interest	Business Activity of the said Company
Brijesh Jaynarayan Didvaniya	M.V.K. Agro Food Product Limited	Independent Director	Manufacturing of Sugar

For risk associated w.r.t this kindly refer risk factor 25 under the section titled "Risk Factor" on page no. 41 of this Draft Red Herring Prospectus.

INTEREST IN PROPERTY OF THE COMPANY

Except as stated in the heading titled "Properties" under the chapter titled "Our Business", beginning on page 177 of this Draft Red Herring Prospectus, none of our Directors have interest in any property acquired, proposed to be acquired or leased to our Company. Further, our Management is of the opinion that there is no conflict between our Directors and our Company w.r.t above stated leased properties.

INTEREST IN PROMOTION/ FORMATION OF THE COMPANY

Except Mrs. Dipali Dattatraya Kulkarni and Mr. Dattatray Kashinath Kulkarni, who are also the promoters of our Company, none of the Directors are interested in the promotion/ formation of our Company.

LITIGATION INVOLVING OUR DIRECTORS

For details relating to litigation involving our Directors, kindly refer to the heading titled "Litigation Involving our Directors" in the chapter titled "Outstanding Litigation and Material Development" on the page no. 287 of this Draft Red Herring Prospectus.

NUMBER OF BUSINESS CORRESPONDENTS AND WHETHER ANY BUSINESS CORRESPONDENT IS RELATED TO DIRECTORS.

Our Company has not appointed any business correspondent.

NAME OF ANY OF THE DIRECTORS APPEARING IN THE LIST OF DIRECTORS OF STRUCK-OFF COMPANIES BY ROC/ MCA.

Mr. Dattatray Kashinath Kulkarni was previously associated with Kalyansagar Agro & Milk Products Private Limited as a Director. The said Company was Struck-off by ROC, Pune under section 248 (1) of the Companies Act, 2013, vide public notice no. ROCP/STK/2017/7120 dated April 07, 2017.

Pursuant to the said notice Mr. Dattatray Kashinath Kulkarni was disqualified for a period of five years i.e from November 01, 2016, to October 31, 2021.

Except as provided above, none of the Directors of our Company appear in the list of Directors of Companies Struck Off by the ROC/MCA.

For risk associated w.r.t this kindly refer risk factor 11 under the section titled "Risk Factor" on page no. 32 of this Draft Red Herring Prospectus.

DETAILS OF DIRECTORS DISQUALIFIED UNDER SECTION 164(2) OF THE COMPANIES ACT, 2013

As on the date of this Draft Red Herring Prospectus, none of the Directors of our Company are disqualified under Section 164(2) of the Companies Act, 2013.

CHANGES IN OUR BOARD IN THE LAST THREE YEARS

Changes in our Board of Directors during the three years immediately preceding the date of this Draft Red Herring Prospectus are set forth below:

Name of Director	Date of Event	Nature of Event	Reason
Brijesh Jaynarayan Didvaniya	January 12, 2026	Appointment as Independent Director	Appointment as an Independent Director at the Extra-Ordinary General Meeting held on January 12, 2026.
Dipali Dattatraya Kulkarni	May 19, 2026	Change in Designation	Mrs. Dipali Dattatraya Kulkarni, who was serving as a Director of our Company, was appointed as the Managing Director at the Extra-Ordinary General Meeting held on May 19, 2026.
Dattatray Kashinath Kulkarni	May 19, 2026	Change in Designation	Mr. Dattatray Kashinath Kulkarni, who was serving as Director of our Company, was appointed as an Executive Director cum Chief Financial Officer at the Extra-Ordinary General Meeting held on May 19, 2026.
Mahesh Ashok Nannor	May 19, 2026	Appointment as Independent Director	Appointment as an Independent Director at the Extra-Ordinary General Meeting held on May 19, 2026.
Sachin Balajirao Ramgirwar	May 19, 2026	Appointment as Independent Director	Appointment as an Independent Director at the Extra-Ordinary General Meeting held on May 19, 2026.

MANAGEMENT ORGANIZATION STRUCTURE

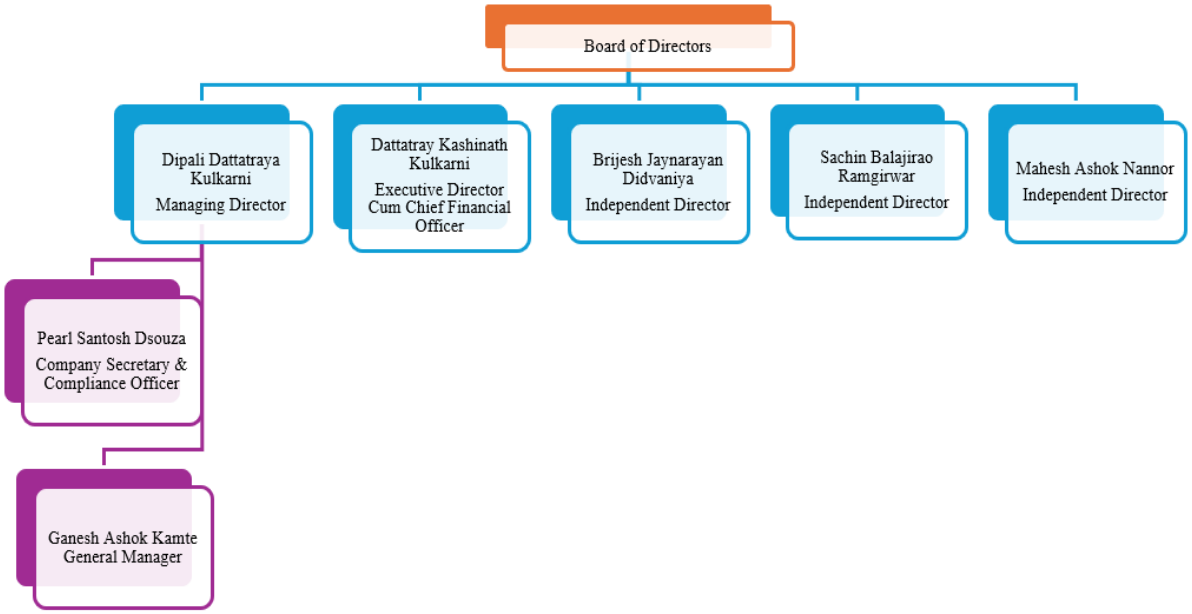

CORPORATE GOVERNANCE

In addition to the applicable provisions of the Companies Act, 2013 with respect to the Corporate Governance, provisions of the SEBI LODR Regulations will be applicable to our Company immediately upon the listing of Equity Shares on the Stock Exchange. As on date of this Draft Red Herring Prospectus, as our Company is coming with an issue in terms of Chapter IX of the SEBI (ICDR) Regulations, 2018 as amended from time to time, the requirement specified in regulations 17, 17A, 18, 19, 20, 21, 22, 23, 24, 24A, 25, 26, 26A, 27 and clauses (b) to (i) and (t) of sub-regulation (2) of regulation 46 and para C, D and E of Schedule V is not applicable to our Company, although we require to comply with requirement of the Companies Act, 2013 wherever applicable. Our Company has complied with the corporate governance requirement, particularly in relation to appointment of independent directors including a woman director on our Board, constitution of an Audit Committee, Nomination and Remuneration Committee and Stakeholders Relationship Committee.

Our Company stands committed to good Corporate Governance practices based on principles such as accountability, transparency in dealing with our stakeholders, emphasis on communication and transparent report.

Our Board functions either on its own or through committees constituted thereof, to oversee specific operational areas. As on the date of this Draft Red Herring Prospectus, our Company has five Directors, comprising one Managing Director (Woman Director), one Executive Director, and three Independent Directors.

COMMITTEES OF OUR BOARD

Our Board has constituted the following committees including those for compliance with Corporate Governance requirements:

A) Audit Committee
B) Stakeholders' Relationship Committee
C) Nomination and Remuneration Committee

A) Audit Committee

As per Section 177 of the Companies Act 2013, the Board of Directors of every listed company and such other class or classes of companies, as may be prescribed, shall constitute an Audit Committee. The Audit Committee shall consist of a minimum of three directors with independent directors forming a majority: Provided that majority of members of Audit Committee including its Chairperson shall be persons with ability to read and understand, the financial statement.

Our Audit Committee was constituted on June 01, 2026, pursuant to a Board Resolution. As on the date of this Draft Red Herring Prospectus, the Audit Committee comprises:

Name of the Directors	Designation in Board	Designation in Committee
Brijesh Jaynarayan Didvaniya	Independent Director	Chairman and Member
Dipali Dattatraya Kulkarni	Managing Director	Member
Sachin Balajirao Ramgirwar	Independent Director	Member

The Company Secretary and Compliance Officer of our Company shall act as the Secretary of the Audit Committee.

Set forth below are the scope, functions and the terms of reference of our Audit Committee:

Powers of the Audit Committee:

The Audit Committee shall have powers, including the following:

a) To investigate any activity within its terms of reference;
b) To seek information from any employee;
c) To obtain outside legal or other professional advice;
d) To secure attendance of outsiders with relevant expertise, if it considers necessary as may be prescribed under the Companies Act, 2013 (together with the rules thereunder) and SEBI Listing Regulations; and
e) To have full access to information contained in records of Company.
f) Such other powers as may be prescribed under the Companies Act and SEBI Listing Regulations.

Role of Audit Committee

The role of the Audit Committee shall include the following:

1) Overseeing the Company's financial reporting process and disclosure of its financial information to ensure that its financial statements are correct, sufficient and credible;
2) Recommending to the Board for the appointment, re-appointment, replacement, remuneration and terms of appointment of the statutory auditors of the Company;
3) Approving payments to the statutory auditors for any other services rendered by the statutory auditors;
4) Reviewing, with the management, the annual financial statements and auditor's report thereon before submission to the Board for approval, with particular reference to:
    a. Matters required to be included in the Director's Responsibility Statement to be included in the Board's report in terms of clause (c) of sub-section 3 of Section 134 of the Companies Act;
    b. Changes, if any, in accounting policies and practices and reasons for the same;
    c. Major accounting entries involving estimates based on the exercise of judgment by management;
    d. Significant adjustments made in the financial statements arising out of audit findings;
    e. Compliance with listing and other legal requirements relating to financial statements;
    f. Disclosure of any related party transactions; and
    g. Qualifications and modified opinions in the draft audit report.
5) Reviewing, with the management, Quarterly/ half-yearly and annual financial statements before submission to the Board for approval;
6) Reviewing, with the management, the statement of uses/ application of funds raised through an issue (public issue, rights issue, preferential issue, etc.), the statement of funds utilized for purposes other than those stated in the issue document/ prospectus/ notice and the report submitted by the monitoring agency monitoring the utilization of proceeds of a public or rights issue, and making appropriate recommendations to the Board to take up steps in this matter. This also includes monitoring the use/application of the funds raised through the proposed initial public offer by the Company;
7) Reviewing and monitoring the statutory auditor's independence and performance, and effectiveness of audit process;
8) Approval or any subsequent modifications of transactions of the Company with related parties and omnibus approval for related party transactions proposed to be entered into by the Company subject to such conditions as may be prescribed;
9) Scrutiny of inter-corporate loans and investments;
10) Valuation of undertakings or assets of the Company, wherever it is necessary;
11) Evaluation of internal financial controls and risk management systems;
12) Reviewing, with the management, the performance of statutory and internal auditors, and adequacy of the internal control systems;

13) Reviewing the adequacy of internal audit function if any, including the structure of the internal audit department, staffing and seniority of the official heading the department, reporting structure coverage and frequency of internal audit;
14) Discussing with internal auditors on any significant findings and follow up thereon;
15) Reviewing the findings of any internal investigations by the internal auditors into matters where there is suspected fraud or irregularity or a failure of internal control systems of a material nature and reporting the matter to the Board;
16) Discussing with statutory auditors before the audit commences, about the nature and scope of audit as well as post-audit discussion to ascertain any area of concern;
17) Looking into the reasons for substantial defaults in the payment to the depositors, debenture holders, shareholders (in case of non-payment of declared dividends) and creditors;
18) Reviewing the functioning of the whistle blower mechanism;
19) Approving the appointment of the chief financial officer or any other person heading the finance function or discharging that function after assessing the qualifications, experience and background, etc. of the candidate;
20) Reviewing the utilization of loans and/ or advances from/investment by the holding company in any subsidiary exceeding rupees 100 crore or 10% of the asset size of the subsidiary, whichever is lower including existing loans / advances / investments existing as on the date of coming into force of this provision;
21) Considering and commenting on the rationale, cost-benefits and impact of schemes involving merger, demerger, amalgamation etc., on the Company and its shareholders;
22) Such roles as may be delegated by the Board and/or prescribed under the Companies Act, 2013 and SEBI Listing Regulations or other applicable law.

The Audit Committee shall mandatorily review the following information:

1) management discussion and analysis of financial condition and results of operations;
2) management letters / letters of internal control weaknesses issued by the statutory auditors;
3) internal audit reports relating to internal control weaknesses;
4) the appointment, removal and terms of remuneration of the chief internal auditor shall be subject to review by the audit committee; and
5) statement of deviations:
   a) Quarterly/ Half-yearly statement of deviation(s) including report of monitoring agency, if applicable, submitted to stock exchange(s) in terms of Regulation 32(1) of the SEBI ICDR Regulations;
   b) Annual statement of funds utilized for purposes other than those stated in the issue document/prospectus/notice in terms of Regulation 32(7) of the SEBI ICDR Regulations.

Meetings of the Audit Committee

Audit committee shall meet at least four times a year with maximum interval of 120 days between 2 consecutive meetings.

The quorum for a meeting of the Audit Committee shall be either two members or one-third of the members of the Audit Committee, whichever is greater, with at least two independent directors present.

The Chairperson of the Audit Committee shall be present at the annual general meeting of the Company to answer shareholder queries.

The Audit Committee may invite such executives, as it considers appropriate (and particularly the head of the finance function) to be present at the meetings of the committee, but on occasions it may also meet without the presence of any executives of the Company.

B) Stakeholders' Relationship Committee:

As per Section 178 (6) of the Companies Act, 2013, the Board of Directors of a Company which consists of more than one thousand shareholders, debenture-holders, deposit-holders, and any other security holders at any time during a financial year shall constitute a Stakeholders Relationship Committee consisting of a chairperson who shall be a non-executive director and such other members as may be decided by the Board.

Our Stakeholder's Relationship Committee was constituted pursuant to a resolution of our Board Meeting dated June 01, 2026. As on date of this Draft Red Herring Prospectus, the Stakeholders' Relationship Committee comprises:

Name of the Directors	Designation in Board	Designation in Committee
Sachin Balajirao Ramgirwar	Independent Director	Chairman and Member
Brijesh Jaynarayan Didvaniya	Independent Director	Member
Dipali Dattatraya Kulkarni	Managing Director	Member

Set forth below are the scope, functions and the terms of reference of our Stakeholders Relationship Committee:

Role of Stakeholders' Relationship Committee

The Stakeholders Relationship Committee shall be responsible for, among other things, as may be required under applicable law, the following:

1. To consider and resolve grievances of security holders of the Company, including complaints related to transfer/transmission of shares, non-receipt of annual report, non-receipt of declared dividends, issue of new/duplicate certificates, general meetings, etc.;
2. To review of measures taken for effective exercise of voting rights by shareholders;
3. To review of adherence to the service standards adopted by the Company in respect of various services being rendered by the Registrar and Share Transfer Agent;
4. To review various measures and initiatives taken by the Company for reducing the quantum of unclaimed dividends and ensuring timely receipt of dividend warrants/annual reports/ statutory notices by the shareholders of the Company;
5. Such other functions / roles as may be delegated to the Committee by the Board and/or as may be required under applicable laws.

Meetings of the Stakeholders' Relationship Committee

Stakeholders' Relationship Committee shall meet at least once a year.

The quorum of the meeting shall be one third of the total strength of the committee or two members, whichever is higher.

The Chairperson of the Stakeholders Relationship Committee shall be present at general meetings of the Company, or in the absence of the Chairperson, any other member of the Stakeholders Relationship Committee authorized by the Chairperson in this behalf.

C) Nomination and Remuneration Committee

As per Section 178 of the Companies Act, 2013, the Board of Directors of every listed company and such other class or classes of companies, as may be prescribed shall constitute the Nomination and Remuneration Committee consisting of three or more non-executive directors out of which not less than one-half shall be independent directors: Provided that the chairperson of the company (whether executive or non-executive) may be appointed as a member of the Nomination and Remuneration Committee but shall not chair such Committee.

Our Nomination and Remuneration Committee was constituted on June 01, 2026, pursuant to a Board Resolution. As on date of this Draft Red Herring Prospectus, the Nomination and Remuneration Committee comprises:

Name of the Directors	Designation in Board	Designation in Committee
Sachin Balajirao Ramgirwar	Independent Director	Chairman and Member
Brijesh Jaynarayan Didvaniya	Independent Director	Member
Mahesh Ashok Nannor	Independent Director	Member

Set forth below are the scope, functions and the terms of reference of our Nomination and Remuneration Committee:

1) Formulating the criteria for determining qualifications, positive attributes and independence of a director and recommend to the Board a policy relating to the remuneration of the directors, key managerial personnel and other employees;
2) Evaluating the balance of skills, knowledge and experience on the Board and on the basis of such evaluation, prepare a description of the role and capabilities required of an independent director. The person recommended to the board of directors of the Company for appointment as an independent director shall have the capabilities identified in such description. For the purpose of identifying suitable candidates, the Committee may:
   a) use the services of external agencies, if required;
   b) consider candidates from a wide range of backgrounds, having due regard to diversity; and
   c) consider the time commitments of the candidates.

3) Formulation of criteria for evaluation of the performance of independent directors and the Board;
4) Specify the manner for effective evaluation of performance of Board, its committees and individual directors to be carried out either by the Board, by the Nomination and Remuneration Committee or by an independent external agency and review its implementation and compliance;
5) Devising a policy on diversity of the Board;
6) Identifying persons, who are qualified to become directors or who may be appointed in senior management in accordance with the criteria laid down, recommending to the Board their appointment and removal;
7) Determining whether to extend or continue the term of appointment of the independent director, on the basis of the report of performance evaluation of independent directors;
8) Recommending to the Board, all remuneration, in whatever form, payable to senior management; and
9) Such other functions / roles as may be delegated to the Committee by the Board and/or as may be required under applicable laws.

Meetings of the Nomination and Remuneration Committee

The Nomination and Remuneration Committee shall meet at least once a year.

The quorum for a meeting of the Nomination and Remuneration Committee shall be either two members or one-third of the members of the Nomination and Remuneration Committee, whichever is greater, with at least one independent director present.

The Chairperson of the Nomination and Remuneration Committee shall be present at general meetings of the Company to answer the shareholder's queries, however, it shall be up to the chairperson to decide who shall answer the queries. In the absence of the Chairperson, any other member of the Nomination and Remuneration Committee may be authorised by the Chairperson in this behalf.

KEY MANAGERIAL PERSONNEL

The details of the Key Managerial Personnel as on the date of this Draft Red Herring Prospectus are set out below:

Name	Designation
Dipali Dattatraya Kulkarni	Managing Director
Dattatray Kashinath Kulkarni	Executive Director cum Chief Financial Officer
Pearl Santosh Dsouza	Company Secretary & Compliance Officer

PROFILE OF KEY MANAGERIAL PERSONNEL

For details relating to Managing Director and Executive Director cum Chief Financial Officer refer to the heading titled "Board of Directors" under the chapter titled "Our Management" on page no. 200 of this Draft Red Herring Prospectus.

Sr. No.	Particulars	Details
1.	**Name**	**Pearl Santosh Dsouza**
	Designation	Company Secretary & Compliance Officer
	Age	30 years
	Membership No.	ACS - 60092
	Date of Joining	May 04, 2026
	Qualification	1. Bachelor of Commerce, Savitribai Phule Pune University 2. Company Secretary, the Institute of Company Secretaries of India 3. Bachelor of Law, Savitribai Phule Pune University
	Term of Office	Not Applicable
	Experience	Ms. Pearl Santosh Dsouza, aged 30 years, is the Company Secretary and Compliance Officer of our Company and has been associated with our Company since May 04, 2026. She is responsible to oversee the Secretarial Compliances of our Company. She brings with her around 6 years of experience in handling secretarial and compliance-related matters.
	Details of Previous Employment	1. Steam Equipments Limited 2. Siddhanath Sugar Mills Limited 3. Kancheshwar Sugar Limited

[For the risk associated *w.r.t dependency on our KMPs, kindly refer the risk factor 39 under the section titled "Risk Factor" on page no. 47 of this Draft Red Herring Prospectus.]*

SERVICE CONTRACTS WITH KEY MANAGERIAL PERSONNEL

Our Key Managerial Personnel have not entered into any service contracts with our Company which provide for any benefits upon termination/ retirement of their employment in our Company.

LOANS GIVEN / AVAILED BY KEY MANAGERIAL PERSONNEL

Except as stated in Note 28 titled "Statement of Related Party Transaction" of Annexure V- Notes to Restated Financial Information of the chapter titled "Restated Financial Statements" on page 248 of this Draft Red Herring Prospectus, no loans have been given or availed by the Key Managerial Personnel of our Company.

RELATIONSHIP AMONG KEY MANAGERIAL PERSONNEL AND AMONG KEY MANAGEMENT PERSONNEL AND SENIOR MANAGERIAL PERSONNEL

Except as mentioned below, none of the Key managerial personnel of our Company are related to each other or with senior management personnel within the meaning of Section 2(77) of the Companies Act, 2013.

Name of KMP	Name of other Key Managerial Personnel / Senior Management	Nature of Relationship
Dipali Dattatraya Kulkarni	Dattatray Kashinath Kulkarni	Spouse

ARRANGEMENT OR UNDERSTANDING WITH MAJOR SHAREHOLDERS, CUSTOMERS, SUPPLIERS OR OTHERS, PURSUANT TO WHICH ANY OF THE KEY MANAGERIAL PERSONNEL WAS SELECTED AS A KEY MANAGERIAL PERSONNEL

There are no arrangements or understanding between major shareholders, customers, suppliers, or others, pursuant to which any of the Key Managerial Personnel were selected as Key Managerial Personnel as on the date of this Draft Red Herring Prospectus.

REMUNERATION/ COMPENSATION PAID TO OUR KEY MANAGERIAL PERSONNEL

As the Key Managerial Personnel of our Company were appointed in the Financial year 2026-2027, no salary was applicable or paid to them during the Financial year 2025-26.

BONUS AND/ OR PROFIT-SHARING PLAN FOR THE KEY MANAGERIAL PERSONNEL

Our Company does not have any bonus and/ or profit sharing plan for the Key Managerial Personnel. However, our Company makes bonus payments to the employees based on their performances, which is as per their terms of appointment.

CONTINGENT AND DEFERRED COMPENSATION PAYABLE TO KEY MANAGERIAL PERSONNEL

There is no contingent or deferred compensation payable to Key Managerial Personnel, which does not form part of their remuneration.

STATUS OF KEY MANAGEMENT PERSONNEL IN OUR COMPANY

All our Key Managerial Personnel are permanent employees of our Company.

SHAREHOLDING OF KEY MANAGEMENT PERSONNEL IN OUR COMPANY

The details of the shareholding of our Key Managerial Personnel as on the date of this Draft Red Herring Prospectus are as follows:

Name of the KMP	Designation	No. of Equity Shares of Face Value ₹ 10/- each	Percentage of Pre-Issue Capital (%)	Percentage of Post-Issue Capital (%)
Dipali Dattatraya Kulkarni	Managing Director	96,25,000	78.57	51.07
Dattatray Kashinath Kulkarni	Executive Director Cum Chief Financial Officer	26,24,875	21.43	13.93
Pearl Santosh Dsouza	Company Secretary & Compliance Officer	Nil	-	-
	Total	**1,22,49,875**	**100.00**	**65.00**

CHANGES IN COMPANY'S KEY MANAGERIAL PERSONNEL DURING THE LAST THREE (3) YEARS

Changes in our Key Management Personnel during the three years immediately preceding the date of this Draft Red Herring Prospectus are set forth below:

Name of KMP	Event	Date of Appointment/ Change
Dipali Dattatraya Kulkarni	Appointment as Managing Director	May 19, 2026
Dattatray Kashinath Kulkarni	Appointment as Chief Financial Officer	May 19, 2026
Pearl Santosh Dsouza	Appointment as Company Secretary and Compliance Officer	May 04, 2026

ATTRITION OF KEY MANAGERIAL PERSONNEL

Since the date of appointment of the Key Management Personnel there are no changes among them and hence the attrition rate cannot be determined.

PAYMENT OF BENEFITS TO KMPs OF OUR COMPANY (NON-SALARY RELATED)

No non-salary related amount or benefit has been paid or given to any Key Management Personnel of our Company within the two years preceding the date of filing of this Draft Red Herring Prospectus or is intended to be paid or given, other than in the ordinary course, of their employment or any business transaction undertaken with them.

INTEREST OF KEY MANAGEMENT PERSONNEL

All our KMPs may be deemed to be interested to the extent of remuneration and reimbursement of expenses, if any, payable to them by our Company.

Further, our KMPs may be deemed to be interested to the extent of shareholding held by them, their relatives, their companies, firms and trusts, in which they are interested as directors, members, partners, trustees, beneficiaries and promoter and in any dividend distribution which may be made by our Company in the future.

Further, relatives of certain of our KMPs are/were also shareholders of our Company and may be deemed to be interested to the extent of the payment of dividends declared on the Equity Shares held by them, if any. For the payments that are made by our Company to such relatives of the Directors see *Note 28 titled "Statement of Related Party Transaction" of Annexure V- Notes to Restated Financial Information of the chapter titled "Restated Financial Statements" on page 248 of this Draft Red Herring Prospectus.*

Except as stated in the heading titled "Properties" under the chapter titled "Our Business", on page no. 177 of this Draft Red Herring Prospectus, none of our KMPs have interest in any property acquired, proposed to be acquired or leased to our Company. Further, our Management is of the opinion that there is no conflict between our KMPs and our Company w.r.t above stated leased properties.

Further, our KMPs may be interested in our Company to the extent of loan given by them to our Company. For the details relating to the extent of loan taken by our Company from the KMPs kindly refer to Note 28 titled "Statement of Related Party Transaction" of Annexure V- Notes to Restated Financial Information of the chapter titled "Restated Financial Statements on page no. 248 of this Draft Red Herring Prospectus.

Please refer to "Restated Financial Information – Annexure V, Related party disclosures as required under AS-18" on page 248 of this Draft Red Herring Prospectus.

For risk associated w.r.t this kindly refer risk factor 26 under the section titled "Risk Factor" on page no. 42 of this Draft Red Herring Prospectus.

NUMBER OF BUSINESS CORRESPONDENTS AND WHETHER ANY BUSINESS CORRESPONDENT IS RELATED TO KMPS.

Our Company has not appointed any business correspondent.

SENIOR MANAGERIAL PERSONNEL

The details of the Senior Managerial Personnel as on the date of this Draft Red Herring Prospectus are set out below:

Name	Designation
Ganesh Ashok Kamte	General Manager

PROFILE OF SENIOR MANAGERIAL PERSONNEL

Sr. No.	Particulars	Details
1.	**Name**	**Ganesh Ashok Kamte**
	Designation	General Manager
	Age	38 years
	Date of Joining	April 01, 2023
	Qualification	1. Bachelor of Commerce, Dr. Babasaheb Ambedkar Marathwada University 2. Master of Commerce, Dr. Babasaheb Ambedkar Marathwada University
	Term of Office	Not Applicable
	Experience	Mr. Ganesh Ashok Kamte, aged 38 years, has been associated with our Company in the capacity of General Manager since April 01, 2023. He is responsible for overall management, operations, administration of the manufacturing facility of our Company. He has over decade of experience in the field of finance, management and over five years of experience in the field of Sugar and Jaggery manufacturing.
	Details of Previous Employment	1. Shree Siddhivinayak Multi State Co-operative Credit Society Ltd. 2. Shree Siddhivinayak Agritech Limited

For the risk associated w.r.t dependency on our SMPs, kindly refer the risk factor 39 under the section titled "Risk Factor" on page no. 47 of this Draft Red Herring Prospectus.

SERVICE CONTRACTS WITH SENIOR MANAGERIAL PERSONNEL

Our Senior Managerial Personnel have not entered into any service contracts with our Company which provide for any benefits upon termination/ retirement of their employment in our Company.

LOANS GIVEN / AVAILED BY SENIOR MANAGERIAL PERSONNEL

Except as stated in Note 28 titled "Statement of Related Party Transaction" of Annexure V- Notes to Restated Financial Information of the chapter titled "Restated Financial Statements" on page 248 of this Draft Red Herring Prospectus, no loans have been given or availed by the Senior Managerial Personnel of our Company.

RELATIONSHIP AMONG SENIOR MANAGERIAL PERSONNEL AND AMONG SENIOR MANAGEMENT PERSONNEL AND KEY MANAGERIAL PERSONNEL

None of the Senior Managerial Personnel of our Company are related to each other and/or to the Key Managerial Personnel of our Company within the meaning of Section 2(77) of the Companies Act, 2013.

ARRANGEMENT OR UNDERSTANDING WITH MAJOR SHAREHOLDERS, CUSTOMERS, SUPPLIERS OR OTHERS PURSUANT TO WHICH ANY OF THE SENIOR MANAGERIAL PERSONNEL WAS SELECTED AS A SENIOR MANAGERIAL PERSONNEL

There are no arrangements or understanding between major shareholders, customers, suppliers, or others, pursuant to which any of the Senior Managerial Personnel were selected as Senior Managerial Personnel as on the date of this Draft Red Herring Prospectus.

REMUNERATION/ COMPENSATION PAID TO OUR SENIOR MANAGERIAL PERSONNEL

Details of remuneration paid to Senior Managerial Personnel in previous year (FY 2025-26) is as follows:

Sr. No.	Name of Senior Managerial Personnel	Details	Amount in Lakhs
1	Ganesh Ashok Kamte	Salary	7.39

BONUS AND/ OR PROFIT-SHARING PLAN FOR THE SENIOR MANAGERIAL PERSONNEL

Our Company does not have any bonus and/ or profit sharing plan for the Senior Managerial Personnel. However, our Company makes bonus payments to the employees based on their performances, which is as per their terms of appointment.

CONTINGENT AND DEFERRED COMPENSATION PAYABLE TO SENIOR MANAGERIAL PERSONNEL

There is no contingent or deferred compensation payable to Senior Managerial Personnel, which does not form part of their remuneration.

STATUS OF SENIOR MANAGERIAL PERSONNEL IN OUR COMPANY

Our Senior Managerial Personnel is a permanent employee of our Company.

SHAREHOLDING OF SENIOR MANAGERIAL PERSONNEL IN OUR COMPANY

None of our Senior Managerial Personnel hold any Equity Shares in our Company as on the date of this Draft Red Herring Prospectus.

CHANGES IN OUR COMPANY'S SENIOR MANAGERIAL PERSONNEL DURING THE LAST THREE (3) YEARS

Name of SMP	Event	Date of Appointment/ Change
Ganesh Ashok Kamte	Appointment as General Manager	April 01, 2023

ATTRITION OF SENIOR MANAGERIAL PERSONNEL

Since the date of appointment of the Senior Management Personnel there are no changes among them and hence the attrition rate cannot be determined.

PAYMENT OF BENEFITS TO SMPs OF OUR COMPANY (NON-SALARY RELATED)

No non-salary related amount or benefit has been paid or given to any Senior Management Personnel of our Company within the two years preceding the date of filing of this Draft Red Herring Prospectus or is intended to be paid or given, other than in the ordinary course, of their employment or any business transaction undertaken with them.

INTEREST OF SENIOR MANAGERIAL PERSONNEL

None of our Senior Management Personnel has any interest in our Company except to the extent of their remuneration, benefits, reimbursement of expenses incurred by them in the ordinary course of business and/or any business transaction undertaken with them.

For risk associated w.r.t this kindly refer risk factor 26 under the section titled "Risk Factor" on page no. 42 of this Draft Red Herring Prospectus.

EMPLOYEE SHARE PURCHASE AND EMPLOYEE STOCK OPTION PLAN

Our Company does not have an employee stock option scheme as on the date of this Draft Red Herring Prospectus.

(Rest of the page is intentionally left blank)

OUR PROMOTER AND PROMOTER GROUP

OUR PROMOTER

As on the date of this Draft Red Herring Prospectus, the Promoters of our Company are Mrs. Dipali Dattatraya Kulkarni and Mr. Dattatray Kashinath Kulkarni.

As on the date of this Draft Red Herring Prospectus, Mrs. Dipali Dattatraya Kulkarni holds 96,25,000 Equity Shares & Mr. Dattatray Kashinath Kulkarni holds 26,24,875 Equity Shares, equivalent to almost 100% of the Pre-Issue Equity Share capital and representing equivalent to almost 65% of the Post-Issue Equity Share capital of our Company.

For further details, see the heading titled "Shareholding of our Promoters and Promoter Group" under the chapter titled "Capital Structure" beginning on page 85 of this Draft Red Herring Prospectus.

Our Promoter and Promoter Group will continue to hold majority of our post- issue paid-up equity share capital of our Company. *For risk associated w.r.t this kindly refer risk factor 48 under the section titled "Risk Factor" on page no. 49 of this Draft Red Herring Prospectus.*

BRIEF PROFILE OF OUR PROMOTERS ARE AS FOLLOWS



DIPALI DATTATRAYA KULKARNI	
Educational Qualification	Higher Secondary Certificate, Maharashtra State Board of Secondary and Higher Secondary Education, Pune
Designation	Managing Director
Date of Birth	April 23, 1988
Age	38 years
Personal Address	Kakade Plot, Sambhaji Nagar, Osmanabad, Maharashtra - 413501, India
Experience in the Business	She has over five years of experience in this Business
Occupation	Business
Permanent Account Number	HHEPK9167E
No. of Equity Shares held in Company [% of Shareholding (Pre-Issue)]	96,25,000 Equity Shares [78.57%]
DIN	09021630
Brief Biography	Mrs. Dipali Dattatraya Kulkarni, aged 38 years, is one of the Promoters and the Managing Director of our Company. She has been associated with our Company since its inception. She has over five years of experience in Jaggery and Sugar Manufacturing Industry. In our Company, she oversees the operations of the Factory Premises, including production planning, quality control and implementation of business strategies aimed at improving operational efficiency and product quality. She was previously associated with Trimukhi Infra Private Limited, Shree Siddhivinayak Agritech Industries Limited, and Shree Siddhivinayak Foodtech Farmer Producer Company

		Limited as a Director for around two, five, and two years, respectively.
	Position/posts held in the past	Mrs. Dipali Dattatraya Kulkarni has been a Promoter of our Company since its incorporation and was designated as the Managing Director w.e.f. May 19, 2026.
	Other Ventures of the Promoter	**Proprietorship** Siddhtech Transportation and Other Multiservices **Company** Shree Siddhivinayak Foodtech Farmer Producer Company Limited
	Special Achievements	Nil
	Other Directorships	Nil
	**DATTATRAY KASHINATH KULKARNI**	
	Educational Qualification	Bachelor of Commerce, Dr. Babasaheb Ambedkar Marathwada University
	Designation	Executive Director Cum Chief Financial Officer
	Date of Birth	January 30, 1978
	Age	48 years
	Personal Address	Kakade Plot, Sambhaji Nagar, Osmanabad, Maharashtra - 413501, India
	Experience in the Business	He has around five years of experience in this Business
	Occupation	Business
	Permanent Account Number	ANAPK5782A
	No. of Equity Shares held in Company [% of Shareholding (Pre-Issue)]	26,24,875 Equity Shares [21.43%]
	DIN	02745916
	Brief Biography	Mr. Dattatray Kashinath Kulkarni, aged 48 years, is one of the Promoter and Executive Director cum CFO of our Company. He has been associated with the Board of our Company since its inception. He has over five years of experience in Jaggery and Sugar Manufacturing Industry. He oversees the manufacturing operations of our Company, including procurement of raw materials, quality control and implementation of business strategies aimed at improving financial planning and market penetration. He has been serving as the President of Bharatiya Janata Party (BJP) for Dharashiv District since June 02, 2025. He was previously associated with Shree Siddhivinayak Agritech

		Industries Limited as a CEO for a term of around four years and was associated as a Director with Shree Siddhivinayak Foodtech Farmer Producer Company Limited, and SSV Commercial Services and Infra Private Limited for around two years and six years respectively.
	Position/posts held in the past	Mr. Dattatray Kashinath Kulkarni, has been a Promoter of our Company since its incorporation and was designated as the Executive Director Cum Chief Financial Officer w.e.f. May 19, 2026.
	Other Ventures of the Promoter	**Proprietorship** Shri Siddhivinayak Petroleum **Company** Shree Siddhivinayak Foodtech Farmer Producer Company Limited
	Special Achievements	Nil
	Other Directorships	Nil

DECLARATION / CONFIRMATION

- We confirm that the Permanent Account Number, Bank Account Number, Passport Number, Aadhaar Card Number and Driving License Number of our Promoters have been submitted to the Stock Exchange at the time of filing of the Draft Red Herring Prospectus with the Stock Exchange.

- None of our Promoters are categorized as a willful defaulter or a fraudulent borrower, as defined under Regulation 2(1)(lll) of SEBI ICDR Regulations.

- None of our Promoters have been declared as fugitive economic offenders as defined in Regulation 2(1)(p) of the SEBI ICDR Regulations, nor have been declared as a 'fugitive economic offender' under Section 12 of the Fugitive Economic Offenders Act, 2018.

- None of the Promoters or Promoter Group of our Company are debarred from accessing the capital market by SEBI.

- None of the Promoters of our company are a promoter or a director of any other company which is debarred from accessing the capital market by the SEBI;

- There are no defaults in respect of payment of interest and/or principal to the debenture/bond/fixed deposit holders, if any, by our Company and our Promoters during the past three years.

OUTSTANDING LITIGATIONS DETAILS PERTAINING TO OUR PROMOTERS

For details in respect to outstanding litigation relating to our Promoters, kindly refer heading titled "Litigation Involving our Promoters" under the chapter titled "Outstanding Litigation and Material Development" on page no. 287 of this Draft Red Herring Prospectus.

PLEDGE

Our Promoters have not pledged any shares held by them in our Company with any lender.

RELATIONSHIP BETWEEN THE PROMOTERS

The details of relationship between the Promoters of our Company is provided below:

Name of Promoter	Name of other Promoter	Nature of Relationship
Dipali Dattatraya Kulkarni	Dattatray Kashinath Kulkarni	Spouse

CHANGE IN THE CONTROL OF OUR COMPANY IN LAST FIVE YEARS

There has been no change in the control and Promoters of our Company in the last five years.

COMPANIES WITH WHICH OUR PROMOTERS HAVE DISASSOCIATED IN THE LAST THREE YEARS

Except as stated below our Promoters has not disassociated themselves from Promotership of any company or firm during the three years preceding the date of filing of the Draft Red Herring Prospectus.

Sr. No.	Disassociated Entity	Date of Disassociation	Reason and circumstances leading to disassociation along with the terms of such disassociation
Dipali Dattatraya Kulkrani			
1.	Shree Siddhivinayak Agritech Industries Limited	July 08, 2026	She has resigned from the Board position of the said Company and further have also transferred/ sold her entire shareholding in the said Company to end conflict of interest.

COMMON PURSUITS/ CONFLICT OF INTEREST

None of our Promoters are engaged in business activities similar to that of our Company. We shall adopt the necessary procedures and practices as permitted by law to address any conflict situation as and when they arise.

*For risk associated with respect to conflict of interest of our promoters kindly refer to Risk Factor No 24 mentioned in Section titled '**Risk Factors**' on page no. 41of this Draft Red Herring Prospectus.*

INTERESTS OF PROMOTERS

Our Promoters are interested in our Company to the extent (i) that they have promoted our Company; (ii) of their shareholding and the shareholding of their relatives in our Company and the dividend payable, if any and other distributions in respect of the Equity Shares held by them or their relatives; (iii) of being Directors and KMPs of our Company and the remuneration and reimbursement of expenses payable by our Company to them; (iv) that they have provided Properties on rent/lease to our company; (v) that they provided personal guarantees for the loans availed by our Company; (vi) that they have provided collateral for the loans availed by our company; (vii) of the loans advanced by them to our Company; (viii) that our Company in the past and may in the future, undertake other business transactions in the ordinary course of business with them, or their relatives or entities in which our Promoters hold shares.

For details regarding the transaction undertaken by our Company with the Promoters, Promoter Group, entities in which our Promoters have interest, please refer Note 28 titled "Statement of Related Party Transaction" of Annexure V- Notes to Restated Financial Information of the chapter titled "Restated Financial Statements on page no. 248 of this Draft Red Herring Prospectus.

For risk associated w.r.t this kindly refer risk factor 26 under the section titled "Risk Factor" on page no. 42 of this Draft Red Herring Prospectus.

Our Promoters are not interested as a member of a firm or company, and no sum has been paid or agreed to be paid to our Promoters or to any firm or company in cash or shares or otherwise by any person either to induce them to become, or to qualify them as a directors, promoters or otherwise for services rendered by such Promoters or by such firm or company, in connection with the promotion or formation of our Company.

INTEREST IN PROPERTY, LAND, CONSTRUCTION OF BUILDING AND SUPPLY OF MACHINERY

Except as stated in the heading titled "Properties" under the chapter titled "Our Business", on page no. 177 of this Draft Red Herring Prospectus, our Promoters have no interest, whether direct or indirect, in any property acquired by or leased to our Company within the preceding three years from the date of this Draft Red Herring Prospectus or proposed to be acquired by it.

Further, our Management is of the opinion that there is no conflict between our Promoters and our Company w.r.t above stated leased properties.

For details regarding the transaction undertaken by our Company w.r.t acquisition of land, construction of building and purchase of machinery, with the Promoters, Promoter Group, entities in which our Promoters hold interest, during the preceding three years from the date of this Draft Red Herring Prospectus, please refer to Note 28 titled "Statement of Related Party Transaction" of Annexure V- Notes to Restated Financial Information of the chapter titled "Restated Financial Statements on page no. 248 of this Draft Red Herring Prospectus.

For risk associated w.r.t this kindly refer risk factor 26 under the section titled "Risk Factor" on page no. 42 of this Draft Red Herring Prospectus.

PAYMENT OR BENEFIT TO PROMOTERS OF OUR COMPANY

For details of payments or benefits paid to our Promoters / Promoter Group during the two years preceding the date of this Draft Red Herring Prospectus, please refer to Note 28 titled "Statement of Related Party Transaction" of Annexure V- Notes to Restated Financial Information of the chapter titled "Restated Financial Statements on page no. 248 of this Draft Red Herring Prospectus. Further our Company does not intend to make any payments and/or providing benefits to our Promoters, Promoter Group except in the ordinary course of business.

MATERIAL GUARANTEES

Our Promoters have not given any material guarantees to any third parties with respect to the Equity Shares of our Company, as on the date of this Draft Red Herring Prospectus.

NAME OF ANY OF THE PROMOTER APPEARING IN THE LIST OF DIRECTORS OF STRUCK-OFF COMPANIES BY ROC/ MCA.

Mr. Dattatray Kashinath Kulkarni was previously associated with Kalyansagar Agro & Milk Products Private Limited as a Director. The said Company was Struck-off by ROC, Pune under section 248 (1) of the Companies Act, 2013, vide public notice no. ROCP/STK/2017/7120 dated April 07, 2017.

Pursuant to the said notice Mr. Dattatray Kashinath Kulkarni was disqualified for a period of five years i.e from November 01, 2016, to October 31, 2021.

Except as provided above, none of the Promoters of our Company appear in the list of Directors of Companies Struck Off by the ROC/MCA.

For risk associated w.r.t this kindly refer risk factor 11 under the section titled "Risk Factor" on page no. 32 of this Draft Red Herring Prospectus.

SHARES ACQUIRED BY THE PROMOTERS AT A PRICE BELOW THE ISSUE PRICE

For the details of acquisition of Equity Shares by our Promoters at a price lower than issue price during the last one year, kindly refer the clause titled "(4) Allotment of shares dated June 24, 2026" under the sub head tilted "Equity Share Capital" under the head titled "History of Issued, Subscribed and Paid-Up Share Capital of the Company" under the chapter titled "Capital Structure" on page no. 81 of this Draft Red Herring Prospectus.

OUR PROMOTER GROUP

Apart from our Promoters, as per Regulation 2(1)(pp) of the SEBI ICDR Regulations, the following individuals and entities shall form part of our Promoter Group:

A. NATURAL PERSONS WHO ARE PART OF THE PROMOTER GROUP

As per Regulation 2(1) (pp) of the SEBI (ICDR) Regulations, the Natural persons who are part of the Promoter Group (due to their relationship with the Promoter) are as follows:

Name of Relatives of Dipali Dattatraya Kulkarni	Relationship
Kulkarni Prabhakar Dattatraya	Father
Sushila Prabhakar Kulkarni	Mother
Dattatray Kashinath Kulkarni	Spouse
Mangesh Prabhakar Kulkarni Kulakarni Mahesh Prabhakar	Brother
Manisha Manish Eslote	Sister
Arjun Dattatraya Kulkarni Krushna Dattatrya Kulkarni	Son
-	Daughter
Late Kashinathrao Kulkarni	Spouse's Father
Mainabai Kashinath Kulkarni	Spouse's Mother
Mukund Kashinathrao Kulkarni	Spouse's Brother
Pande Sunita Rajendra Shakuntala Kanta Kale	Spouse's Sister

Name of Relatives of Dattatray Kashinath Kulkarni	Relationship
Late Kashinathrao Ramchandrarao Kulkarni	Father
Mainabai Kashinath Kulkarni	Mother
Dipali Dattatraya Kulkarni	Spouse
Mukund Kashinathrao Kulkarni	Brother
Pande Sunita Rajendra Shakuntala Kanta Kale	Sister
Arjun Dattatraya Kulkarni Krushna Dattatrya Kulkarni	Son
-	Daughter
Kulkarni Prabhakar Dattatraya	Spouse's Father
Sushila Prabhakar Kulkarni	Spouse's Mother
Mangesh Prabhakar Kulkarni Kulakarni Mahesh Prabhakar	Spouse's Brother
Manisha Manish Eslote	Spouse's Sister

B. ENTITIES FORMING PART OF PROMOTER GROUP

- **Companies**

  - Shree Siddhivinayak Foodtech Farmer Producer Company Limited

    (the above said company is a producer company engaged in production and trading of dairy and Agri products)

- **Firms / LLP**

  - There are no Firms/LLPs forming a part of the Promoters Group.

- **HUFs**

  - There are no HUFs forming a part of the Promoters Group.

- **Other entities forming part of Promoter Group**

  - Shree Siddhivinayak Multistate Co-operative Credit Society Ltd

    (the above said society functions as a co-operative bank)

  - Shri Siddhivinayak District Co-op Credit Society Limited Osmanabad

    (the above said society functions as a co-operative bank)

  - Shree Siddhivinayak Society

    (the above said society is engaged in soil testing activities for the farmers)

  - Lotus Multi Speciality Co-operative Hospital and Reserch Center Limited

    (the above said society is engaged in hospital and medical research related work)

  - Shree Siddhtech Multi State Co-operative Housing Society Limited

    (the above said society is engaged in giving housing finance to its members)

  - Shri Siddhivinayak Social Foundation

    (*the above said foundation is engaged in promotion of educational activities)*

- **Other Persons forming part of Promoters Group**

  - There are no other persons forming part of Promoters Group

(Rest of the page is intentionally left blank)

OUR GROUP COMPANIES

In terms of the SEBI (ICDR) Regulations, the term "group companies", includes:

a) such companies (other than promoter(s) and subsidiary/subsidiaries) with which the issuer company had related party transactions during the period for which financial information is disclosed in the Restated Financial Statements, as covered under applicable accounting standards, and
b) any other companies considered material by the Board of Directors of the relevant issuer company.

Accordingly, for:

(a) above, all such companies (other than our Promoters and Subsidiaries) with which there were related party transactions during the periods covered in the Restated Financial Statements, as covered under the applicable accounting standards, shall be considered as Group Companies in terms of the SEBI (ICDR) Regulations. For the purpose of avoidance of doubt it is stated that we do not have any Corporate Promoter and Subsidiaries during the last three financial years as covered in the Restated Financial Statements.

(b) above, the board at its meeting held on June 01, 2026 has adopted the Materiality Policy and has considered group companies of our Company to be such companies (other than the companies categorized under (a) above) that are a part of the Promoter Group (as defined in Regulation 2(1)(pp) of the SEBI ICDR Regulations) and with which our company has entered into one or more transactions during the most recent Financial Year as included in the Restated Financial Statements, that which individually or cumulatively exceeds 10% of the revenue of our Company derived from the Restated Financial Information of the last completed full financial year.

Accordingly, in accordance with the SEBI ICDR Regulations and the terms of the Materiality Policy for identification of the Group Companies, our Board has identified the following as Group Companies:

Sr. No.	Name of Group Entities	Registered Office Address	Nature of business	Nature of interest	
				Name of the interested person	Share holding in Group Co
1.	Shree Siddhivinayak Foodtech Farmer Producer Company Limited CIN: U01110MH2022PTC393375	27/2718 Sambhaji Nagar Kakde Plot, Osmanabad, Maharashtra, India, 413501	The said Company is a producer company engaged in production and trading of dairy and agri products.	Dattatray Kashinath Kulkarni	740 Equity Shares
				Dipali Dattatraya Kulkarni	100 Equity Shares
2.	Shree Siddhivinayak Agritech Industries Limited CIN: U01409MH2021PLC353101	Plot No-27/2718 Sambhaji Nagar Kakde Plot, Osmanabad, Maharashtra, India, 413501	The said company is engaged in the manufacturing, processing, trading and distribution of sugar, jaggery and their by-products.	Nil	

As on the date of this Draft Red Herring Prospectus, our Promoters/Directors are not related/connected with Shree Siddhivinayak Agritech Industries Limited. Our Promoter/Director have disassociated themselves from Siddhivinayak Agritech Industries Limited during the year 2026. *Kindly refer the data of disassociation in the heading titled "Companies with which our Promoters have disassociated in the last three years" under the chapter titled "Our Promoters" beginning on page no. 220 of this Draft Red Herring Prospectus.* Further Siddhivinayak Agritech Industries Limited has been disclosed as a group company only because our Company has undertaken transactions with Siddhivinayak Agritech Industries Limited in the past which was considered as Related Party Transaction.

DETAILS OF GROUP COMPANIES

Financial Information

Information with respect to reserves (excluding revaluation reserves), sales, profit after tax, earnings per share, diluted earnings per share and net asset value, derived from the audited standalone financial statements of respective Group Companies for the last three financial years are available on our Company's website at https://shreesiddhivinayakgreentech.com.

Common pursuits

Except for Siddhivinayak Agritech Industries Limited (engaged in the business of manufacturing, processing, trading and distribution of sugar, jaggery and their by-products), none of our Group companies are engaged in business activities similar to that of our Company.

For risk associated with the above kindly refer the risk factor 24 under the section titled "Risk Factor" on page no. 41 of this Draft Red Herring Prospectus.

Nature and extent of interest of Group Company

In the promotion of our Company

As on the date of this Draft Red Herring Prospectus, our Group Company does not have any interest in the promotion or formation of our Company.

Interest in property, land, construction of building and supply of machinery

None of our Group Companies have any interest w.r.t property, land, construction of building and supply of machinery of our Company during preceding three years or as on the date of this Draft Red Herring Prospectus.

Related Business Transactions within our Group Company and significance on the financial performance of our Company

Except as set forth in the Note 28 titled "Statement of Related Party Transaction" of Annexure V- Notes to Restated Financial Information of the chapter titled "Restated Financial Statements on page no. 248 of this Draft Red Herring Prospectus, no other related party transactions have been entered into between our Group Company and our Company.

Business Interests of Group Company

Except as set forth in the Note 28 titled "Statement of Related Party Transaction" of Annexure V- Notes to Restated Financial Information of the chapter titled "Restated Financial Statements on page no. 248 of this Draft Red Herring Prospectus, our Group Company do not have or currently propose to have any business interest in our Company.

Litigation

Except as mentioned under the heading titled "Litigation involving our Group Company" under the chapter titled "Outstanding Litigation and Material Development" on page no. 288 of this Draft Red Herring Prospectus. There are no pending litigation involving our Group Company.

Confirmations

Our Group Company does not have any securities listed on the stock exchange.

(Rest of the page is intentionally left blank)

DIVIDEND POLICY

Our Company does not have any formal dividend policy for the equity shares. Our Company can pay final dividends upon a recommendation by the Board of Directors and approval by majority of the members at the General Meeting of the shareholders subject to the provisions of the Articles of Association and the Companies Act, 2013. The Articles of Association of our Company also gives discretion to the Board of Directors to declare and pay interim dividends.

Our Company has not declared any dividends on Equity Shares for the period covered in the Restated Financial Statements and for the period from March 31, 2026 until the date of this Draft Red Herring Prospectus.

The dividends may be paid out of profits of our Company in the year in which the dividend is declared or out of the undistributed profits or reserves of previous fiscal years or out of both which shall be arrived at after providing for depreciation in accordance with the provisions of Companies Act 2013. The declaration and payment of dividend will depend on a number of factors, including but not limited to the results of operations, earnings, capital requirements and surplus, general financial conditions, applicable Indian legal restrictions, contractual obligations and restrictions, restrictive covenants under the loan and other financing arrangements to finance the various projects of our Company and other factors considered relevant by our Board of Directors.

Interim Dividend / Final Dividends are payable within 30 days of approval by the Board of Directors of our Company or the Equity Shareholders at the Annual General Meeting of our Company, respectively. When dividends are declared, all the Equity Shareholders whose names appear in the register of members of our Company as on the "Record Date" are entitled to be paid the dividend declared by our Company. Any Equity Shareholder who ceases to be an Equity Shareholder prior to the Record Date, or who becomes an Equity Shareholder after the Record Date, will not be entitled to the dividend declared by our Company.

Our Company's corporate actions pertaining to payment of dividends in the past are not to be taken as being indicative of the payment of dividends by our Company in the future.

For risk associated with respect to declaration of dividend kindly refer to Risk Factor No 47 mentioned in Section titled 'Risk Factors' on page no. 49 of this Draft Red Herring Prospectus.

(Rest of the page is intentionally left blank)

SECTION VI: FINANCIAL INFORMATION

RESTATED FINANCIAL STATEMENTS

Examination report of Independent Auditor on the Restated Financial Statements of
SHREE SIDDHIVINAYAK GREENTECH INDUSTRIES LIMITED
(Formerly known as Shree Siddhivinayak Greentech Industries Private Limited)

To,
The Board of Directors
Shree Siddhivinayak Greentech Industries Limited
(formerly known as Shree Siddhivinayak Greentech Industries Private Limited)
Block Number 1 and 4 Floor No-1 and 2 Survey No 120, Plot No 4 & C.T.S. Number-5343
Sambhaji Nagar Behind DIC, Osmanabad,
Maharashtra, India - 413501

Dear Sir,

We have examined the attached Restated Financial Statements of Shree Siddhivinayak Greentech Industries Limited (Formerly known as Shree Siddhivinayak Greentech Industries Private Limited) ("Company") comprising the Restated Standalone Financial Statements of the Company constituting Restated Statement of Assets and Liabilities as at March 31, 2026, 2025 and 2024, the Restated Statements of Profit and Loss, the Restated Cash Flow Statement for the period ended, March 31, 2026, 2025 and 2024. The Summary Statement of Significant Accounting Policies, the Notes and Annexures as forming part of these Restated Financial Statements (collectively, the "Restated financial statement"), as approved by the Board of Directors of the Company at their meeting held on June 30, 2026 for the purpose of inclusion in the Draft Offer document/ Offer document ("Draft Offer document/ Offer Document") prepared by the Company in connection with its proposed SME Initial Public Offer of equity shares ("SME IPO") prepared in terms of the requirements of:

a) Section 26 of Part I of Chapter III of the Companies Act, 2013 (the "Act");
b) The Securities and Exchange Board of India (Issue of Capital and Disclosure Requirements) Regulations, 2018, as amended ("ICDR Regulations"); and
c) The Guidance Note on Reports in Company Prospectuses (Revised 2019) issued by the Institute of Chartered Accountants of India ("ICAI"), as amended from time to time (the "Guidance Note").

Management's Responsibility for the Restated Financial Statements

1. The Company's Board of Directors is responsible for the preparation of the Restated Financial Statements for the purpose of inclusion in the Draft Offer Document/ Offer Document.

2. The Restated Financial Statements have been prepared by the management of the Company on the basis of preparation stated in Annexure IV to the Restated Financial Statements. The Board of Directors of the Company's responsibility includes designing, implementing, and maintaining adequate internal control relevant to the preparation and presentation of the Restated Financial Statements. The Board of Directors is also responsible for identifying and ensuring that the Company complies with the Act, ICDR Regulations, and the Guidance Note.

Auditors' Responsibilities

3. We have examined such Restated Financial Statements taking into consideration:

   a. The terms of reference and terms of our engagement agreed with you in accordance with our engagement letter; requesting us to carry out the assignment, in connection with the proposed IPO of equity shares of the Company

   b. The Guidance Note. The Guidance Note also requires that we comply with the ethical requirements of the Code of Ethics issued by the ICAI;

   c. Concepts of test checks and materiality to obtain reasonable assurance based on verification of evidence supporting the Restated Financial Statements; and

   d. The requirements of Section 26 of the Act and the ICDR Regulations.

Our work was performed solely to assist you in meeting your responsibilities in relation to your compliance with the Act, the ICDR Regulations, and the Guidance Note in connection with the proposed initial public offer of its equity shares of the Company.

4. The Restated Financial Statements have been compiled by the management of the Company from:

   i. The audited financial statements of the Company as at and for the financial year ended March 31, 2026 which were prepared in accordance with the Accounting Standards as prescribed under Section 133 of the Act, read with Rule 7 of the Companies (Accounts) Rules, 2014, as amended, and other accounting principles generally accepted in India ("**Audited Financial Statements 2026**");

   ii. The audited financial statements of the Company as at and for the financial year ended March 31, 2025 which were prepared in accordance with the Accounting Standards as prescribed under Section 133 of the Act, read with Rule 7 of the Companies (Accounts) Rules, 2014, as amended, and other accounting principles generally accepted in India ("**Audited Financial Statements 2025**");

   iii. The audited financial statements of the Company as at and for the financial year ended March 31, 2024 which were prepared in accordance with the Accounting Standards as prescribed under Section 133 of the Act, read with Rule 7 of the Companies (Accounts) Rules, 2014, as amended, and other accounting principles generally accepted in India ("**Audited Financial Statements 2024**").

   The statutory audits for financial year ended on, March 31, 2026, March 31, 2025 and March 31, 2024 were conducted by us i.e. A N Gawade & Co LLP, Chartered Accountants. Accordingly, reliance has been placed on the financial information examined by us for the said years. The examination report included for these years is based solely on the report submitted by us and no audit has been carried out by us.

5. For the purpose of our examination, we have relied on:

   a. the Auditors' reports issued by us dated on Audited Financial Statements June 23, 2026 as at and for the year ended March 31, 2026 as referred in Paragraph 4 above;

   b. the Auditors' reports issued by us dated on September 12, 2025 Audited Financial Statements 2025 as at and for the year ended March 31, 2025 as referred in Paragraph 4 above;

   c. the Auditors' reports issued by us dated on September 05, 2024 Audited Financial Statements 2024 as at and for the year ended March 31, 2024 as referred in Paragraph 4 above;

6. Based on our examination and according to the information and explanations given to us, we report that the Restated financial information have been prepared:

   a) have been prepared after incorporating adjustments for changes in accounting policies, material errors and regrouping/reclassifications retrospectively in the financial year ended March 31, 2026 March 31, 2025 and March 31, 2024 to reflect the same accounting treatment as per the accounting policies and groupings/classifications as at and for the period ended March 31, 2026;

   b) There are no qualifications in the auditor's reports on the financial statements of as at and for the year ended March 31, 2026, March 31, 2025, and March 31, 2024, which require any adjustments to the Restated Financial Statements.

   c) have been prepared in accordance with the Act, ICDR Regulations and the Guidance Note.

7. We have been subjected to the peer review process of the ICAI and hold a valid peer review certificate issued by the "Peer Review Board" of the ICAI.

8. The Restated Financial Statements do not reflect the effects of events that occurred subsequent to the respective dates of the reports on Audited Financial Statements mentioned in paragraph 7 above.

9. The report should not in any way be construed as a re-issuance or re-dating of any of the previous audit reports issued by us or Previous Auditor nor should this report be construed as a new opinion on any of the financial statements referred to therein.

10. We have no responsibility to update our report for events and circumstances occurring after the date of the report.

11. Our report is intended solely for use of the Board of Directors for inclusion in the Offer Documents to be filed with SEBI, Stock Exchange, and ROC in connection with the proposed IPO. Our report should not be used, referred to, or distributed for any other purpose except with our prior consent in writing. Accordingly, we do not accept or assume any liability or any duty of care for any other purpose or to any other person to whom this report is shown or into whose hands it may come without our prior consent in writing.

For A N Gawade & Co LLP
Chartered Accountants
Firm Registration Number: 122158W/W100907

Sd/-
CA Shekhar R. Maske
Designated Partner
M. No.: 157321
UDIN: 26157321ALIYWN1745
Place: Pune
Date: June 30, 2026

(Rest of the page is intentionally left blank)

Annexure I- Restated Statement of Assets and Liabilities

(Amount in ₹ lakhs, unless otherwise stated)

Particulars		Note Nos.	As at		
			31 March 2026	31 March 2025	31 March 2024
A)	**EQUITY AND LIABILITIES**				
1.	**Shareholders' Funds**				
(a)	Share capital	1	490.00	990.00	990.00
(b)	Reserves and surplus	2	2,017.01	857.78	308.13
	Total (A)		**2,507.01**	**1,847.78**	**1,298.13**
2.	**Share Application Money Pending Allotment**		**-**	**-**	-
3.	**Non Current Liabilities**				
(a)	Long-term borrowings	3a	3,419.39	3,025.53	3,988.37
(b)	Deferred tax liabilities (Net)	10	348.54	204.84	39.15
(c)	Long-term provisions	4	9.11	4.87	2.04
	Total (B)		**3,777.04**	**3,235.24**	**4,029.56**
4.	**Current Liabilities**				
(a)	Short-term Borrowings	3b	5,575.98	4,250.05	3,656.89
(b)	Trade Payables	5			
	(i) total outstanding dues of micro enterprises and small enterprises; and		29.65	46.08	-
	(ii) total outstanding dues of creditors other than micro enterprises and small enterprises		1,674.97	1,279.72	2,415.36
(c)	Other current liabilities	6	866.50	862.57	77.70
(d)	Short term provisions	7	155.32	0.26	0.01
	Total (C)		**8,302.42**	**6,438.68**	**6,149.96**
	Total Equity and Liabilities (A+B+C)		**14,586.47**	**11,521.70**	**11,477.65**
B)	**ASSETS**				
1.	**Non Current Assets**				
(a)	Property, Plant and Equipment and Intangible assets	8			
	(i) Property, Plant and Equipment		6,683.95	5,481.56	5,278.80
	(ii) Intangible assets		-	-	-
	(iii) Capital Work-in-progress		-	266.98	193.22
	(iv) Intangible assets under development		-	-	-
			6,683.95	**5,748.54**	**5,472.02**
(b)	Non-current investments	9	53.25	48.20	649.20
(c)	Deferred tax asset (Net)	10	-	-	-
(d)	Other non-current assets	11	343.70	78.49	-
	Total (A)		**7,080.90**	**5,875.23**	**6,121.22**
2.	**Current Assets**				
(a)	Inventories	12	5,585.20	4,801.22	4,715.61
(b)	Trade receivables	13	723.56	14.89	266.69
(c)	Cash and bank balances	14	119.62	101.71	13.22
(d)	Short term loans and advances	15	235.94	312.04	69.94
(e)	Other current assets	16	841.25	416.61	290.97
	Total (B)		**7,505.57**	**5,646.47**	**5,356.43**
	Total Assets (A+B)		**14,586.47**	**11,521.70**	**11,477.65**

The above statement should be read with Basis of Preparation, Significant Accounting Policies appearing in Annexure IV, and Notes to Restated Financial Information appearing in Annexure V.

This is the Restated Statement of Assets and Liabilities referred to in our report of even date.

For A N Gawade & Co LLP
Chartered Accountants
Firm Registration Number:
122158W/W100907

Sd/-
CA Shekhar R. Maske
Designated Partner
M. No.: 157321
UDIN: 26157321ALIYWN1745
Place: Pune
Date: June 30, 2026

For Shree Siddhivinayak Greentech Industries Limited

Sd/-
Dipali Dattatraya Kulkarni
Managing Director
(DIN: 09021630)

Sd/-
Dattatray Kashinath Kulkarni
Executive Director cum CFO
(DIN: 02745916)

Sd/-
Pearl Santosh Dsouza
Company Secretary
Place: Pune
Date: June 30, 2026

.

Annexure II- Restated Statement of Profit and Loss

(Amount in ₹ lakhs, unless otherwise stated)

Particulars		Note Nos.	For the year ended		
			31 March 2026	31 March 2025	31 March 2024
1.	**Income**				
(a)	Revenue from operations	17	7,526.77	5,856.63	3,627.64
(b)	Other income	18	304.86	256.16	62.81
	Total income		**7,831.63**	**6,112.79**	**3,690.45**
2.	**Expenditure**				
(a)	Cost of Materials Consumed	19	5,136.88	3,538.80	6,633.57
(b)	Manufacturing expenses	20	266.01	253.10	375.92
(c)	Changes in inventories of finished goods, work-in-progress and stock-in-trade	21	(783.98)	(85.61)	(4,715.61)
(d)	Employee benefit expenses	22	463.55	389.08	294.03
(e)	Finance cost	23	685.96	801.53	460.91
(f)	Depreciation & amortisation expense	24	175.33	158.97	147.79
(g)	Other expenses	25	300.84	288.88	130.60
	Total Expenses		**6,244.59**	**5,344.75**	**3,327.21**
3.	**Profit/(Loss) before exceptional and extra ordinary item and tax (1-2)**		**1,587.04**	**768.04**	**363.24**
4.	Exceptional items		-	-	-
5.	**Profit/(Loss) before extraordinary items and tax (3-4)**		**1,587.04**	**768.04**	**363.24**
6.	Extraordinary items		-	-	-
7.	**Profit/(Loss) before tax (5-6)**		**1,587.04**	**768.04**	**363.24**
8.	**Tax expense:**				
(a)	Tax expense for current year	26	284.11	53.25	15.96
(b)	Short / (Excess) provision of tax relating to earlier years		-	(0.55)	-
(b)	Deferred tax	26	143.71	165.68	39.15
	Net current tax expenses		**427.82**	**218.38**	**55.11**
9.	**Profit/(Loss) for the year (7-8)**		**1,159.22**	**549.66**	**308.13**
	Earnings per share [nominal value of ₹ 10 per share] (Pre bonus issue)				
	Basic	27A	23.66	11.22	6.29
	Diluted	27A	23.66	11.22	6.29
	Earnings per share [nominal value of ₹ 10 per share] (Post bonus issue)				
	Basic	27B	9.46	4.49	2.52
	Diluted	27B	9.46	4.49	2.52
The above statement should be read with Basis of Preparation, Significant Accounting Policies appearing in Annexure IV, and Notes to Restated Financial Information appearing in Annexure V.					
This is the Restated Statement of Profit and Loss referred to in our report of even date.					

.

For A N Gawade & Co LLP
Chartered Accountants
Firm Registration Number:
122158W/W100907

For Shree Siddhivinayak Greentech Industries Limited

Sd/-
Dipali Dattatraya Kulkarni
Managing Director
(DIN: 09021630)

Sd/-
Dattatray Kashinath Kulkarni
Executive Director cum CFO
(DIN: 02745916)

Sd/-
CA Shekhar R. Maske
Designated Partner
M. No.: 157321
UDIN: 26157321ALIYWN1745
Place: Pune
Date: June 30, 2026

Sd/-
Pearl Santosh Dsouza
Company Secretary
Place: Pune
Date: June 30, 2026

.

Annexure III- Restated Statement of Cash Flows

(Amount in ₹ lakhs, unless otherwise stated)

Particulars	For the year ended		
	31 March 2026	31 March 2025	31 March 2024
A) Cash Flow From Operating Activities :			
Net Profit before tax	1,587.04	768.04	363.24
Adjustments for :			
Depreciation and amortization expense	175.33	158.97	147.79
Interest income	(19.58)	(12.12)	(8.15)
Interest Paid	685.96	801.53	460.91
Operating profit before working capital changes	**2,428.75**	**1,716.42**	**963.79**
Changes in Working Capital			
(Increase)/Decrease in Inventories	(783.98)	(85.61)	(4,715.61)
(Increase)/Decrease in trade receivables	(708.67)	251.80	(266.69)
(Increase)/Decrease in other current assets	(424.64)	(125.64)	161.40
Increase/(Decrease) in trade payables	378.82	(1,089.56)	2,017.47
Increase/(Decrease) in other current liabilities	3.93	784.87	77.70
Increase/(Decrease) in long term provisions	4.24	2.83	2.04
Increase/(Decrease) in short term provisions	155.06	0.25	(2.78)
(Increase)/Decrease in other non current assets	(265.21)	(78.49)	-
Cash generated from operations before taxes	**788.30**	**1,376.87**	**(1,762.68)**
Direct Tax Paid	(284.11)	(52.70)	(15.96)
Net cash flow from/(used in) operating activities	**504.19**	**1,324.17**	**(1,778.64)**
B) Cash Flow From Investing Activities :			
Purchase of Property, Plant and Equipment/ Transfer from CWIP to PPE	(1,377.72)	(435.49)	(5,619.82)
Sale of Property, Plant and Equipment/transfer from CWIP to PPE	266.98	-	4,217.08
(Increase)/Decrease in non-current investments	(5.05)	601.00	(638.45)
(Increase)/Decrease in short-term loans & advances	76.10	(242.10)	(29.98)
Interest income on fixed deposit	19.58	12.12	8.15
Net cash flow from/(used in) investing activities	**(1,020.11)**	**(64.47)**	**(2,063.02)**
C) Cash Flow From Financing Activities :			
Capital issued during the year	-	-	980.00
Redemption of Preference shares	(500.00)	-	-
Proceeds from long-term borrowings	393.86	-	-
Repayment of long-term borrowings	-	(962.84)	(478.51)
Proceeds from short-term borrowings	1,325.93	593.16	3,646.64
Repayment of short-term borrowings	-	-	-
Interest Paid	(685.96)	(801.53)	(460.91)
Net cash flow from/(used in) financing activities	**533.83**	**(1,171.21)**	**3,687.22**
Net Increase/(Decrease) In Cash & Cash Equivalents	17.91	88.49	(154.44)
Cash equivalents at the beginning of the year	101.71	13.22	167.66
Cash equivalents at the end of the year	119.62	101.71	13.22

Notes :- PARTICULARS		For the year ended		
		31 March 2026	31 March 2025	31 March 2024
1	Component of Cash and Cash equivalents			
	Cash on hand	46.07	40.76	5.61
	Balances with banks			
	- In Current Accounts	73.55	60.95	7.61
	- In Deposit Account	-	-	-
2.1	The Restated Statement of Cash Flows has been prepared under the indirect method as set out in AS 3, Statement of Cash Flows.			
2.2	The above statement should be read with Basis of Preparation, Significant Accounting Policies appearing in Annexure IV, and Notes to Restated Financial Information appearing in Annexure V.			
2.3	This is the Restated Statement of Cash Flows referred to in our report of even date.			

For A N Gawade & Co LLP
Chartered Accountants
Firm Registration Number:
122158W/W100907
Sd/-
CA Shekhar R. Maske
Designated Partner
M. No.: 157321
UDIN: 26157321ALIYWN1745
Place: Pune
Date: June 30, 2026

For Shree Siddhivinayak Greentech Industries Limited

Sd/-
Dipali Dattatraya Kulkarni
Managing Director
(DIN: 09021630)

Sd/-
Dattatray Kashinath Kulkarni
Executive Director cum CFO
(DIN: 02745916)

Sd/-
Pearl Santosh Dsouza
Company Secretary
Place: Pune
Date: June 30, 2026

Annexure IV- Significant Accounting Policies and Notes to Restated Financial Information

(Amount in ₹ lakhs, except for share data unless otherwise stated)

1. COMPANY INFORMATION

Shree Siddhivinayak Greentech Industries Limited ("the Company") (formerly known as Shree Siddhivinayak Greentech Industries Private Limited) is a public limited company domiciled in India and incorporated on 24th June, 2022 under the provisions of the Companies Act, 2013, having Corporate Identification Number (CIN) U15134MH2022PLC385368. The Company is registered with the Registrar of Companies, Mumbai and its registered office is situated at Block Number 1 and 4 Floor No 1 and 2 Survey No 120, Plot No 4 & C.T.S. Number - 5343 Sambhaji Nagar Behind DIC, Osmanabad, Maharashtra, India,413501

The Company is engaged in the manufacturing of food products, primarily jaggery and jaggery-based food premixes from sugarcane.

During the financial year 25-26, the Company was converted from a Private Limited Company to a Public Limited Company, and accordingly, the name of the Company was changed to its present name with effect from 27th March 2026.

2. SIGNIFICANT ACCOUNTING POLICIES

a. Basis of Preparation

These financial statements have been prepared in accordance with the Generally Accepted Accounting Principles in India ('Indian GAAP') to comply with the Accounting Standards specified under Section 133 of the Companies Act, 2013, as applicable. The financial statements have been prepared under the historical cost convention on accrual basis, except for certain financial instruments which are measured at fair value.

b. Use of Estimates

The preparation of financial statements requires the management of the Company to make estimates and assumptions that affect the reported balances of assets and liabilities and disclosures relating to the contingent liabilities as at the date of the financial statements and reported amounts of income and expense during the year. Examples of such estimates include provisions for doubtful receivables, provision for income taxes, the useful lives of depreciable Property, Plant and Equipment and provision for impairment. Future results could differ due to changes in these estimates and the difference between the actual result and the estimates are recognised in the period in which the results are known / materialise.

c. Property, Plant & Equipment

Property, Plant & Equipment are stated at historical cost less accumulated depreciation and impairment losses. Cost includes purchase price and all other attributable cost to bring the assets to its working condition for the intended use. Cost includes financing cost relating to borrowed funds attributable to the construction or acquisition of qualifying fixed asset upto the date the asset is ready for use. Subsequent expenditures related to an item of tangible asset are added to its book value only if they increase the future benefits from the existing asset beyond its previously assessed standard of performance.

d. Depreciation and amortization

Depreciation on tangible fixed assets is provided on the Straight Line Method (SLM) over the useful lives of the assets estimated by the management. Depreciation on additions to fixed assets is provided on a pro-rata basis from the date of acquisition/installation, and on assets sold, discarded or demolished during the year, is provided up to the date on which such assets are sold, discarded or demolished.

The useful lives adopted by the Company in respect of certain classes of assets are different from those prescribed under Part C of Schedule II to the Companies Act, 2013. The useful lives have been determined based on technical evaluation carried out by the management, taking into consideration the nature of the assets, the estimated usage of the assets, the operating conditions, past history of replacement, anticipated technological changes and maintenance support. The management believes that the useful lives as adopted best represent the period over which the assets are expected to be used.

The useful life of the Assets has been taken as below;

Type of Assets	Useful life
Buildings	40 years
Plant and Equipment	35 years
Furniture & Fixture	15 years
Office Equipment	5 years
Computers	3 years

e. Impairment of Assets

At each balance sheet date, the management reviews the carrying amounts of its assets included in each cash generating unit to determine whether there is any indication that those assets were impaired. If any such indication exists, the recoverable amount of the asset is estimated in order to determine the extent of impairment. Recoverable amount is the higher of an asset's net selling price and value in use. In assessing value in use, the estimated future cash flows expected from the continuing use of the asset and from its disposal are discounted to their present value using a pre-tax discount rate that reflects the current market assessments of time value of money and the risks specific to the asset. Reversal of impairment loss is recognised as income in the statement of profit and loss.

f. Investment

Long-term investments and current maturities of long-term investments are stated at cost, less provision for other than temporary diminution in value. Current investments, except for current maturities of long-term investments, comprising investments in mutual funds, government securities and bonds are stated at the lower of cost and fair value.

g. Inventories

Raw materials are carried at the lower of cost and net realisable value. Cost is determined on a weighted average basis. Purchased goods-in-transit are carried at cost. Work-in-progress is carried at the lower of cost and net realisable value. Stores and spare parts are carried at lower of cost and net realisable value. Finished goods produced or purchased by the Company are carried at lower of cost and net realisable value. Cost includes direct material and labour cost and a proportion of manufacturing overheads.

The valuation for inventories is as follows;

Classification	Valuation Policy
Finished Goods	At lower of cost or net realizable
Raw Material	At lower of cost or net realizable
WIP	At Cost
Consumables	At Cost

h. Cash and cash equivalents

The Company considers all highly liquid financial instruments, which are readily convertible into known amount of cash that are subject to an insignificant risk of change in value and having original maturities of three months or less from the date of purchase, to be cash equivalents.

i. Revenue recognition

Sale of goods

Revenue is recognised to the extent that it is probable that the economic benefits will flow to the Company and the revenue can be reliably measured, in accordance with Accounting Standard (AS) 9 – Revenue Recognition.

(a) Sale of Goods: Revenue from the sale of goods is recognised when the significant risks and rewards of ownership of the goods have been transferred to the buyer, usually on dispatch/delivery of goods, and no significant uncertainty exists regarding the amount of consideration that will be derived from the sale. Sales are disclosed net of Goods and Services Tax (GST), trade discounts, rebates, and sales returns, wherever applicable.

(b) Sale of Services: Revenue from services is recognised on rendering of services to customers, based on the stage of completion of the underlying contract and when no significant uncertainty exists regarding the amount of consideration that will be derived.

(c) Interest Income: Interest income is recognised on a time proportion basis, taking into account the amount outstanding and the applicable rate of interest.

(d) Dividend Income: Dividend income is recognised on receipt basis.

(e) Other Income: Other items of income are recognised on an accrual basis, except where the receipt of income is uncertain.

j. Employee Benefits

Post-employment benefit plans
Contributions to defined contribution retirement benefit schemes are recognised as expense when employees have rendered services entitling them to such benefits.

For defined benefit schemes, the cost of providing benefits is determined using the Projected Unit Credit Method, with actuarial valuations being carried out at each balance sheet date. Actuarial gains and losses are recognised in full in the statement of profit and loss for the period in which they occur. Past service cost is recognised immediately to the extent that the benefits are already vested, or amortised on a straight-line basis over the average period until the benefits become vested.

The retirement benefit obligation recognised in the balance sheet represents the present value of the defined benefit obligation as adjusted for unrecognised past service cost, and as reduced by the fair value of scheme assets. Any asset resulting from this calculation is limited to the present value of available refunds and reductions in future contributions to the scheme.

Other employee benefits
The undiscounted amount of short-term employee benefits expected to be paid in exchange for the services rendered by employees is recognised during the period when the employee renders the service. These benefits include compensated absences such as paid annual leave, overseas social security contributions and performance incentives.

Compensated absences which are not expected to occur within twelve months after the end of the period in which the employee renders the related services are recognised as an actuarially determined liability at the present value of the defined benefit obligation at the balance sheet date.

k. Borrowing Cost

Borrowing cost attributable to the qualifying fixed assets during construction/exploration, renovation and modernisation are capitalised.

l. Taxation

Current tax
Tax expense comprises current tax (i.e. amount of tax for the period determined in accordance with the Income Tax Act, 1961) and deferred tax charge or credit (reflecting the tax effect of timing differences between accounting income and taxable income for the period).

Current tax: Provision for income tax is recognized based on estimated tax liability computed after adjusting for allowances, disallowances and exemptions in accordance with the Income Tax Act, 1961

Deferred taxation: The deferred tax charge or credit and the corresponding deferred tax liabilities and assets are recognized using the tax rates that have been enacted or substantively enacted at the balance sheet date. Deferred tax assets are recognised only to the extent there is reasonable certainty that the asset can be realised in future; however, where there is unabsorbed depreciation or carried forward loss under taxation laws, deferred tax assets are recognised only if there is a virtual certainty of realisation of the assets. Deferred tax assets are reviewed at each balance sheet date and written down or written-up to reflect the amount that is reasonably/ virtually certain (as the case may be) to be realised.

Advance taxes and provisions for current income taxes are presented in the balance sheet after off-setting advance tax paid and income tax provision arising in the same tax jurisdiction for relevant tax paying units and where the Company is able to and intends to settle the asset and liability on a net basis.
The Company offsets deferred tax assets and deferred tax liabilities if it has a legally enforceable right and these relate to taxes on income levied by the same governing taxation laws.

Deferred tax
Deferred tax expense or benefit is recognised on timing differences being the difference between taxable income and accounting income that originate in one period and is likely to reverse in one or more subsequent periods. Deferred tax assets and liabilities are measured using the tax rates and tax laws that have been enacted or substantively enacted by the balance sheet date.

The Company offsets deferred tax assets and deferred tax liabilities if it has a legally enforceable right and these relate to taxes on income levied by the same governing taxation laws.

m. Segment accounting

(i) Business Segment
The Company operates in a single business segment. Accordingly, the disclosure requirements of AS 17 "Segment Reporting" in respect of business segments are not applicable, and the figures appearing in these financial statements relate to that single segment.

(ii) Geographical Segment
The Company's operations are conducted entirely within India. As there are no operations outside India, the Company has a single geographical segment, and the figures appearing in these financial statements relate to that segment.

n. Government Grants

Government grants are recognized when there is reasonable assurance that the Company will comply with the conditions attached to such grants and that the grants will be received.

In accordance with the requirements of Accounting Standard (AS) 12 – “Accounting for Government Grants”, an appropriate amount in respect of such grants, estimated on a prudent basis, is recognized in the Statement of Profit and Loss in the period in which the related benefits are earned, even if the actual receipt of such grants occurs subsequent to the end of the reporting period.

Where at the end of the reporting period, it is reasonably expected that the grant will be received in the subsequent financial year, the income in respect thereof is recognized in the current financial year on an accrual basis.

o. Earnings Per Shares

Basic earning per share is computed by dividing the net profit or loss for the period attributable to equity shareholders by the weighted average number of equity shares outstanding during the period. Diluted earning per share is computed by taking into account the weighted average number of equity shares outstanding during the period and the weighted average number of equity shares which would be issued on conversion of all dilutive potential equity shares into equity shares.

p. Provisions, Contingent liabilities and Contingent assets

A provision is recognised when the Company has a present obligation as a result of past event and it is probable that an outflow of resources will be required to settle the obligation, in respect of which reliable estimate can be made. Provisions (excluding retirement benefits and compensated absences) are not discounted to its present value and are determined based on best estimate required to settle the obligation at the balance sheet date. These are reviewed at each balance sheet date and adjusted to reflect the current best estimates. Contingent liabilities are not recognised in the financial statements. A contingent asset is neither recognised nor disclosed in the financial statements.

Annexure V- Notes to Restated Financial Information

(Amount in ₹ lakhs, except for share data unless otherwise stated)

Note 1 Share capital

Particulars	As at 31st March 2026	As at 31st March 2025	As at 31st March 2024
Authorised:			
Number of shares	1,39,00,000	8,90,000	4,90,000
Equity shares of ₹10 each (PY ₹. 100 each)	1,390.00	890.00	490.00
Number of Preference shares	-	50,000	50,000
Preference shares of ₹ Nil each fully paid up (PY ₹1000 each)	-	500.00	500.00
Issued:			
Number of Equity shares	49,00,000	4,90,000	4,90,000
Equity shares of ₹10 each fully paid up (PY ₹100 each)	490.00	490.00	490.00
Number of Preference shares	-	50,000	50,000
Preference shares of ₹ Nil each fully paid up (PY ₹ 1000 each)	-	500.00	500.00
Subscribed & Paid up			
Number of Equity shares	49,00,000	4,90,000	4,90,000
Equity shares of ₹10 each fully paid up (PY ₹ 100 each)	490.00	490.00	490.00
Number of Preference shares	-	50,000	50,000
Preference shares of ₹ Nil each fully paid up (PY ₹1000 each)	-	500.00	500.00

a) Rights, preferences and restrictions attached to shares

The Company has a single class of equity shares. Accordingly, all equity shares rank equally with regard to dividends and share in the Company's residual assets. The equity shares are entitled to receive dividend as declared from time to time. The voting rights of an equity shareholder are in proportion to its share of the paid-up equity capital of the Company. Voting rights cannot be exercised in respect of shares on which any call or other sums presently payable have not been paid.

b) Reconciliation of the number of shares outstanding at the beginning and end of the reporting year:

Equity Shares

Particulars	As at 31 March 2026	As at 31 March 2025	As at 31 March 2024
Balance at the beginning of the year	4,90,000	4,90,000	10,000
Add: Changes during the year*	44,10,000	-	4,80,000
Balance at the end of the year	**49,00,000**	**4,90,000**	**4,90,000**

***Note:**

During the Financial year 25-26, the Company has sub-divided its equity shares pursuant to the approval of shareholders at the meeting held on 29/01/2026. Each equity share having a face value of ₹100 has been sub-divided into 10 equity shares having a face value of ₹10 each, with effect from 29/01/2026.

Accordingly, a shareholder holding 1 equity share of ₹100 is entitled to 10 equity shares of ₹10 each post sub-division. There is no change in the total paid-up share capital of the Company.

Earnings Per Share (EPS) for the previous years has been restated in accordance with AS 20 to give effect to the sub-division.

.

.

Preference shares			
Particulars	**As at 31 March 2026**	**As at 31 March 2025**	**As at 31 March 2024**
Balance at the beginning of the year	50,000	50,000	-
Add: Changes during the year*	(50,000)	-	50,000
Balance at the end of the year	**-**	**50,000**	**50,000**
***Note:**			
During the current financial year, the Company has fully redeemed all its outstanding preference shares in accordance with the terms of issue and the provisions of the Companies Act, 2013. Consequently, no preference shares remain outstanding as at the reporting date.			

c) Details of shareholders holding more than 5 % of equity shares in the Company:			
Name of Shareholder	**As at**		
	31 March 2026	**31 March 2025**	**31 March 2024**
Dipali Dattatraya Kulkarni	38,50,000	3,85,000	3,85,000
% Holding	78.57%	78.57%	78.57%
Dattatray Kashinath Kulkarni	10,49,950	5,000	5,000
% Holding	21.43%	1.02%	1.02%
Dinesh M. Kulkarni	-	1,00,000	1,00,000
% Holding	0.00%	20.41%	20.41%

d) Shareholding of Promoters			
Shares held by promoters at the end of the year	*As at 31 March 2026*		
Promoter's name	**No. of Shares**	**% of total shares**	**% change during the period**
Dattatray Kashinath Kulkarni	10,49,950	21.43%	20.41%
Dipali Dattatraya Kulkarni	38,50,000	78.57%	0.00%
Shares held by promoters at the end of the year	*As at 31 March 2025*		
Promoter's name	**No. of Shares**	**% of total shares**	**% change during the period**
Dattatray Kashinath Kulkarni	5,000	1.02%	0.00%
Dipali Dattatraya Kulkarni	3,85,000	78.57%	0.00%
Shares held by promoters at the end of the year	*As at 31 March 2024*		
Promoter's name	**No. of Shares**	**% of total shares**	**% change during the period**
Dattatray Kashinath Kulkarni	5,000	1.02%	0.00%
Dipali Dattatraya Kulkarni	3,85,000	78.57%	0.00%

e. During the period of 5 years immediately preceding the date as at which the Restated Statement of Assets and Liabilities are prepared:
- No class of shares were allotted as fully paid up pursuant to contract without payment being received in cash. - No class of shares were bought back by the Company

(Rest of the page is intentionally left blank)

.

Note 2 Reserves and surplus			
Particulars	**As at 31 March 2026**	**As at 31 March 2025**	**As at 31 March 2024**
a) Capital Redemption Reserve			
Balance as per the last financial statements	-	-	-
Add: Addition during the year	500.00	-	-
Balance as per end of the year (A)	**500.00**	**-**	**-**
b) Surplus in Profit and Loss Account			
Balance as per the last financial statements	857.78	308.13	-
Add / Less: Profit / (Loss) for the year	1,159.22	549.66	308.13
Less: Transfer to CRR on Redemption of Preference Shares	(500.00)	-	-
Balance as per end of the year	**1,517.01**	**857.78**	**308.13**
Total (a+b)	**2,017.01**	**857.78**	**308.13**

Note 3 Borrowings (Refer Note 34 for terms and security details)			
3a Long-term borrowings			
Particulars	**As at 31 March 2026**	**As at 31 March 2025**	**As at 31 March 2024**
Secured Loan			
- From bank and financial institutions	3,419.39	3,025.53	3,988.37
	3,419.39	**3,025.53**	**3,988.37**
Total	**3,419.39**	**3,025.53**	**3,988.37**
3b Short-term borrowings			
Particulars	**As at 31 March 2026**	**As at 31 March 2025**	**As at 31 March 2024**
Secured Loan			
- Current maturities of long term borrowings	572.23	642.00	611.63
- From bank and financial institutions	2,482.04	2,521.16	3,035.01
	3,054.27	**3,163.16**	**3,646.64**
Unsecured Loan			
- Current maturities of long term borrowings	-	-	-
- From related parties	2,521.71	1,086.89	10.25
	2,521.71	**1,086.89**	**10.25**
Total	**5,575.98**	**4,250.05**	**3,656.89**
The above amount includes:			
Secured Borrowings	6,473.66	6,188.69	7,635.01
Unsecured Borrowings	2,521.71	1,086.89	10.25

Note 4 Long term provisions			
Particulars	**As at 31 March 2026**	**As at 31 March 2025**	**As at 31 March 2024**
Provision for employee benefits			
Provision for gratuity	9.11	4.87	2.04
Total	**9.11**	**4.87**	**2.04**

.

Note 5 Trade payables			
Particulars	**As at 31 March 2026**	**As at 31 March 2025**	**As at 31 March 2024**
For Goods & Services			
- Micro, small and medium enterprises	29.65	46.08	-
- Others	1,674.97	1,279.72	2,415.36
	1,704.62	**1,325.80**	**2,415.36**
For Trade Payables Ageing, refer Notes to Accounts- Note 35			
The information required to be disclosed under the Micro, Small and Medium Enterprises Development Act, 2006 (herein after referred to as "MSMED Act, 2006") has been determined to the extent such parties have been identified on the basis of information available with the Company. The same has been relied upon by the auditors. The amount of principal and interest outstanding during the year is given:			
Particulars	**As at 31 March 2026**	**As at 31 March 2025**	**As at 31 March 2024**
a) The principal amount and the interest due thereon remaining unpaid to any supplier as at the end of each accounting year			
- Principal amount due to micro and small enterprises	29.65	46.08	-
- Interest due on above	-	-	-
b) The amount of interest paid by the buyer in terms of section 16 of the MSMED Act, 2006 along with the amounts of the payment made to the supplier beyond the appointed day during each accounting year	-	-	-
c) The amount of interest due and payable for the period of delay in making payment (which have been paid but beyond the appointed day during the year) but without adding the interest specified under MSMED Act, 2006	-	-	-
d) The amount of interest accrued and remaining unpaid at the end of each accounting year;	-	-	-
e) The amount of further interest remaining due and payable even in the succeeding years, until such date when the interest dues as above are actually paid to the small enterprise for the purpose of disallowance as a deductible expenditure under section 23 of the MSMED Act, 2006.	-	-	-
Total	**29.65**	**46.08**	**-**

(Rest of the page is intentionally left blank)

Note 6 Other current liabilities			
Particulars	**As at 31 March 2026**	**As at 31 March 2025**	**As at 31 March 2024**
Statutory dues			
- TDS	21.70	0.53	13.79
- TCS	1.30	0.54	0.40
- Professional Tax payable	0.26	0.28	2.39
- Provident Fund	3.40	2.47	2.39
- ESIC	0.05	-	-
- GST	-	36.27	-
Security deposit			
Advance from Harvesting and Transport Contractors	-	42.73	-
Advance from Sugarcane Producers	86.18	189.80	-
Advance from Contractors	2.55	3.78	5.04
Audit fees payable	5.49	5.00	7.64
Salary payable	53.33	47.54	43.60
Advance from customers	689.79	531.18	-
Other payables	2.45	2.45	2.45
Total	**866.50**	**862.57**	**77.70**

Note 7 Short term provisions			
Particulars	**As at 31 March 2026**	**As at 31 March 2025**	**As at 31 March 2024**
Provision for employee benefit expense:			
Provision for gratuity	0.36	0.26	0.01
Provision for income tax (Net of TDS, TCS and advance tax)	154.97	-	-
Total	**155.32**	**0.26**	**0.01**

(Rest of the page is intentionally left blank)

Note 8 Property, plant and equipment

PARTICULARS	Building	Plant and Equipment	Furniture and Fixtures	Office equipment	Computers	Total
As at 31 March 2026						
GROSS CARRYING AMOUNT						
Opening gross carrying amount	1,050.77	4,668.09	38.30	3.06	28.09	**5,788.31**
Additions	242.63	1,111.17	6.72	15.95	1.25	**1,377.72**
Disposals/Adjustment	-	-	-	-	-	**-**
Closing Gross Carrying Amount	**1,293.40**	**5,779.26**	**45.02**	**19.01**	**29.34**	**7,166.03**
ACCUMULATED DEPRECIATION						
Opening accumulated depreciation	38.36	253.82	4.04	0.52	10.01	**306.75**
Depreciation charged during the year	27.35	132.55	2.51	3.16	9.76	**175.33**
Disposals/Adjustments	-	-	-	-	-	**-**
Closing Accumulated Depreciation	**65.71**	**386.37**	**6.55**	**3.68**	**19.77**	**482.08**
Net Carrying Amount	**1,227.69**	**5,392.89**	**38.47**	**15.33**	**9.57**	**6,683.95**

PARTICULARS	Building	Plant and Equipment	Furniture and Fixtures	Office equipment	Computers	Total
As at 31 March 2025						
GROSS CARRYING AMOUNT						
Opening gross carrying amount	941.27	4,432.04	31.37	0.64	21.26	**5,426.58**
Additions	109.50	236.05	6.93	2.42	6.83	**361.73**
Disposals/Adjustment	-	-	-	-	-	**-**
Closing Gross Carrying Amount	**1,050.77**	**4,668.09**	**38.30**	**3.06**	**28.09**	**5,788.31**
GROSS CARRYING AMOUNT						
ACCUMULATED DEPRECIATION						
Opening accumulated depreciation	13.47	129.63	1.95	0.07	2.66	**147.78**
Depreciation charged during the year	24.89	124.19	2.09	0.45	7.35	**158.97**
Disposals/Adjustments	-	-	-	-	-	-
Closing Accumulated Depreciation	**38.36**	**253.82**	**4.04**	**0.52**	**10.01**	**306.75**
Net Carrying Amount	**1,012.41**	**4,414.27**	**34.26**	**2.54**	**18.08**	**5,481.56**

PARTICULARS	Building	Plant and Equipment	Furniture and Fixtures	Office equipment	Computers	Total
As at 31 March 2024						
GROSS CARRYING AMOUNT						
Opening gross carrying amount	-	-	-	-	-	**-**
Transfer from CWIP	779.02	3,432.47	0.44	0.44	4.70	**4,217.07**
Additions	162.25	999.57	30.93	0.20	16.56	**1,209.51**
Disposals/Adjustment	-	-	-	-	-	**-**
Closing Gross Carrying Amount	**941.27**	**4,432.04**	**31.37**	**0.64**	**21.26**	**5,426.58**
ACCUMULATED DEPRECIATION						
Opening accumulated depreciation	-	-	-	-	-	**-**
Depreciation charged during the year	13.47	129.63	1.95	0.07	2.66	**147.78**
Disposals/Adjustments	-	-	-	-	-	**-**
Closing Accumulated Depreciation	**13.47**	**129.63**	**1.95**	**0.07**	**2.66**	**147.78**
Net Carrying Amount	**927.80**	**4,302.41**	**29.42**	**0.57**	**18.60**	**5,278.80**

#During the FY 2024-25, the management has reassessed the useful life of certain items of Property, Plant and Equipment based on technical evaluation, usage patterns, and past experience. Based on such reassessment, the useful life of these assets has been revised. This revision has been considered as a change in accounting estimate in accordance with the applicable accounting standards and has been applied prospectively.

Note 8.1 Capital work-in-progress

Particulars	CWIP
Balance as at 01 April 2023	4,217.08
Additions	193.22
Transfer to PPE	4,217.08
Balance as at 31 March 2024	**193.22**
Additions	73.76
Disposals/ Adjustments	-
Balance as at 31 March 2025	**266.98**
Additions	-
Disposals/ Adjustments	266.98
Balance as at 31 March 2026	**-**

.

(For CWIP Ageing, refer Notes to Accounts- Note 37)

-During the year ended March 31, 2026, 2025 and 2024, the Company has capitalised borrowing costs amounting to ₹ Nil, ₹ Nil, and ₹ 608.73 Lakhs to Capital Work-in-Progress/Property, Plant and Equipment.

.

.

Note 9 Non-current investments			
Particulars	**As at 31 March 2026**	**As at 31 March 2025**	**As at 31 March 2024**
Unquoted Other Investments in Equity Instruments	52.25	47.20	48.20
Other non-current investments			
-Term deposit with bank	1.00	1.00	601.00
Total	**53.25**	**48.20**	**649.20**

Note 10 Deferred tax balances (Net)			
Particulars	**As at 31 March 2026**	**As at 31 March 2025**	**As at 31 March 2024**
Opening balance	204.84	39.15	-
(DTA)/DTL for the year	143.71	165.68	39.15
Closing Balance of Deferred Tax (Asset)/ Liability	**348.54**	**204.84**	**39.15**

Note 11 Other non-current assets			
Particulars	**As at 31 March 2026**	**As at 31 March 2025**	**As at 31 March 2024**
Unsecured, Considered Good, unless otherwise stated			
Prepaid expenses	38.20	78.49	-
Fixed Deposit	305.50	-	-
Total	**343.70**	**78.49**	**-**

Note 12 Inventories			
Particulars	**As at 31 March 2026**	**As at 31 March 2025**	**As at 31 March 2024**
(At lower of cost and net realisable value)			
Finished Goods	5,585.20	4,801.22	4,715.61
Total	**5,585.20**	**4,801.22**	**4,715.61**

Note 13 Trade receivables			
Particulars	**As at 31 March 2026**	**As at 31 March 2025**	**As at 31 March 2024**
Unsecured			
-Considered good	723.56	14.89	266.69
Less :			
Provision for doubtful debts	-	-	-
Total	**723.56**	**14.89**	**266.69**
For Trade Receivable Ageing, refer Notes to Accounts- Note 36			

Note 14 Cash and cash equivalents			
Particulars	**As at 31 March 2026**	**As at 31 March 2025**	**As at 31 March 2024**
Cash on hand	46.07	40.76	5.61
Balances with banks			
- In Current Accounts	73.55	60.95	7.61
- In Deposit Account	-	-	-
Total	**119.62**	**101.71**	**13.22**

.

Note 15 Short term loans and advances			
Particulars	**As at 31 March 2026**	**As at 31 March 2025**	**As at 31 March 2024**
Unsecured, Considered Good, unless otherwise stated			
Advances Given			
- Employees	45.39	56.45	41.34
- Contractors	87.07	165.98	23.07
- Sugarcane Growers	9.55	-	-
- Suppliers	88.60	84.08	-
- Related Parties	-	0.20	0.20
- Others	5.33	5.33	5.33
Total	**235.94**	**312.04**	**69.94**

Note 16 Other current assets			
Particulars	**As at 31 March 2026**	**As at 31 March 2025**	**As at 31 March 2024**
Unsecured, Considered Good, unless otherwise stated			
Balance with revenue authorities	102.90	27.81	158.10
Security deposit	16.64	12.84	12.75
Prepaid IPO expenses	26.62	-	-
Prepaid expenses	5.10	5.82	2.46
Government grant receivable	578.43	296.64	54.66
Interest Receivable on Investment	15.82	-	7.21
Store material	86.84	63.03	55.79
Bank charges receivable	8.90	-	-
Other receivables	-	10.47	-
Total	**841.25**	**416.61**	**290.97**

Note 17 Revenue from operations			
Particulars	**For the year ended**		
	31 March 2026	**31 March 2025**	**31 March 2024**
Sale of products	7,526.77	5,856.63	3,627.64
-Finished Goods			
Jaggery Powder Sale	6,493.78	5,079.33	3,299.58
Jaggery Premix Sale	95.33	439.65	-
Khandsari Sugar Sale	85.21	-	-
Sugaecane Seed Sale	566.34	-	-
-By-products			
Bagasse Sale	132.69	124.15	322.48
Boiler Ash Sale	4.63	1.79	0.32
Molasses Sale	133.35	198.12	-
Pressmud Sale	15.44	13.51	5.27
Scrap Sale	-	0.09	-
Total	**7,526.77**	**5,856.63**	**3,627.64**
Sale of products	7,526.77	5,856.63	3,627.64

(Rest of the page is intentionally left blank)

.

Note 18 Other income			
Particulars	**For the year ended**		
	31 March 2026	**31 March 2025**	**31 March 2024**
Interest income	19.58	12.12	8.15
Dividend income	3.49	2.06	-
Government grant	281.79	241.98	54.66
Total	**304.86**	**256.16**	**62.81**

Note 19 Cost of Material Consumed			
Particulars	**For the year ended**		
	31 March 2026	**31 March 2025**	**31 March 2024**
Raw material			
Opening stock	-	-	-
Add: Sugarcane Purchase	3689.12	2,671.08	5,065.12
Add: H&T cost	1447.76	867.72	1,568.45
Less: Closing stock	-	-	-
Total	**5,136.88**	**3,538.80**	**6,633.57**

Note 20 Manufacturing Expenses			
Particulars	**For the year ended**		
	31 March 2026	**31 March 2025**	**31 March 2024**
Manufacturing expenses	266.01	253.10	375.92
Total	**266.01**	**253.10**	**375.92**

Note 21 Changes in inventories of finished goods, work-in-progress and stock-in-trade			
Particulars	**For the year ended**		
	31 March 2026	**31 March 2025**	**31 March 2024**
Inventories at the beginning of the year			
Finished Goods	4,801.22	4,715.61	-
Inventories at the end of the year			
Finished Goods	5,585.20	4,801.22	4,715.61
Total	**(783.98)**	**(85.61)**	**(4,715.61)**

Note 22 Employee benefit expenses			
Particulars	**For the year ended**		
	31 March 2026	**31 March 2025**	**31 March 2024**
Salaries and wages			
- Compensation to employees	436.78	369.77	283.17
- Remuneration to directors	-	-	-
Contribution to provident fund	21.01	15.68	8.21
ESIC	0.05	-	-
Gratuity expenses	4.34	3.09	2.05
Staff welfare expenses	1.37	0.54	0.60
Total	**463.55**	**389.08**	**294.03**

.

Note 23 Finance cost			
Particulars	**For the year ended**		
	31 March 2026	**31 March 2025**	**31 March 2024**
Interest expenses	588.71	783.44	413.08
Other borrowing costs	97.25	18.09	47.83
Total	**685.96**	**801.53**	**460.91**

Note 24 Depreciation & amortization expense			
Particulars	**For the year ended**		
	31 March 2026	**31 March 2025**	**31 March 2024**
Depreciation expense	175.33	158.97	147.79
Total	**175.33**	**158.97**	**147.79**

Note 25 Other expenses			
Particulars	**For the year ended**		
	31 March 2026	**31 March 2025**	**31 March 2024**
Audit remuneration (Refer *Note below*)	7.20	6.04	5.00
Administrative Expenses	14.00	5.88	6.48
Advertisement	15.20	0.25	-
Annual AMC Charges	1.80	-	-
Consultancy fees	27.10	33.54	19.23
Contractor service charges	13.39	-	-
CSR expenses	7.39	-	-
GST Expense	48.19	73.87	-
Guest house exps	1.90	0.01	-
Insurance	6.91	7.38	2.18
Grampanchyat Tax	1.15	1.63	-
Late Filling & Interest Exp	0.24	-	-
Legal & Professional Expenses	-	0.76	2.00
Miscellaneous expenses	18.47	40.13	19.64
Nursary Tray Expenses	6.02	-	-
Parcel & Courier Expenses	0.41	0.02	-
Printing & Stationary Expenses	3.81	1.61	4.09
Rates and taxes	34.47	13.53	16.70
Rent	64.55	70.80	37.96
Repairs to buildings	0.80	0.70	1.15
Repairs to machinery	4.13	4.86	3.37
ROC Fees	0.59	3.93	-
Selling & Distribution Expenses	9.20	16.59	4.25
Telephone Expenses	1.15	1.73	1.80
Travelling Expenses	12.77	5.62	6.75
Total	**300.84**	**288.88**	**130.60**

Note 25A Audit remuneration			
Particulars	**For the year ended**		
	31 March 2026	**31 March 2025**	**31 March 2024**
- For statutory audit	7.00	5.00	5.00
- For tax audit	0.20	0.10	-
- For other services	-	0.94	-
Total	**7.20**	**6.04**	**5.00**

Note 26 Tax expense			
Particulars	**For the year ended**		
	31 March 2026	**31 March 2025**	**31 March 2024**
Current tax:			
- Current year	284.11	53.25	15.96
- Earlier year	-	(0.55)	-
Deferred tax:			
- Attributable to origination and reversal of temporary differences	143.71	165.68	39.15
Total tax expense recognized	**427.82**	**218.38**	**55.11**

Note 27 Earnings per share			
Note 27A Earnings per share *(pre-bonus issue)*			
Particulars	**For the year ended**		
	31 March 2026	**31 March 2025**	**31 March 2024**
(i) Profit for basic/diluted earning per share of face value of ₹ 10 each			
Profit/ Loss for the year	1,159.22	549.66	308.13
(ii) Calculation of Weighted average number of equity shares for (basic and diluted)*			
Number of equity shares at the beginning and end of the period/year	49,00,000	49,00,000	49,00,000
Earnings per share [nominal value of ₹ 10 per share]			
- Basic	23.66	11.22	6.29
- Diluted	23.66	11.22	6.29
*Note: During the Financial year 25-26, the Company has sub-divided its equity shares pursuant to the approval of shareholders at the meeting held on 29/01/2026. Each equity share having a face value of ₹100 has been sub-divided into 10 equity shares having a face value of ₹10 each, with effect from 29/01/2026. Accordingly, a shareholder holding 1 equity share of ₹100 is entitled to 10 equity shares of ₹10 each post sub-division. There is no change in the total paid-up share capital of the Company. Earnings Per Share (EPS) for the previous years has been restated in accordance with AS 20 to give effect to the sub-division.			

Note 27B Earnings per share *(post-bonus issue)*			
Particulars	**For the year ended**		
	31 March 2026	**31 March 2025**	**31 March 2024**
(i) Profit for basic/diluted earning per share of face value of ₹ 10 each			
Profit/ Loss for the year	1,159.22	549.66	308.13
(ii) Calculation of Weighted average number of equity shares for (basic and diluted)*			
Number of equity shares at the beginning and end of the year	1,22,50,000	1,22,50,000	1,22,50,000
Earnings per share [nominal value of ₹ 10 per share]			
- Basic	9.46	4.49	2.52
- Diluted	9.46	4.49	2.52
* Note: Subsequent to year ended March 2026, the Company has issued 73,50,000 equity shares of ₹ 10 each as bonus shares in ratio of 3:2 to the existing equity shareholders. This has been approved by Board on June 23, 2026 and Shareholders on June 24, 2026. Impact of the same has been considered in the calculation of Basic and Diluted EPS retrospectively for year ended March 31, 2026, March 31, 2025 and March 31, 2024.			

Note 28 Statement Of Related Party Transaction

1. Names of the related parties with whom transaction were carried out during the years and description of relationship:

Sr. No.	Name	Description of Relationship
1	Dattatray Kashinath Kulkarni	Director
2	Dipali Dattatray Kulkarni	Director
3	Shree Siddhivinayak Foodtech Farmer Producer Company	Director and Promoter of the company holds share in the said company
4	Shree Siddhivinayak Agritech Industries Limited	Director and Promoter of the company holds share in the said company
5	Shree Siddhivinayak Social Foundation	Director and Promoter of the company holds share in the said company
6	Ganesh Kamate	SMP
7	Mangesh Prabhakar Kulkarni	Relative of Director
8	Shri Siddhivinayak Petroleum	Proprietorship of Director

2. Transaction with Related Parties

Sr. No.	Nature of Transaction	For the year ended		
		31 March 2026	31 March 2025	31 March 2024
1	**Rent paid**			
	Dattatray Kashinath Kulkarni (including GST)	54.60	26.36	16.40
	Dipali Dattatray Kulkarni (Vehicle rent)	7.20	1.20	-
2	**Rent Deposit**			
	Dattatray Kashinath Kulkarni	-	-	11.00
3	**Purchases**			
	Shri Siddhivinayak Petroleum	10.99	0.06	11.72
	Shree Siddhivinayak Agritech Industries Limited	-	-	340.16
4	**Sale**			
	Shree Siddhivinayak Foodtech Farmer Producer Company	-	162.00	336.00
5	**H&T Bill**			
	Dipali Dattatray Kulkarni	49.88	15.25	41.54
	Ganesh Kamate	16.04	11.16	31.01
	Mangesh Prabhakar Kulkarni	9.66	-	-
6	**Unsecured loan taken**			
	Dattatray Kashinath Kulkarni	-	400.00	250.25
	Dipali Dattatray Kulkarni	3,183.51	1,292.37	2,960.30
	Shree Siddhivinayak Agritech Industries Limited	920.78	864.74	918.88
7	**Loans Repaid**			
	Dattatray Kashinath Kulkarni	1.15	0.50	240.00
	Dipali Dattatray Kulkarni	1,747.54	615.23	3,348.21
	Shree Siddhivinayak Agritech Industries Limited	920.78	864.74	918.88
8	**Salary**			
	Ganesh Kamate	7.39	6.18	4.82
9	**CSR Expenses**			
	Shree Siddhivinayak Social Foundation	7.39	-	-
10	**Staff Advance**			
	Ganesh Kamate	(3.27)	2.49	0.30

3. Balances Outstanding at the end of the Year				
Sr. No.	Particulars	As at		
		31 March 2026	31 March 2025	31 March 2024
1	**Rent paid**			
	Dattatray Kashinath Kulkarni	10.95	(3.08)	2.17
	Dipali Dattatray Kulkarni (Vehicle rent)	0.63	0.23	-
2	**Rent Deposit**			
	Dattatray Kashinath Kulkarni	11.00	11.00	11.00
3	**Purchases**			
	Shri Siddhivinayak Petroleum	-	(1.15)	0.82
	Shree Siddhivinayak Agritech Industries Limited	-	-	302.38
4	**Sale**			
	Shree Siddhivinayak Foodtech Farmer Producer Company	-	(88.75)	256.39
5	**H&T Bill**			
	Dipali Dattatray Kulkarni	-	(5.95)	9.13
	Ganesh Kamate	(0.34)	0.89	3.12
	Mangesh Prabhakar Kulkarni	9.56	-	-
6	**Unsecured loan taken**			
	Dattatray Kashinath Kulkarni	408.60	409.75	10.25
	Dipali Dattatray Kulkarni	2,113.11	677.14	-
7	**Factory Work Advances**			
	Dipali Dattatray Kulkarni	-	0.20	0.20
8	**Salary**			
	Ganesh Kamate	0.76	0.63	0.77
9	**Staff Advance**			
	Ganesh Kamate	-	3.27	0.78

(Rest of the page is intentionally left blank)

.

Note 29 Statement of Deferred tax (assets) / Liabilities as restated:				
Particulars		**As at**		
		31 March 2026	**31 March 2025**	**31 March 2024**
A	WDV as per Companies Act, 2013	6,683.95	5,481.56	5,278.80
B	WDV as per Income tax Act, 1961	5,274.20	4,651.64	5,039.53
	Difference in WDV (A-B)	1,409.75	829.92	239.27
	Normal Tax Rate Applicable %	25.17%	25.17%	17.16%
C	**Deferred Tax (Asset)/ Liability (C)**	**354.81**	**208.87**	**41.06**
	43B/40A(ia) disallowance	-	1.50	1.50
	Provision for Bonus	15.41	9.41	7.56
	Provision for Gratuity	9.47	5.13	2.05
D	Total	24.88	16.04	11.11
E	**Deferred Tax (Asset)/ Liability (E)**	**(6.26)**	**(4.04)**	**(1.91)**
F	**Total Deferred Tax (Asset)/ Liability (C+E)**	**348.54**	**204.84**	**39.15**
Restated Consolidated Closing Balance of Deferred Tax (Asset)/ Liability		**348.54**	**204.84**	**39.15**
Deferred Tax (Assets)/ Liability as per Balance sheet of Previous Year		**204.84**	**39.15**	**-**
Deferred Tax (Assets)/ Liability should be charged to Profit & Loss		**143.71**	**165.68**	**39.15**

Note 30 Statement of Capitalisation		
Particulars	**Pre Issue**	**Post Issue**
	31 March 2026	
Debt		
Short Term Debt	5,003.75	[●]
Long Term Debt	3,991.62	
Total Debt	**8,995.37**	
Shareholders' Fund (Equity)		
Share Capital	490.00	
Reserves & Surplus	2,017.01	
Less: Miscellaneous Expenses not w/off	-	
Total Shareholders' Fund (Equity)	**2,507.01**	
Long Term Debt/Equity	**1.59**	
Total Debt/Equity	**3.59**	

Notes:

1. Short term debts represents the debts which are expected to be paid/payable within 12 months and excludes instalment of term loans repayable within 12 months.
2. Long term debts represent debts other than Short term debts as defined above but includes instalment of term loans repayable within 12 months grouped under Short term debt.
3. The figures disclosed above are based on restated statement of assets and liabilities of the Company as at March 31, 2026. Effect of Increase in Capital after March 31, 2026 not taken.

(Rest of the page is intentionally left blank)

Note 31 Statement of Mandatory Accounting Ratios

Particulars	As at		
	31 March 2026	31 March 2025	31 March 2024
Net worth (A)	2,507.01	1,847.78	1,298.13
Earnings Before Interest, Tax, Depreciation and Amortisation (EBITDA)	2,046.22	1,454.29	861.30
Restated profit after tax (B)	1,159.22	549.66	308.13
Number of equity share outstanding as on the end of year (C)- *Refer Note 1*	49,00,000	4,90,000	4,90,000
Weighted average number of equity shares outstanding during the year (D)- *Refer Note 1**	49,00,000	49,00,000	49,00,000
Weighted average number of diluted equity shares outstanding during the year (E) - Refer Note 1*	49,00,000	49,00,000	49,00,000
Basic earning per share (₹) (B/D)	23.66	11.22	6.29
Diluted earning per share (₹) (B/E)	23.66	11.22	6.29
Return on net worth (%) (B/A)	46.24%	29.75%	23.74%
Net asset value per share - (A/C) (Face value of ₹ 10 each)	51.16	377.10	264.92

Note:
1) The ratios have been computed as below:

(a) Basic earnings per share (₹): Net profit after tax as restated for calculating basic EPS/ Weighted average number of equity shares outstanding after taking effect of split at the end of the year

(b) Diluted earnings per share (₹): Net profit after tax as restated for calculating diluted EPS/ Weighted average number of equity shares outstanding after taking effect of split at the end of the year for diluted EPS

(c) Return on net worth (%) : Net profit after tax (as restated)/ Net worth at the end of the year

(d) Net assets value per share: Net Worth at the end of the year/ Total number of equity shares outstanding at the end of the year

2) Weighted average number of equity shares is the number of equity shares outstanding at the beginning of the year adjusted by the number of equity shares issued during the year multiplied by the time weighting factor after considering split effect. The time weighting factor is the number of days for which the specific shares are outstanding as a proportion of total number of days during the year.

3) Net worth for ratios mentioned in note 1(c) and 1(d) is = Equity share capital + Reserves and surplus (including, Securities Premium, General Reserve and surplus in statement of profit and loss).

4) The figures disclosed above are based on the restated summary statements of the Company.

5) EBITDA has been calculated as Profit before tax + Depreciation + Interest Expenses - Other Income

***Note:**
During the Financial year 25-26, the Company has sub-divided its equity shares pursuant to the approval of shareholders at the meeting held on 29/01/2026. Each equity share having a face value of ₹100 has been sub-divided into 10 equity shares having a face value of ₹10 each, with effect from 29/01/2026.

Accordingly, a shareholder holding 1 equity share of ₹100 is entitled to 10 equity shares of ₹10 each post sub-division. There is no change in the total paid-up share capital of the Company.

Earnings Per Share (EPS) for the previous years has been restated in accordance with AS 20 to give effect to the sub-division.

Ratio Post Bonus

Subsequent to year ended March 2026, The Company has issued 73,50,000 Equity Shares of ₹ 10 each pursuant to resolution date 24th June 2026, through a bonus share issue in the ratio of 3:2 of existing equity share capital, bonus share issued via audited March 31, 2026 general reserve of the company hence adjustments were made to ratios presented below, adjusted ratio as as below:-

Particulars	As at		
	31 March 2026	31 March 2025	31 March 2024
Net worth (A)	2,507.01	1,847.78	1,298.13
Restated profit after tax (B)	1,159.22	549.66	308.13
Adjusted Number of equity share outstanding as on the end of year - *Refer Note 2*	1,22,50,000	1,22,50,000	1,22,50,000
Adjusted Weighted average number of equity shares outstanding during the year (C) - *Refer Note 2*	1,22,50,000	1,22,50,000	1,22,50,000
Adjusted Weighted average number of diluted equity shares outstanding during the year (D) - *Refer Note 2*	1,22,50,000	1,22,50,000	1,22,50,000
Adjusted Basic earning per share (₹) (B/C)	9.46	4.49	2.52
Adjusted Diluted earning per share (₹) (B/D)	9.46	4.49	2.52
Adjusted Net asset value per share - (A/C) (Face value of ₹ 10 each)	20.47	15.08	10.60

Note -2) The adjusted ratios have been computed as below:

(a) Basic earnings per share (₹): Net profit after tax, as restated for calculating basic EPS / Adjusted Weighted average number of equity shares outstanding at the end of the year

(b) Diluted earnings per share (₹): Net profit after tax, as restated for calculating diluted EPS /Adjusted Weighted average number of equity shares outstanding at the end of the year

(c) Net assets value per share (₹) -: Net Worth at the end of the period or year / Adjusted Total number of equity shares outstanding at the end of the year

(d) Net worth has been calculated as sum of Equity Share Capital and Reserves and surplus (comprising of Securities Premium and Surplus of Profit and Loss Account)

(Rest of the page is intentionally left blank)

Note 32 Financial ratios

Particulars	Unit of measurement	Numerator	Denominator	As at		% Change	Reason for variation more than 25%
				31 March 2026	31 March 2025	FY 26 - FY 25	FY 26 - FY 25
Current ratio	Times	Current assets	Current liabilities	0.90	0.88	3.09%	Variation is less than 25%
Debt equity ratio	Times	Total debt (including current maturities of long term borrowings)	Net worth	3.59	3.94	-8.87%	Variation is less than 25%
Debt service coverage ratio	Times	Earnings for debt service = Net profit after taxes + Non-cash operating expenses + Interest expense	Debt service = Interest & lease payments + principal repayments	0.39	0.34	14.26%	Variation is less than 25%
Return on equity ratio	Percentage	Net profits after taxes	Average net worth	53.24%	34.94%	52.35%	Variation due to increase in PAT and Equity
Inventory turnover ratio	Times	Revenue from operations	Average inventory	1.45	1.23	17.76%	Variation is less than 25%
Trade receivable turnover ratio	Times	Revenue from operations	Average trade receivable	20.39	41.60	-50.99%	Variation due to increase in both Revenue and Avg. Trade receivables
Trade payable turnover ratio	Times	Total purchases	Average trade payables	2.43	1.43	70.51%	Variation due to increase in purchases and decrease in Avg trade payables
Net capital turnover ratio	Times	Revenue from operations	Working capital = current assets – current liabilities	(9.45)	(7.39)	27.77%	Variation due to increase in Revenue
Net profit ratio	Percentage	Net profit after tax	Revenue from operations	15.40%	9.39%	64.10%	Variation due to increase in both Revenue and PAT
Return on capital employed	Percentage	Earnings before interest and taxes	Capital employed = net worth + total debt	19.76%	17.20%	14.86%	Variation is less than 25%
Return on investment	Percentage	Net profit after tax	Total Asset	NA	NA	NA	NA

Particulars	Unit of measurement	Numerator	Denominator	As at		% Change	Reason for variation more than 25%
				31 March 2025	31 March 2024	FY 25 - FY 24	FY 25 - FY 24
Current ratio	Times	Current assets	Current liabilities	0.88	0.87	0.69%	Variation is less than 25%
Debt equity ratio	Times	Total debt (including current maturities of long term borrowings)	Net worth	3.94	5.89	-33.14%	Variation due to decrease in debt and increase in Equity
Debt service coverage ratio	Times	Earnings for debt service = Net profit after taxes + Non-cash operating expenses + Interest expense	Debt service = Interest & lease payments + principal repayments	0.34	0.24	44.97%	Variation due to increase in Earnings
Return on equity ratio	Percentage	Net profits after taxes	Average net worth	34.94%	47.11%	-25.82%	Variation due to increase in Profits
Inventory turnover ratio	Times	Revenue from operations	Average inventory	1.23	0.77	59.99%	Variation due to increase in Revenue
Trade receivable turnover ratio	Times	Revenue from operations	Average trade receivable	41.60	13.60	205.81%	Variation due to increase in Revenue and decrease in Avg. Trade receivables
Trade payable turnover ratio	Times	Total purchases	Average trade payables	1.43	3.60	-60.34%	Variation due to decrease in purchases and increase in Avg trade payables
Net capital turnover ratio	Times	Revenue from operations	Working capital = current assets – current liabilities	(7.39)	(4.57)	61.71%	Variation due to increase in Revenue
Net profit ratio	Percentage	Net profit after tax	Revenue from operations	9.39%	8.49%	10.49%	Variation is less than 25%
Return on capital employed	Percentage	Earnings before interest and taxes	Capital employed = net worth + total debt	17.20%	9.22%	86.69%	Variation due to increase in earnings and Capital employed
Return on investment	Percentage	Net profit after tax	Total Asset	NA	NA	NA	NA

Particulars	Unit of measurement	Numerator	Denominator	As at		% Change	Reason for variation more than 25%
				31 March 2024	31 March 2023	FY 24 - FY 23	FY 24 - FY 23
Current ratio	Times	Current assets	Current Liabilities	0.87	1.61	-45.77%	Variation due to increase in current assets and current liabilities
Debt equity ratio	Times	Total debt (including current maturities of long term borrowings and accrued interest excluding lease liabilities)	Shareholder's Equity	5.89	447.71	-98.68%	Variation due to increase in both debt and Equity
Debt service coverage ratio	Times	Earnings for debt service = Net profit after taxes + Non-cash operating expenses + Interest expense	Debt service = Interest & lease payments + principal repayments	0.24	-	NA	Not applicable as during the FY 22-23 the Company was not having any operations
Return on equity ratio	Percentage	Net profits after taxes	Average Shareholder's Equity	47.11%	-	NA	
Inventory turnover ratio	Times	Revenue from Operations	Average Inventory	0.77	-	NA	
Trade receivable turnover ratio	Times	Net credit sales = Gross credit sales - sales return	Average Trade Receivable	13.60	-	NA	
Trade payable turnover ratio	Times	Total purchases of raw material	Average Trade Payables	3.60	-	NA	
Net capital turnover ratio	Times	Net sales = total sales - sales return	Working capital = Current assets – Current liabilities*	(4.57)	-	NA	
Net profit ratio	Percentage	Net profit after tax	Net sales = Total sales - sales return	8.49%	-	NA	
Return on capital employed	Percentage	Earnings before interest and taxes	Capital Employed = Tangible Net Worth + Total Debt + Deferred Tax	9.22%	-	NA	
Return on investment	Percentage	Net profit after tax	Total Asset	NA	NA	NA	NA

(The rest of the page is intentionally left blank)

Additional notes to Restated Financial Information

Note 33 Statement of Adjustments in the financial statements			
(a) Impact of restatement adjustments			
Below mentioned is the summary of results of restatement adjustments made to the audited financial statements of the respective period/years and its impact on profits.			
Particulars	**As at**		
	31 March 2026	**31 March 2025**	**31 March 2024**
Net profit before tax as per audited financial statements	**1,645.23**	**798.19**	**310.63**
Restatement adjustments:			
Gratuity expenses	-	(3.09)	(2.05)
Government grant	(58.19)	3.53	54.66
GST expenses	-	(30.59)	-
Total	**(58.19)**	**(30.15)**	**52.61**
Restated net profit before tax	**1,587.04**	**768.04**	**363.24**
(a) Reconciliation of restated Equity/ Net worth			
Particulars	**As at**		
	31 March 2026	**31 March 2025**	**31 March 2024**
Equity/ Net worth as per audited financials	**2,507.01**	**1,881.67**	**1,224.82**
Restatement adjustments:			
Provision for Gratuity	-	(5.14)	(2.05)
Accumulated Depreciation	-	(76.71)	-
Government grant	-	58.19	54.66
Deferred tax of earlier years	-	20.36	20.70
GST receivable	-	(30.59)	-
Total	**-**	**(33.89)**	**73.31**
Restated Equity/ Net worth	**2,507.01**	**1,847.78**	**1,298.13**
(b) Explanatory notes for the restatement adjustments			
(i) The amount relating to the income/ expenses have been adjusted in the year to which the same relates to and under which head the same related to.			
(ii) The company has provided excess provision of tax in the year in which income tax return has been filed and has been adjusted in prior period items in financials but in the restated financials it has been adjusted in the same financial year where it relates to.			
(iii) Appropriate adjustments have been made in the restated consolidated financial statements, wherever required, by reclassification of the corresponding item of income, expenses, assets and liabilities, in order to bring them in line with the groupings as per audited financials of the company for all the years.			

(The rest of the page is intentionally left blank)

Note 34 Statement of terms of loans and security details

Name of Lender/Fund	Nature of Facility	Date of Issue/ Renewal	Sanctioned Amount	Securities offered	Re-Payment Period	Rate of Interest	Rate of Interest as on 31 March 2026	Type of Interest	Outstanding amount (as per Books)
Secured Loans									
HDFC Bank-106	Term Loan	05-03-2026	3,672.00	Refer note 1	70 months	8.75 % p.a.	8.50% p.a.	Floating	3,200.97
HDFC Bank-217	Term Loan	05-03-2026	850.50	Refer note 1	84 months	9.00 % p.a.	9.00% p.a.	Fixed	790.65
				Total					**3,991.62**
Cash Credit:									
HDFC Bank	Cash Credit	05-03-2026	400.00	Refer note 1	12 months	8.75 % p.a.		Floating	399.66
HDFC Bank	Seasonal Cash Credit	05-03-2026	500.00	Refer note 1	07 Months	8.75 % p.a.		Floating	0.00
DNS Bank-687	Cash Credit (Pledge of Jaggery powder stock)	24-12-2025	4,000.00	Exclusive First Charge on stock of Jaggery and/or Khandsari Sugar stock kept at "" "Godown No. 01, Ground Floor, M. Pawar Wearhouse, Plot Number 01 & Block Number A-29, Main Road, Diksal MIDC, Diksal, Kalanb, Dharashiv-413 507" vide Stock pledger. Personal Guarantee of: 1. Mr. Dattatray Kashinath Kulkarni 2. Mrs. Dipali Dattatraya Kulkarni 3. Mr. Dinesh Mukund Kulkarni	On demand	9.40% p.a.	9.40% p.a.	Floating	2,082.38
				Total					**2,482.04**
Unsecured Loans									
Directors and other related parties									
Dattatray Kashinath Kulkarni									408.60
Dipali Dattatraya Kulkarni									2,113.11
				Total					**2,521.71**

Note:

1 **Primary Security**

Debtors, Fixed Deposit, Plant and Machinery for takeover and proposed TL, Pledge Stock, Stock.

Collateral Security / Guarantees

Equitable Mortgage of following properties

Property Details (Collateral)

1. Gut No. 912 Part Near Jagdamba Temple Village Khamaswadi Industrial Plot No. 01 And 02 M/s. Shree Sidhivinayak Greentech Industries Pvt. Ltd Moha Dhoki Road Tq. Kalamb Dist. Osmanabad Osmanabad Maharashtra 413507, Industrial Property used for commercial activity. (Name of the owner: Dattatray Kashinath Kulkarni)

2. Sy.no18/1 19and 20/3 Near Chandrama Residency Artemis Road Off Sun City Road Flat No.701 7th Floor Building Aura Artemis Co. operative Housing Society Ltd. Situated At Vadgaon Bk Anand Nagar Tq. Haveli Dist. Pune Pune Maharashtra 411051, Residential F Flat, Apartment. (Name of the owner: Mukund Kashinathrao Kulkarni)

3. Gut No. 911 Part Village Khamaswadi At Moha Dhoki Road Near Jagdamba Temple Beside M/s. Shree Sidhivinayak Greentech Industries Pvt. Ltd Tq. Kalamb Dist. Osmanabad Osmanabad Maharashtra 413507, Industrial Property used for commercial activity. (Name of the owner: Dattatray Kashinath Kulkarni)

4. Sy. No.113/A/1 Part Near Shree Sidhivinayak Agritech Industries Ltd Plot No.1 At. Village Limit Mouje Katgaon Tq.tuljapur Dist. Osmanabad Osmanabad Maharashtra 413623, Commercial-open Land (Name of the owner: Dattatray Kashinath Kulkarni)

5. Sy No 203/4 Osmanabad Commercial Open Land Front Of Tapre Building And Hotel Kesari Wada Bypass Road Waruda Road National Highway Touch Osmanabad Maharashtra 413501, Vacant Land. (Name of the owner: Dattatray Kashinath Kulkarni)

Guarantors:

1. Dinesh Mukund Kulkarni
2. Mukund Kashinathrao Kulkarni
3. Ganesh Ashok Kamte
4. Prathmesh Jagdish Awate
5. Dattatray Kashinath Kulkarni
6. Dipali Dattatraya Kulkarni

Note 35 The trade payables ageing schedule:

At the end of the year							As at 31 March 2026
Particulars	Unbilled dues	Not due for payment	Outstanding for following periods from due date of payment				Total
			Less than 1 year	1-2 year	2-3 year	More than 3 Year	
MSME	-	-	29.65				**29.65**
Others	-		1,470.37	16.68	13.95	173.97	**1,674.97**
Disputed dues – MSME	-	-	-	-	-	-	**-**
Disputed dues – Others	-	-	-	-	-	-	**-**

At the end of the year							As at 31 March 2025
Particulars	Unbilled dues	Not due for payment	Outstanding for following periods from due date of payment				Total
			Less than 1 year	1-2 year	2-3 year	More than 3 Year	
MSME	-	-	45.98	0.10	-	-	**46.08**
Others	-	-	1,052.75	21.58	205.39	-	**1,279.71**
Disputed dues - MSME	-	-	-	-	-	-	**-**
Disputed dues - Others	-	-	-	-	-	-	**-**

At the end of the year							As at 31 March 2024
Particulars	Unbilled dues	Not due for payment	Outstanding for following periods from due date of payment				Total
			Less than 1 year	1-2 year	2-3 year	More than 3 Year	
MSME	-	-	-	-	-	-	**-**
Others	-	-	2,415.36	-	-	-	**2,415.36**
Disputed dues - MSME	-	-	-	-	-	-	**-**
Disputed dues - Others	-	-	-	-	-	-	**-**

Note 36 The trade receivables ageing schedule:

At the end of the year							As at 31 March 2026
Particulars	Unbilled/ Not due	Outstanding for following periods from due date of payment					
		Less than 6 months	6 Month to 1 year	1-2 years	2-3 years	More than 3 Years	Total
(i) Undisputed trade receivables – considered good	-	717.90	2.37	1.41	1.88	-	**723.56**
(ii) Undisputed trade receivables – considered doubtful	-	-	-	-	-	-	**-**
(iii) Disputed trade receivables considered good	-	-	-	-	-	-	**-**
(iv) Disputed trade receivables considered doubtful	-	-	-	-	-	-	**-**

At the end of the year							As at 31 March 2025
Particulars	Unbilled/ Not due	Outstanding for following periods from due date of payment					
		Less than 6 months	6 Month to 1 year	1-2 years	2-3 years	More than 3 Years	Total
(i) Undisputed trade receivables – considered good	-	12.48	0.32	2.09	-	-	**14.89**
(ii) Undisputed trade receivables – considered doubtful	-	-	-	-	-	-	**-**
(iii) Disputed trade receivables considered good	-	-	-	-	-	-	**-**
(iv) Disputed trade receivables considered doubtful	-	-	-	-	-	-	**-**

At the end of the year							As at 31 March 2024
Particulars	Unbilled/ Not due	Outstanding for following periods from due date of payment					
		Less than 6 months	6 Month to 1 year	1-2 years	2-3 years	More than 3 Years	Total
(i) Undisputed trade receivables – considered good	-	266.69	-	-	-	-	**266.69**
(ii) Undisputed trade receivables – considered doubtful	-	-	-	-	-	-	**-**
(iii) Disputed trade receivables considered good	-	-	-	-	-	-	**-**
(iv) Disputed trade receivables considered doubtful	-	-	-	-	-	-	**-**

Note 37 Capital Work-in-Progress Ageing Schedule

As at 31 March 2026

CWIP	Less than 1 year	1-2 years	2-3 years	More than 3 years	Total
Project in progress	-	-	-	-	-
Projects temporarily suspended	-	-	-	-	-

As at 31 March 2025

CWIP	Less than 1 year	1-2 years	2-3 years	More than 3 years	Total
Project in progress	266.98	-	-	-	**266.98**
Projects temporarily suspended	-	-	-	-	-

As at 31 March 2024

CWIP	Less than 1 year	1-2 years	2-3 years	More than 3 years	Total
Project in progress	193.22	-	-	-	**193.22**
Projects temporarily suspended	-	-	-	-	-

Note

The Company does not have any Capital Work-in-Progress projects whose completion is overdue or whose cost has exceeded the original plan. Further, there are no projects where activity has been suspended as at the reporting date. Accordingly, disclosure requirements under Schedule III to the Companies Act, 2013 are not applicable.

Note 38 Employee Benefits

I. Defined contribution plans

The Company has classified the various benefits provided to employees as under:

a. Contribution to provident fund & Other funds

The expense recognised during the period towards defined contribution plan -

Particulars	For the year ended		
	31 March 2026	31 March 2025	31 March 2024
Contribution to provident fund	21.01	15.68	8.21
ESIC	0.05	-	-

II. Defined benefit plans

Gratuity

The cost of providing benefits is determined using the Projected Unit Credit Method,

The Company should provide for gratuity for employees in India as per the Payment of Gratuity Act, 1972. Employees who are in continuous service for a period of 5 years are eligible for gratuity. The amount of gratuity payable on retirement/ termination is the employees last drawn basic salary per month computed proportionately for 15 days salary multiplied for the number of years of service, subject to a payment ceiling of ₹ 20,00,000/-.

Based on the actuarial valuation obtained in this respect, the following table sets out the details of the employee benefit obligation as at balance sheet date:

Particulars	For the year ended		
	31 March 2026	31 March 2025	31 March 2024
I. Changes in present value of obligations			
Present value of obligation as at the beginning of the period	5.13	2.05	-
Interest cost	0.40	0.16	-
Current service cost	3.77	3.07	2.05
Benefits paid	-	-	-
Actuarial (Gain) / Loss on obligations	0.17	(0.14)	-
Present value of obligation as at the end of the period	**9.47**	**5.13**	**2.05**

II. Actuarial (Gain) / Loss recognized	31 March 2026	31 March 2025	31 March 2024
Actuarial (Gain) / loss for the period – Obligations	0.17	(0.14)	-
Actuarial (Gain) / Loss for the period – Plan assets	-	-	-
Total (Gain) / Loss for the period	0.17	(0.14)	-
Actuarial (Gain) / Loss recognised in the period	0.17	(0.14)	-
Unrecognised actuarial (Gain) / Loss at the end of the period	-	-	-

III. Amount to be recognised in the Balance Sheet	31 March 2026	31 March 2025	31 March 2024
Present value of obligation at the end of period	9.47	5.13	2.05
Fair value of the plan assets at the end of period	-	-	-
Surplus / (Deficit)	(9.47)	(5.13)	(2.05)
Current liability	0.36	0.26	0.01
Non-current liability	9.11	4.87	2.04
Unrecognised past service cost	-	-	-
Amount not recognised as asset (Para 59(b) limit)	-	-	-
Net asset / (liability) recognised in balance sheet	(9.47)	(5.13)	(2.05)

IV. Expense recognised in the statement of profit and loss	31 March 2026	31 March 2025	31 March 2024
Current service cost	3.77	3.07	2.05
Past service cost	-	-	-
Interest cost	-	-	-
Actuarial (Gain) / Loss recognised in the period	0.17	(0.14)	-
Expenses recognised in the statement of profit & loss at the end of period	4.34	3.09	2.05

V. Reconciliation of net asset / (liability) recognised	31 March 2026	31 March 2025	31 March 2024
Net asset / (liability) recognised at the beginning of the period	(5.13)	(2.05)	-
Benefits directly paid by Company	-	-	-
Expense recognised at the end of period	(4.34)	(3.09)	(2.05)
Net asset / (liability) recognised at the end of the period	(9.47)	(5.13)	(2.05)

VI. Experience adjustment for the current period	31 March 2026	31 March 2025	31 March 2024
Present value of obligations	9.47	5.13	2.05
Plan assets	-	-	-
Surplus / (Deficit)	(9.47)	(5.13)	(2.05)
Experience (Gain) or Loss on plan liabilities	-	-	-
Experience (Gain) or Loss on plan assets	-	-	-

VII. Actuarial assumptions:	31 March 2026	31 March 2025	31 March 2024
Mortality table	IALM 2012-14	IALM 2012-14	IALM 2012-14
Discount rate (p.a.)	7.75%	7.75%	7.75%
Rate of increase in compensation levels (p.a.)	5.00%	5.00%	5.00%
Expected rate of return on plan assets	0.00%	0.00%	0.00%
Retirement Age	58 years	58 years	58 years
Withdrawal Rate (p.a.)	10.00%	10.00%	10.00%

(The rest of the page is intentionally left blank)

Note 39 Foreign exchange earnings/ expenditures during the year			
Particulars	**For the year ended**		
	31 March 2026	**31 March 2025**	**31 March 2024**
Foreign exchange earnings	-	-	-
Foreign exchange expenditures	-	-	-

Note 40 Unhedged Foreign Currency Exposure during the year			
Particulars	**For the year ended**		
	31 March 2026	**31 March 2025**	**31 March 2024**
Trade Payables	-	-	-
Trade Receivables	-	-	-

Note 41 Sundry debtors, sundry creditors, loans & advances balances are subject to confirmation.

Note 42 Contingent Liability and Commitments

The Provision for Contingent Liability as per AS 29 Provisions, Contingent Liabilities and Contingent Assets is as follows:

Particulars	**Aa at**		
	31 March 2026	**31 March 2025**	**31 March 2024**
I. Contingent Liabilities			
(a) claims against the company not acknowledged as debt;	20.91	6.87	0.04
(b) guarantees; and	0.50	-	-
(c) other money for which the company is contingently liable	-	-	-
II. Commitments			
a) estimated amount of contracts remaining to be executed on capital account and not provided for	-	-	-
(b) uncalled liability on shares and other investments partly paid	-	-	-
(c) other commitments	-	-	-

Note 43 Leasing arrangements:

As Lessee

The Company has entered into various lease arrangements in the ordinary course of business. The lease agreements are entered into for different tenures and contain terms and conditions that vary based on the nature of the leased asset and the respective contractual arrangements.

Particulars	**For the year ended**		
	31 March 2026	**31 March 2025**	**31 March 2024**
Future minimum lease payments (for non-cancellable period)			
not later than one year	51.98	61.26	12.00
later than one year and not later than five years	174.95	168.00	48.00
later than five years	246.00	288.00	160.00
	472.93	517.26	220.00
Total lease payments recognized in the Statement of Profit and Loss for all leases	64.55	70.80	37.96

Note 44 The previous year comparative amounts are for a period of 12 months and are for the year ended 31 March 2025.

Note 45 Previous years figures have been re-classified and regrouped in accordance with the requirements applicable in the current year.

Note 46 Expenditure on Corporate Social Responsibility (CSR) Activities:

Pursuant to Section 135 of the Companies Act, 2013, the Company is required to spend towards Corporate Social Responsibility (CSR) activities.

Corporate Social Responsibility expenses	For the year ended		
	31 March 2026	31 March 2025	31 March 2024
(i) Gross amount required to be spent by the company during the year	7.39	-	-
(ii) Amount of expenditure incurred during the year	7.39	-	-
(iii) Shortfall/(Excess) Spent at the end of the year	-	-	-
(iv) Nature of CSR activities	CSR expenditure incurred towards promotion of education through contribution to a social foundation engaged in operating and supporting schools.		
(v) Details of related party transactions, e.g., contribution to a trust controlled by the company in relation to CSR expenditure as per relevant Accounting Standard	Not Applicable	Not Applicable	Not Applicable

Note 47 Segment information:

Based on the internal reporting reviewed by the management, the Company operates in a single reportable business segment within a single geography. Accordingly, no separate segment information is required under Accounting Standard (AS-17) – "Segment Reporting".

Note 48 OTHER RELEVANT DISCLOSURES

Additional regulatory information required by Schedule III of Companies Act, 2013:

A.	**Disclosure of Title Deeds of Immovable Properties not held in name of the Company** The Company does not have any immovable property (other than properties where the Company is the lessee and the lease agreements are duly executed in favour of the lessee) whose title deeds are not held in the name of the company.
B.	**Revaluation of property, plant and equipment** The Company has not revalued its Property, Plant and Equipment.
C.	**Loans or Advances in the nature of loans granted to promoters, directors, KMP and related parties** The Company has not granted any loans or advances in the nature of loans to Promoters, Directors, Key Managerial Personnel (KMPs) or Related Parties which are repayable on demand or without specifying any terms or period of repayment.
D.	**Benami Property Disclosure** No proceedings have been initiated or are pending against the Company under the Benami Transactions (Prohibition) Act, 1988.
E.	Balance of Debtors & Creditors & Loans & advances Taken & giving are subject to confirmation and subject to consequential adjustments, if any. Debtors & creditors balance has been shown separately and the advances received and paid from/to the parties is shown as advance from customer and advance to suppliers.
F.	The company has no transactions, which are not recorded in the books of accounts and which are surrendered or disclosed as income during the year in the tax assessment or in search or survey or under any other relevant provision of the Income Tax Act, 1961.
G.	The Company has not traded or invested in crypto currency or virtual currency for the current year or previous years.
H.	The Company do not had any transaction with the companies which are struck off under section 248 of the Companies Act, 2013 or section 560 of the Companies Act, 1956.
I.	The company has not been declared as wilful defaulter by any bank or from any other lender.

J.	The company has registered all the charges which are required to be registered under the terms of the loan and liabilities and submitted Documents with ROC within the period as required by Companies Act, 2013.
K.	As per the information & detail available on records and the disclosure given by the management, the company has complied with the number of layers prescribed under clause (87) of section 2 of the companies act read with the Companies (Restriction on number of layers) Rules 2017.
L.	**Utilisation of Borrowed funds** i. No funds have been advanced or loaned or invested (either from borrowed funds or share premium or any other sources or kind of funds) by the Company to or in any other persons or entities, including foreign entities ("Intermediaries"), with the understanding, whether recorded in writing or otherwise, that the Intermediary shall, directly or indirectly lend or invest in other persons or entities identified in any manner whatsoever ("Ultimate Beneficiaries") by or on behalf of the Company or provide any guarantee, security or the like on behalf of the Ultimate Beneficiaries. ii. No funds have been received by the Company from any persons or entities, including foreign entities ("Funding Parties"), with the understanding, whether recorded in writing or otherwise, that the Company shall directly or indirectly, lend or invest in other persons or entities identified in any manner whatsoever ("Ultimate Beneficiaries") by or on behalf of the Funding Parties or provide any guarantee, security or the like on behalf of the Ultimate Beneficiaries.
M.	Compliance with approved scheme(s) of arrangements: The Company has not entered into any scheme of arrangement which has an accounting impact on current or previous financial year.
N.	The Company does not have any undisclosed income which is not recorded in the books of account that has been surrendered or disclosed as income during the year in the tax assessments under the Income Tax Act, 1961.
O.	No Significant Subsequent events have been observed which may require an adjustments to the financial statements.

(The rest of the page is intentionally left blank)

OTHER FINANCIAL INFORMATION

(₹ in Lakhs)

Particulars	For the Financial Years ended March 31		
	2026	**2025**	**2024**
Restated PAT as per P&L Account	1,159.22	549.66	308.13
EBITDA	2,046.22	1,454.29	861.30
Weighted Average Number of Equity Shares at the end of the Period - Basic	49,00,000	49,00,000	49,00,000
Weighted Average Number of Equity Shares at the end of the Period – Basic Adjusted for bonus after the financial year ended March 31, 2026*	1,22,50,000	1,22,50,000	1,22,50,000
Net worth	2,507.01	1,847.78	1,298.13
Current Assets	7,505.57	5,646.47	5,356.43
Current Liabilities	8,302.42	6,438.68	6149.96
Earnings per share			
Basic EPS	23.66	11.22	6.29
Adjusted EPS	9.46	4.49	2.52
Return on Net Worth %	46.24%	29.75%	23.74%
Net Asset value per share	51.16	377.10	264.92
Net Asset value per share – Adjusted	20.47	15.08	10.60
Current ratio	0.90	0.88	0.87
Nominal value per equity share (₹.)#	10	10	10

Pursuant to Special Resolution passed at the Extra Ordinary General Meeting held on January 23,2026, Equity Shares of face value of ₹100/- each of our Company were sub-divided into Equity Shares of face value of ₹10/- each.

Notes:

1) The ratios have been calculated as below
   a) Basic Earnings per Share (₹) = Restated PAT attributable to Equity Shareholders/ Weighted number of Equity Shares
   b) Adjusted Earnings per Share (₹) = Restated PAT attributable to Equity Shareholders/ Weighted number of Equity Shares adjusted for bonus
   c) Return on Net Worth (%) = Restated PAT attributable to Equity Shareholders/ Net Worth.
   d) Restated Net Asset Value per equity share (₹) = Restated Net Worth as at the end of the year/ Total Number of Equity Shares outstanding during the year.
2) Weighted Average Number of equity shares is the number of equity shares outstanding at the beginning of the year adjusted by the number of equity shares issued during the year multiplied by the time weighting factor. Further, number of shares are after considering impact of the bonus shares and split shares.
3) Earnings Per Share calculation are in accordance with Accounting Standard 20- Earnings per Share, notified under the Companies (Accounting Standards) Rules 2006, as amended.
4) Net Worth = Equity Share Capital + Reserve and Surplus (including surplus in the Statement of Profit & Loss)
5) The figures disclosed above are based on the Restated Financial Statements of our Company.

RELATED PARTY TRANSACTIONS

For details on related party transactions (As per the requirement under Accounting Standard 18 "Related Party Disclosure" issued by ICAI) of our Company during the restated audit period as mentioned in this Draft Red Herring Prospectus i.e., for the period March 31, 2026, March 31, 2025 and March 31, 2024 please refer *Note 28 titled "Statement of Related Party Transaction" of Annexure V- Notes to Restated Financial Information of the chapter titled "Restated Financial Statements on page no. 248 of this Draft Red Herring Prospectus.*

(The rest of the page is intentionally left blank)

MANAGEMENT'S DISCUSSION AND ANALYSIS OF FINANCIAL POSITION AND RESULTS OF OPERATIONS

The following discussion and analysis of our financial condition and results of operations for the period ending March 31, 2026, March 31, 2025 and March 31, 2024 is based on and should be read in conjunction with, our Restated Financial Statements, including the schedules, notes and significant accounting policies thereto, included in the chapter titled "Restated Financial Statements" beginning on page no. 227 of this Draft Red Herring Prospectus. Our Restated Financial Statements have been derived from our audited financial statements and restated in accordance with the SEBI ICDR Regulations and the ICAI Guidance Note. Our restated financial statements are prepared in accordance with applicable Accounting Standards.

You should read the following discussion of our financial condition and results of operations together with our restated financial statements included in this Draft Red Herring Prospectus. You should also read the section titled "Risk Factors" beginning on page no. 22 of this Draft Red Herring Prospectus, which discusses number of factors, risks and contingencies that could affect our financial condition and results of operations. Our fiscal year ends on March 31 of each year, so all references to a particular fiscal year are to the twelve-month period ended March 31 of that year.

In this section, unless the context otherwise requires, any reference to "we", "us" or "our" refers to Shree Siddhivinayak Greentech Industries Limited, our Company. Unless otherwise indicated, financial information included herein are based on our "Restated Financial Statements" for the Financial Years ended March 31, 2026, March 31, 2025 and March 31, 2024 included in this issue document beginning on page no. 227 of this Draft Red Herring Prospectus.

BUSINESS OVERVIEW

Our Company was originally incorporated on June 24, 2022 as "Shree Siddhivinayak Greentech Industries Private Limited", a Private Limited Company under the provisions of the Companies Act, 2013, vide Certificate of Incorporation dated June 25, 2022, issued by the Registrar of Companies, Central Processing Centre. Our Company's main objects is to carry on the business of manufacturing and trading of Jaggery and Sugar including all its "by-products" like Bagasses, Press mud, Molasses and Ash. Further the main objects of our Company also allow our Company to undertake the manufacturing, trading and cultivation of food products. Our Company filed e-form 20A for submission of declaration of commencement of business on September 16, 2022.

Our company initially started with the manufacturing of Jaggery Powder in the FY 2023-2024. Thereafter, our Company entered the segment of value added food products i.e. Jaggery based Pre-Mixes (Instant Rice Kheer, Jaggery Tea, Jaggery Laddoo, Jaggery Lapsi and Jaggery Coffee premixes) during the FY 2024-2025. Thereafter, our Company started the manufacturing of Khandsari Sugar during FY 2025-2026. Further during the same period our Company also ventured into backward integration of cultivation and sale of Sugarcane Seeds ("Cane Seeds").

Subsequently, our Company was converted from a Private Limited Company to a Public Limited Company pursuant to a special resolution passed by the shareholders at the Extraordinary General Meeting held on January 30, 2026. The name of our Company was consequently changed to "Shree Siddhivinayak Greentech Industries Limited", and a fresh Certificate of Incorporation was issued by the Registrar of Companies, Central Processing Centre, on March 27, 2026.

Thereafter, the MOA of our Company was amended to reflect the insertion of the following new clause to the main objects, vide Special Resolution passed at the Extraordinary General Meeting held June 16, 2026:

To carry on the business of farming, horticulture, tissue culture, biotech, floriculture, sericulture, cultivation of all kinds of food grains, seeds, nursery, fruits, fodders and to carry on the business of plantation of all types of poultry farming, dairy farming dairy products and agricultural plantations.

The same was approved by the Registrar of Companies, Central Processing Centre vide issue of "Certificate of Registration of the Special Resolution confirming Alteration of Object Clause(s)" dated July 02, 2026.

It is to be noted that the aforesaid amendment did not result in any material change in the scope of our Company's existing operations but is intended solely for the purpose of clarity, precision, and better presentation of our Company's objects in its constitutional document.

The Corporate Identification Number of our Company is U10720MH2022PLC385368. The registered office of our Company is situated at Block Number 1 and 4 Floor No-1 and 2 Survey No 120, Plot No 4 & C.T.S. Number-5343 Sambhaji Nagar Behind DIC, Osmanabad, Maharashtra, India, 413501.

The Promoters of our Company are Mrs. Dipali Dattatraya Kulkarni & Mr. Dattatray Kashinath Kulkarni.

We are engaged in the manufacture of Jaggery Powder and Khandsari Sugar from sugarcane through the crushing and clarification process. We also manufacture jaggery-based value-added food products and market it under our "Feel Guddy" brand and operate a nursery for cultivation and sale of sugarcane seeds. We cater to both Business-to-Business ("B2B") and Business-to-Consumer ("B2C") markets through wholesale customers, our retail outlet and online sales channels. We also propose to launch Khandsari Sugar in consumer packs under the "Simply Sakhar" brand during FY 2026-27.

Our manufacturing operations are seasonal and are carried out during the annual sugarcane crushing season, generally from October-November to April-May. To handle the huge volume of cane arriving from farms, our factory usually operates continuously on 24-hour basis in shifts until the season ends. Through our sugarcane nursery, we seek to improve the availability and quality of sugarcane by supplying healthy cane seeds to farmers, while also generating revenue from seed sales and strengthening long-term relationships with farmers.

We follow a zero-wastage and zero-discharge manufacturing model, whereby all by-products generated during production are either utilized internally or commercially sold. Bagasse is used as boiler fuel for captive steam and power generation, with the balance being sold for industrial applications. Molasses, press mud and ash are sold for use in ethanol production, organic fertilizers, construction materials and other industrial applications, enabling efficient resource utilization and additional revenue generation.

FACTORS AFFECTING OUR RESULTS OF OPERATIONS:

Our business is subjected to various risks and uncertainties, including those discussed in the *section titled "Risk Factors" beginning on page no. 22 of this Draft Red Herring Prospectus*. Our Results of Operations and financial conditions are affected by numerous factors including the following:

- Availability, quality and cost of sugarcane (i.e. primary raw material)
- Seasonal nature of operations (i.e. operations are limited to the crushing season)
- Climate and agricultural risks (i.e. rainfall, climate variability, crop disease)
- Prices of sugarcane (input) as well as Jaggery Powder/Khandsari Sugar (output) are price sensitive and competitive.
- Our execution capability
- Cost of labour and inputs
- Availability of cost effective funding sources
- Competition from existing and new entrants
- Technological changes
- General economic and demographic changes
- Changes in the Customer preferences
- Changes in laws and regulations that apply to the industry in which we operate

KEY PERFORMANCE INDICATORS OF OUR COMPANY

((₹ in Lakhs)

Key Financial Performance	Unit	March 31, 2026	March 31, 2025	March 31, 2024
Revenue from Operations	In Lakhs	7,526.77	5,856.63	3,627.64
Year on year revenue growth	In %	28.52%	61.44%	-
EBITDA	In Lakhs	2,064.22	1,454.29	861.30
EBITDA Margin	In %	27.19%	24.83%	23.74%
PAT	In Lakhs	1,159.22	549.66	308.13
PAT Margin	In %	15.40%	9.39%	8.49%
Profit after tax growth	In %	110.90%	78.39%	-
Cash Profit after tax	In Lakhs	1,334.55	708.63	455.92
Operating cash flow	In Lakhs	504.19	1,324.17	(1,778.64)
Trade Receivables days	In Days	0	8	0
Inventory days	In Days	117	147	1

Key Financial Performance	Unit	March 31, 2026	March 31, 2025	March 31, 2024
Trade Payable days	In Days	150	256	101
Interest Coverage Ratio	In Times	3.70	1.98	1.88
Net worth	In Lakhs	2,507.01	1,847.78	1,298.13
Debt	In Lakhs	8,995.37	7,275.58	7,645.26
Net fixed asset turnover ratio	In Times	1.24	1.09	0.76
Current Ratio	Times	0.90	0.88	0.87
Debt-Equity Ratio	Times	3.59	3.94	5.89
Return on equity	In %	53.24%	34.94%	47.11%
Return on capital employed	In %	19.76%	17.20%	9.22%
Net Asset Value per equity share	In ₹	51.16	377.10	264.92
Net Asset Value per equity share - Adjusted	In ₹	20.47	15.08	10.60

For explanation of 'Key Performance Indicators' of our Company, please refer "Basis and Explanation for KPI", under Chapter titled "Basis of the Issue" beginning on page no. 110 of the Draft Red Herring Prospectus.

SIGNIFICANT ACCOUNTING POLICIES:

For accounting policies please refer "Significant Accounting Policies to the Restated Financial Statements", under Section titled "Financial Information" on page no. 233 of the Draft Red Herring Prospectus.

DISCUSSION ON THE FINANCIAL METRICS

The following table sets forth select financial data from restated balance sheet for the financial year ended on March 31, 2026, March 31, 2025, and March 31, 2024.

(₹ in Lakhs)

Particulars	31-Mar-26	31-Mar-25	31-Mar-24
Long Term borrowings	3,419.39	3.025.53	3,988.37
Short Term borrowings	5,575.98	4,250.05	3,656.89
Trade Receivable	723.56	14.89	266.69
Trade Payable	1704.62	1325.8	2415.36
Inventories	5585.2	4801.22	4715.61
Investments	53.25	48.2	649.2
Loans and advances given	235.94	312.04	69.94
Contingent liability	21.41	6.87	0.04

YEAR ON YEAR COMPARISON OF COMPONENTS OF THE FINANCIAL METRICS

Sr.No.	Particulars	Fiscal 2026 to Fiscal 2025	Fiscal 2025 to Fiscal 2024
1	Long term borrowings	Increase in the long term borrowings amounting to ₹393.86 lakhs during the FY 2025-2026 as a result of additional borrowings undertaken by our Company and subsequent repayments made by our Company	Decrease in the long term borrowings amounting to ₹962.84 lakhs during the FY 2024-2025 as a result of repayment during the said financial year.
3	Short term borrowings	Increase in the short term borrowings of ₹1,325.93 lakhs during the FY 2025-2026 was on account of requirements of short term funds for working capital.	Increase in the short term borrowings of ₹593.16 lakhs during the FY 2024-2025 was on account of requirements of short term funds for working capital.
4	Trade receivable	Increase in the trade receivable of ₹708.67 lakhs during the FY 2025-2026 on account of growth in turnover of our Company.	Decrease in the Trade receivable ₹251.80 lakhs during the FY 2024-2025 on account of operational efficiency.
5	Trade payable	Increase in the trade payable of ₹378.82 lakhs during the FY 2025-2026 on account of growth in turnover of our Company and consequent increase in purchase of raw materials.	Decrease in the Trade payable ₹1,089.56 lakhs during the FY 2024-2025 on account of operational efficiency.

Sr.No.	Particulars	Fiscal 2026 to Fiscal 2025	Fiscal 2025 to Fiscal 2024
6	Inventories	Increase in inventories of ₹783.98 lakhs during the FY 2025-2026 on account of increase in the production and increase in rates of raw materials.	Increase in inventories of ₹85.61 lakhs during the FY 2024-2025.
7	Loans and advances given	Decrease in the loans and advances given of ₹76.10 lakhs during the FY 2025-2026	Increase in the loans and advances given of ₹242.0 lakhs during the FY 2024-2025
8	Contingent liability	Increase in the contingent liability (relating to TDS) of ₹14.04 lakhs during the FY 2025-2026. Balance 0.50 lakhs relate to the bank guarantee provided for obtaining MPCB license.	Increase in the contingent liability (relating to TDS) of ₹6.83 lakhs during the FY 2024-2025.

DISCUSSION ON RESULTS OF OPERATIONS

The following table sets forth select financial data from restated profit and loss accounts for the financial year ended on March 31, 2026, March 31, 2025, and March 31, 2024, and the components of which are also expressed as a percentage of total income for such periods.

(The rest of the page is intentionally left blank)

PARTICULARS		For the year ended 31 March 2026	%	For the year ended 31 March 2025	%	For the year ended 31 March 2024	%
1	**Income**						
(a)	Revenue from operations	7,526.77	96.11	5,856.63	95.81	3,627.64	98.30
(b)	Other income	304.86	3.89	256.16	4.19	62.81	1.70
	Total income	7,831.63	100.00	6,112.79	100.00	3,690.45	100.00
2	**Expenditure**						
(a)	Cost of materials consumed	5,136.88	65.59	3,538.80	57.89	6,633.57	179.75
(b)	Manufacturing expenses	266.01	3.40	253.10	4.14	375.92	10.19
(c)	Changes in inventories of finished goods, work-in-progress and stock-in-trade	(783.98)	(10.01)	(85.61)	(1.40)	(4,715.61)	(127.78)
(d)	Employee benefit expenses	463.55	5.92	389.08	6.37	294.03	7.97
(e)	Finance cost	685.96	8.76	801.53	13.11	460.91	12.49
(f)	Depreciation and amortization expense	175.33	2.24	158.97	2.60	147.79	4.00
(g)	Other expenses	300.84	3.84	288.88	4.73	130.60	3.54
	Total expenses	6,244.59	79.74	5,344.75	87.44	3,327.21	90.16
3	**Profit/(Loss) before exceptional and extraordinary items and tax (1-2)**	**1,587.04**	20.26	**768.04**	12.56	**363.24**	9.84
4	Exceptional items	-	-	-	-	-	
5	**Profit/(Loss) before extraordinary items and tax (3-4)**	**1,587.04**	20.26	**768.04**	12.56	**363.24**	9.84
6	Extraordinary items	-		-		-	
7	**Profit/(Loss) before extraordinary items and tax (5-6)**	**1,587.04**	20.26	**768.04**	12.56	**363.24**	9.84
8	**Tax expense:**						
(a)	Tax expense for current year	284.11	3.63	53.25	0.87	15.96	0.43
(b)	Short / (Excess) provision of tax relating to earlier years	-	-	(0.55)	(0.01)	-	-
(c)	Deferred tax	143.71	1.83	165.68	2.71	39.15	1.06
	Net current tax expenses	**427.82**	5.46	**218.38**	3.57	**55.11**	1.49
9	**Profit/(Loss) for the year (7-8)**	**1,159.22**	14.80	**549.66**	8.99	**308.13**	8.35

KEY COMPONENTS OF OUR STATEMENT OF PROFIT AND LOSS BASED ON OUR RESTATED FINANCIAL STATEMENTS INCOME

Our Total Income comprises of Revenue from operations and Other Income.

Revenue from operations

Our Revenue from Operations mainly comprises of sale of finished goods (i.e. Jaggery Powder, Khandsari Sugar, Jaggery Premix and Sugarcane Seed) and by-products sale (i.e. Bagasses, Press mud, Molasses and Ash). Revenue from Operations consists of 96.11%, 95.81% and 98.30% in FY 2025-2026, FY 2024-2025 and FY 2023-2024 respectively. *For details in relation to the product offerings, please refer to Chapter titled "Our Business" beginning on page no. 147 of this Draft Red Herring Prospectus.*

Other Income

Other Income constitute very negligible amount of the Total Income. The said other income pertains to Interest Income, Dividend Income and Subsidy Income from Government of Maharashtra, Directorate of Industries under the Package Scheme of Incentive, 2019.

Expenditure

Our total expenditure primarily consists of cost of material consumed, manufacturing expenses, change in Inventories, employee benefit expenses, finance costs, depreciation and amortization expenses and other expenses. The total expenses constitute 79.74%, 87.44% and 90.16% of total income for FY 2025-2026, FY 2024-2025 and FY 2023-2024 respectively.

Cost of Material Consumed:

Our cost of material consumed primarily consists of Raw material i.e. Sugarcane. In addition, expenses for H&T also constitutes part of the costs for the material consumed. The cost of materials consumed constitutes 65.59%, 57.89% and 179.75% of total income for FY 2025-2026, FY 2024-2025 and FY 2023-2024 respectively.

Manufacturing Expenses:

Manufacturing expenses primarily consists of all the expenses undertaken by our Company for the operation of the factory. Manufacturing expenses constitutes 3.40%, 4.14% and 10.19% as a percentage of Total Income for FY 2025-2026, FY 2024-2025 and FY 2023-2024 respectively.

Employee Benefit Expenses:

Employee benefit expenses include compensation to employees, director's remuneration, contribution to provident fund, ESIC, gratuity expenses and staff welfare expenses. Employee benefit expenses constitutes 5.92%, 6.37% and 7.97% of total income for FY 2025-2026, FY 2024-2025 and FY 2023-2024 respectively.

Other Expenses:

Other expenses includes audit remuneration, administrative expenses, advertisement, annual AMC charges, consultancy fees, contractor service charges, CSR expenses, GST expenses, guest house expenses, insurance expenses, grampanchayat tax, late filling and interest expenses, legal and professional expenses, miscellaneous expenses, nursary tray expenses, parcel and courier expenses, printing and stationery expenses, rates and taxes, rent, repairs to building and machinery, ROC fees, selling and distribution expenses, telephone expenses, travelling expenses. Other Expenses constitutes 3.84%, 4.73% and 3.54% of total income for FY 2025-2026, FY 2024-2025 and FY 2023-2024 respectively.

Finance Cost

Finance cost primarily consists of interest paid to banks, and other finance costs. Finance cost constitutes was 8.76%, 13.11% and 12.49% of total income for FY 2025-2026, FY 2024-2025 and FY 2023-2024 respectively.

***Depreciation & Amortization**:*

Depreciation & Amortization includes depreciation on assets which includes building, plant and equipment, furniture and fixture, office equipment and computer. Depreciation & Amortization constitutes 2.24%, 2.60% and 4% of total income for FY 2025-2026, FY 2024-2025 and FY 2023-2024 respectively.

Tax Expenses:

Tax expenses include current tax and deferred tax. The provision for current taxation is computed in accordance with relevant tax laws. Deferred tax is recognized on timing differences between the accounting income and the taxable income for the year and quantified using the tax rates as on balance sheet date.

YEAR ON YEAR COMPARISON OF COMPONENTS OF THE INCOME STATEMENT

Sr.No.	Particulars	Fiscal 2026 to Fiscal 2025	Fiscal 2025 to Fiscal 2024
1	Total Income	Our Total Income increased by 28.12% to ₹7,831.63 Lakhs for Fiscal 2026 from ₹6,112.79 Lakhs for Fiscal 2025.	Our Total Income increased by 65.64% to ₹6,112.79 Lakhs for Fiscal 2025 from ₹3,690.45 Lakhs for Fiscal 2024.
2	Revenue from Operations	Our Revenue from Operations increased by 28.52% to ₹7,526.77 Lakhs for Fiscal 2026 from ₹5,856.63 Lakhs for Fiscal 2025 as during Fiscal 2026 our Company started production and sale of Khansari Sugar and Sugarcane seeds. Further Company also reached optimization.	Our Revenue from Operations increased by 61.44% to ₹5,856.63 Lakhs for Fiscal 2025 from ₹3,627.64 Lakhs for Fiscal 2024 as during Fiscal 2024 our sales started during November 2024 and hence, the sales were only for 4 months. However, the sale during Fiscal 2025 was recorded for 12 months.
3	Other Income	Our other income increased by 19.01% to ₹304.86 Lakhs for Fiscal 2026 from ₹256.16 Lakhs for Fiscal 2025. Other Income predominantly consists of the interest income, dividend income and government subsidy. The substantial increase in the other income is due to the accrual of government subsidy of ₹281.79 Lakhs during FY 2025-2026.	Our other income increased by 307.83% to ₹256.16 Lakhs for Fiscal 2025 from ₹62.81 Lakhs for Fiscal 2024. Other Income predominantly consists of the interest income, dividend income and government subsidy. The substantial increase in the other income is due to the accrual of government subsidy of ₹256.16 Lakhs during FY 2024-2025 which was only ₹54.66 Lakhs during FY 2023-2024.
4	Cost of material consumed	Our cost of material consumed increased by 45.16% to ₹5,136.88 Lakhs for Fiscal 2026 from ₹3,538.80 Lakhs for Fiscal 2025 as during the Fiscal 2025 our factory was operational for 102 days. However, for Fiscal 2026 our factory was operational for 120 days. Further, the cost of raw material had also increased.	Our Cost of material consumed decreased by 46.65% to ₹3,538.80 Lakhs for Fiscal 2025 from ₹6,633.57 Lakhs for Fiscal 2024 as during the Fiscal 2024 our factory was operational for 146 days. However, for Fiscal 2025 our factory was only operational for 102 days.
5	Manufacturing expenses	Our manufacturing expenses increased by 5.10% to ₹266.01 Lakhs for Fiscal 2026 from ₹253.10 Lakhs for Fiscal 2025 as during the Fiscal 2025 our factory was operational for 102 days. However, for Fiscal 2026 our factory was operational for 120 days.	Our manufacturing expenses decreased by 32.67% from ₹ 375.92 Lakhs for FY 2024 to ₹ 253.10 Lakhs for FY 2025 as during the Fiscal 2024 our factory was operational for 146 days. However, for Fiscal 2025 our factory was only operational for 102 days. Further, our Company during Fiscal 2025 being the second operational year of the factory had optimized its manufacturing expenses.

Sr.No.	Particulars	Fiscal 2026 to Fiscal 2025	Fiscal 2025 to Fiscal 2024
6	Employee Benefit Expenses	The employee benefits expense increased by 19.14% to ₹463.55 Lakhs for Fiscal 2026 from ₹389.08 Lakhs for Fiscal 2025. The salary component in our Company's statement of profit and loss varies in response to growth in the business operation. This fluctuation is a result of our Company's strategic approach to staffing, aligning workforce levels with workload requirements.	The employee benefits expense increased by 32.33% to ₹389.08 Lakhs for Fiscal 2025 from ₹294.03 Lakhs for Fiscal 2024. The salary component in our Company's statement of profit and loss varies in response to growth in the business operation. This fluctuation is a result of our Company's strategic approach to staffing, aligning workforce levels with workload requirements.
7	Finance Cost	Finance Cost decreased by 14.42% to ₹685.96 Lakhs for Fiscal 2026 from ₹801.53 Lakhs for Fiscal 2025 on account of reduction in interest rates.	Finance Cost increased by 73.90% to ₹801.53 Lakhs for Fiscal 2025 from ₹460.91 Lakhs for Fiscal 2024 as the interest component in Fiscal 2024 is only for 3-4 months because till October 2024, our Company was capitalizing the interest cost.
8	Depreciation & Amortization	Our depreciation and amortization expense increased by 10.29% to ₹175.33 Lakhs for Fiscal 2026 from ₹158.97 Lakhs for Fiscal 2025. The resultant increase is primarily due to the reason of addition of Fixed Assets pertaining to Building, Plant and Machinery for the Khandsari unit, Furniture and Fixture, office equipment and computer.	Our depreciation and amortization expense increased by 7.56% to ₹158.97 Lakhs for Fiscal 2025 from ₹147.79 Lakhs for Fiscal 2024. The resultant increase is primarily due to the reason of addition of Fixed Assets pertaining to Building, Plant and Machinery, Furniture and Fixture, office equipment and computer.
9	Other Expenses	Other expenses increased by 4.14% to ₹300.84 Lakhs for Fiscal 2026 from ₹288.88 Lakhs for Fiscal 2025. The principal attribute was rise in administrative fees, advertisement expenses, annual AMC charges, contractor service charges, audit remuneration, CSR expenses, nursery tray expenses, rates and taxes and travelling expenses.	Other expenses increased by 121.19% to ₹288.88 Lakhs for Fiscal 2025 from ₹130.60 Lakhs for Fiscal 2024. The principal attribute was rise in GST expenses (reversal to the extent of exempt sale of products), insurance expenses, audit remuneration, consultancy fees, grampanchayat tax, miscellaneous expenses, Rent, repair to machinery, ROC fees and selling & distribution expenses. The above increase in other expenses is predominantly due to the fact that during the Fiscal 2024 our factory was operational for 146 days. However, for Fiscal 2025 our factory was only operational for 102 days.
10	Profit before tax	Profit before tax has increased by 106.64% from ₹768.04 lakhs for Fiscal 2025 to ₹1,587.04 lakhs for Fiscal 2026 on account of various factors as explained herein above.	Profit before tax has increased by 111.44% to ₹768.04 lakhs for Fiscal 2025 from ₹ 363.24 lakhs for Fiscal 2024 on account of various factors as explained herein above.
11	Tax Expense	Our Tax Expense increased from ₹218.38 lakhs for Fiscal 2025 to ₹427.82 lakhs for Fiscal 2026, primarily due to increase in Profit before Tax.	Our Tax Expense increased to ₹218.38 lakhs for Fiscal 2025 from ₹55.11 lakhs for Fiscal 2024, primarily due to increase in Profit before Tax.
12	Profit after tax	For the reasons discussed above, Profit after tax has increased by 110.90% from ₹549.66 lakhs for Fiscal 2025 to ₹1,159.22 lakhs for Fiscal 2026 on account of various factors as explained herein above.	Profit after tax has increased by 78.39% to ₹549.66 lakhs for Fiscal 2025 from ₹308.13 lakhs for Fiscal 2024 on account of various factors as explained herein above.

CAPITAL REQUIREMENTS

i. From the proceeds of the IPO, our Company proposes to undertake the expansion of our manufacturing plant by increasing the sugarcane crushing capacity from 1,250 TCD (Metric Tonnes Crushed per Day) to 2,000 TCD. The intended expansion is proposed considering that our Company has been utilising ~ 90% (average) of its existing crushing capacity. This capacity expansion is expected to enhance the operational efficiency of the plant and enable our Company to process a significantly higher volume of sugarcane during the crushing season. Consequently, the production of Jaggery Powder & Khandsari Sugar and other by-products is expected to increase proportionately, subject to the availability of adequate sugarcane and prevailing market conditions.

In this regard, our Company has finalized the quotation dated June 19, 2026 from M/s. N.R. Fabricators and Erectors for the design, manufacturing, supply, erection and commissioning of milling house & boiling house equipment required for the upgraded crushing capacity.

For further details relating to the capital expenditure, kindly refer to Sub-head titled "Capital Expenditures" under head titled "Details of the Objects of the Issue" in the Chapter titled "Objects of the Issue" on page no. 97 of this Draft Red Herring Prospectus

ii. Our Company proposes to utilize a portion of the Net Proceeds from the Issue towards the repayment and/or prepayment, in full or in part, of certain secured outstanding borrowings from the Financial Institutions/Banks. The repayment of these borrowings is expected to reduce our Company's debt obligations, lower finance costs, improve its debt-to-equity ratio and strengthen its overall financial position.

For further details relating to the secured borrowing to be repaid, kindly refer to Sub-head titled "Pre-Payment/Re-Payment, in part or full, of certain outstanding Borrowings of our Company" under head titled "Details of the Objects of the Issue" in the Chapter titled "Objects of the Issue" on page no. 100 of this Draft Red Herring Prospectus.

CASH FLOW

The table below summaries our cash flows from our Restated Financial Statement for financial year ended March 31, 2026, 2025, and 2024:

(₹ in Lakhs)

Particulars	For the Financial Years ended March 31,		
	2026	2025	2024
Net cash (used in)/ Generated from operating activities	504.19	1,324.17	(1,778.64)
Net cash (used in)/ Generated from investing activities	(1,020.11)	(64.47)	(2,063.02)
Net cash (used in)/ Generated from finance activities	533.83	(1,171.21)	3,687.22

For risk associated with respect to negative cash flow kindly refer to Risk Factor No 8 mentioned in Section titled 'Risk Factors' on page no. 29 of this Draft Red Herring Prospectus.

YEAR ON YEAR COMPARISON OF COMPONENTS OF THE CASH FLOW STATEMENT

Cash flow from Operating Activities:

Sr. No.	Particulars	Fiscal 2026 to Fiscal 2025	Fiscal 2025 to Fiscal 2024
1	Profit before tax	Profit before tax has increased from ₹768.04 lakhs for Fiscal 2025 to ₹1,587.04 lakhs for Fiscal 2026.	Profit before tax has increased to ₹768.04 lakhs for Fiscal 2025 from ₹363.24 lakhs for Fiscal 2024
2	Depreciation	Depreciation being the non cash items, thus the same has been added to the Profit before tax for the purpose of computation of the cashflow from operations. Our depreciation and amortization expense increased from ₹158.97 Lakhs for Fiscal 2025 to ₹175.33 Lakhs for Fiscal 2026.	Depreciation being the non cash items, thus the same has been added to the Profit before tax for the purpose of computation of the cashflow from operations. Our depreciation and amortization expense increased from ₹147.79 Lakhs for Fiscal 2024 to ₹158.97 Lakhs for Fiscal 2025.

Sr. No.	Particulars	Fiscal 2026 to Fiscal 2025	Fiscal 2025 to Fiscal 2024
3	Interest Income	Interest Income is adjusted to the Profit before tax for the purpose of computation of the cashflow from operations. Interest Income is ₹19.58 Lakhs for Fiscal 2026 and ₹12.12 Lakhs for Fiscal 2025.	Interest Income is adjusted to the Profit before tax for the purpose of computation of the cashflow from operations. Interest Income is ₹12.12 Lakhs for Fiscal 2025 and ₹8.15 Lakhs for Fiscal 2024.
4	Finance Cost (Interest paid)	Finance Cost is adjusted to the Profit before tax for the purpose of computation of the cashflow from operations. Finance Cost decreased to ₹685.96 Lakhs for Fiscal 2026 from ₹801.53 Lakhs for Fiscal 2025.	Finance Cost is adjusted to the Profit before tax for the purpose of computation of the cashflow from operations. Finance Cost increased to ₹801.53 Lakhs for Fiscal 2025 from ₹460.91 Lakhs for Fiscal 2024.
5	Changes in the working capital	• Increase in inventories - ₹ 783. 98 lakhs • Increase in trade receivables- ₹708.67 lakhs • Increase in other current assets - ₹424.64 lakhs • Increase in trade payable - ₹378.82 lakhs • Increase in other current liabilities - ₹ 3.93 lakhs • Increase in long term provisions - ₹4.24 lakhs • Increase in the short term provisions - ₹155.06 lakhs • Increase in other non current assets - ₹265.21 lakhs	• Increase in inventories - ₹85.61 lakhs • Decrease in trade receivables- ₹251.80 lakhs • Increase in other current assets - ₹125.64 lakhs • Decrease in trade payable - ₹1,089.56 lakhs • Increase in other current liabilities - ₹784.87 lakhs • Increase in long term provisions - ₹2.83 lakhs • Increase in short term provisions - ₹0.25 lakhs • Increase in other non current assets - ₹78.49 lakhs
6	Direct tax paid	Direct tax paid is ₹284.11 lakhs for Fiscal 2026 and ₹52.70 lakhs for Fiscal 2025	Direct tax paid is ₹ 52.70lakhs for Fiscal 2025 and ₹15.96 lakhs for Fiscal 2024

Cash flow from Investing Activities:

Sr.No.	Particulars	Fiscal 2025 to Fiscal 2026	Fiscal 2024 to Fiscal 2025
1	Purchase of Property, Plant and Equipment	Purchase of Property, Plant and Equipment amounted to ₹1,377.72 lakhs for Fiscal 2026 and ₹435.49 lakhs for Fiscal 2025.	Purchase of Property, Plant and Equipment amounted to ₹435.49 lakhs for Fiscal 2025 and ₹5,619.82 lakhs for Fiscal 2024.
2	Sale of Property, Plant and Equipment from CWIP to PPE	Transfer of Property, Plant and Equipment from CWIP to PPE amounted to ₹266.98 lakhs during the FY 2025-2026.	Transfer of Property, Plant and Equipment from CWIP to PPE amounted to ₹4,217.08 lakhs during the FY 2023-2024.
3	Non current investments	Increase in the non-current investments amounted to ₹5.05 lakhs for Fiscal 2026.	Decrease in the non-current investments amounted to ₹601 lakhs for Fiscal
4	Short term loans and advances	Decrease in short term loans and advances amount to ₹76.10 lakhs for Fiscal 2026.	Increase in the short term loans and advances amount to ₹242.10 lakhs for Fiscal 2025.
5	Interest income on Fixed deposits	Interest Income is adjusted for the purpose of computation of the cashflow from investing activities. Interest Income is ₹19.58 Lakhs for Fiscal 2026 and ₹12.12 Lakhs for Fiscal 2025.	Interest Income is adjusted for the purpose of computation of the cashflow from investing activities. Interest Income is ₹12.12 Lakhs for Fiscal 2025 and ₹8.15 Lakhs for Fiscal 2024.

Cash flow from Financing Activities:

Sr.No.	Particulars	Fiscal 2026 to Fiscal 2025	Fiscal 2025 to Fiscal 2024
1	Capital issued during the year	-	Equity and Preference Capital issued during the year cumulatively amounted to ₹ 980 lakhs during the FY 2023-2024.
2	Redemption of preference shares	Our Company redeemed the preference shares to the extent of ₹ 500.00 lakhs during the FY 2025-2026.	-
2	Long term borrowings	Increase in the long term borrowings amounting to ₹393.86 lakhs during the FY 2025-2026.	Decrease in the long term borrowings amounting to ₹962.84 lakhs during the FY 2024-2025.
3	Short term borrowings	Increase in the short term borrowings amounting to ₹1,325.93 lakhs for Fiscal 2026.	Increase in the short term borrowings amounting to ₹593.16 lakhs for Fiscal 2025.
4	Finance Cost	Finance cost is adjusted for the purpose of computation of the cashflow from financing activities. Finance Cost is ₹685.96 Lakhs for Fiscal 2026 and ₹801.53 Lakhs for Fiscal 2025.	Finance cost is adjusted for the purpose of computation of the cashflow from financing activities. Finance Cost is ₹801.53 Lakhs for Fiscal 2025 and ₹460.91 Lakhs for Fiscal 2024.

CONTINGENT LIABILITIES AND OFF BALANCE SHEET ARRANGEMENTS

(in Lakhs)

Particulars	As at March 31, 2026	As at March 31, 2025	As at March 31, 2024
Tax Deducted at source	20.91	6.87	0.04
Bank guarantee	0.50	-	-

For risk associated with respect to contingent liability kindly refer to Risk Factor No 14 mentioned in Section titled 'Risk Factors' on page no. 35 of this Draft Red Herring Prospectus.

RELATED PARTY TRANSACTION BASED ON REVENUE FOR PAST THREE FINANCIAL YEAR

Names of the related parties with whom transaction were carried out during the years and description of relationship:

Name	Description of Relationship
Dattatray Kashinath Kulkarni	Director
Dipali Dattatraya Kulkarni	Director
Shree Siddhivinayak Foodtech Farmer Producer Company	Director and Promoter of the Issuer Company holds shares in the said company
Shree Siddhivinayak Agritech Industries Limited	Director and Promoter of the Issuer Company holds shares in the said company
Shri Siddhivinayak Social Foundation	Foundation promoted by the Promoter of the Issuer Company
Ganesh Kamate	SMP
Mangesh Prabhakar Kulkarni	Relative of Director
Shri Siddhivinayak Petroleum	Proprietorship of Director

(The rest of the page is intentionally left blank)

Details of Related Party Transactions:

(in lakhs)

Particulars	For the year ended March 31, 2026	For the year ended March 31, 2025	For the year ended March 31, 2024
Balance Sheet Item			
Unsecured Loans Balance			
Dattatray Kashinath Kulkarni	408.60	409.75	10.25
Dipali Dattatraya Kulkarni	2,113.11	677.14	0.00
Total Related Party loan balance	**2,521.71**	**1,086.89**	**10.25**
Total Loan outstanding balance as per RFS	8,995.37	7,275.58	7,645.26
% of RPT loan to Total loan	**28.03**	**14.94**	**0.13**

(in lakhs)

Particulars	For the year ended March 31, 2026	For the year ended March 31, 2025	For the year ended March 31, 2024
Profit and Loss Account Item in terms of Revenue			
Sale			
Shree Siddhivinayak Foodtech Farmer Producer Company	0.00	162.00	336.00
Total Related Party sales	**0.00**	**162.00**	**336.00**
Total sales as per RFS	7,526.77	5,856.63	3,627.64
% of RPT Sales to Total Sales	**0.00**	**2.77**	**9.26**

(in lakhs)

Particulars	For the year ended March 31, 2026	For the year ended March 31, 2025	For the year ended March 31, 2024
Profit and Loss Account Item in terms of Expense			
Purchase			
Shri Siddhivinayak Petroleum	10.99	0.06	11.72
Shree Siddhivinayak Agritech Industries Limited	0.00	0.00	340.16
Rent (Including GST) - Expense			
Dattatray Kashinath Kulkarni	54.60	26.36	16.40
Vehicle Rent			
Dipali Dattatraya Kulkarni	7.20	1.20	0.00
H&T Bill			
Dipali Dattatraya Kulkarni	49.88	15.25	41.54
Ganesh Kamate	16.04	11.16	31.01
Mangesh Prabhakar Kulkarni	9.66	0.00	0.00
CSR Expense			
Shri Siddhivinayak Social Foundation	7.39	0.00	0.00
Salary			
Ganesh Kamate	7.39	6.18	4.82
Total Related Party Expenses	**163.15**	**60.20**	**445.66**
Total sales as per RFS	7526.77	5856.63	3627.64
% of RPT Expenses to Total Sales	**2.17**	**1.03**	**12.29**

(The rest of the page is intentionally left blank)

CUSTOMER CONCENTRATION

a) In respect of Jaggery Powder, top ten customers of our Company for the last 3 financial years are provided hereunder:

Category of customers	FY 2025-2026		FY 2024-2025		FY 2023-2024	
	₹ in Lakhs	% of total sale of Jaggery Powder	₹ in Lakhs	% of total sale of Jaggery Powder	₹ in Lakhs	% of total sale of Jaggery Powder
Top 5 Customers	4792.24	73.80	4896.59	96.40	2596.44	78.69
Top 10 Customers	5976.75	92.04	5056.31	99.55	3299.58	100.00

b) In respect of Khandsari Sugar, top ten customers of our Company for the last 3 financial years are provided hereunder:

Category of customers	FY 2025-2026		FY 2024-2025		FY 2023-2024	
	₹ in Lakhs	% of total sale of Khandsari Sugar	₹ in Lakhs	% of total sale of Khandsari Sugar	₹ in Lakhs	% of total sale of Khandsari Sugar
Top 5 Customers	85.21	100.00	NA	NA	NA	NA
Top 10 Customers	85.21	100.00	NA	NA	NA	NA

Note: Our Company started the manufacturing of Khandsari Sugar during FY 2025-2026.

c) In respect of Jaggery-based pre-mix products, top ten customers of our Company for the last 3 financial years are provided hereunder:

Category of customers	FY 2025-2026		FY 2024-2025		FY 2023-2024	
	₹ in Lakhs	% of total sale of FMCG Jaggery-based pre-mix products	₹ in Lakhs	% of total sale of FMCG Jaggery-based pre-mix products	₹ in Lakhs	% of total sale of FMCG Jaggery-based pre-mix products
Top 5 Customers	81.05	85.02	439.55	99.98	NA	NA
Top 10 Customers	90.76	95.21	439.65	100.00	NA	NA

d) In respect of By Products, top ten customers of our Company for the last 3 financial years are provided hereunder:

Category of customers	FY 2025-2026		FY 2024-2025		FY 2023-2024	
	₹ in Lakhs	% of total sale of By Products	₹ in Lakhs	% of total sale of By Products	₹ in Lakhs	% of total sale of By Products
Top 5 Customers	212.75	74.36	301.41	89.27	297.23	90.60
Top 10 Customers	265.00	92.62	327.74	97.06	325.34	99.17

e) In respect of Cane Seeds, top ten customers of our Company for the last 3 financial years are provided hereunder:

Category of customers	FY 2025-2026		FY 2024-2025		FY 2023-2024	
	₹ in Lakhs	% of total sale of Cane Seeds	₹ in Lakhs	% of total sale of Cane Seeds	₹ in Lakhs	% of total sale of Cane Seeds
Top 5 Customers	41.37	7.30	0.00	0.00	NA	NA
Top 10 Customers	72.45	12.79	0.00	0.00	NA	NA

Note: Our Company started nursery for Cane seeds during FY 2025-2026.

Note: Name of the customers is not disclosed due to absence of consents.

For risk associated with respect to our customers kindly refer to Risk Factor No 3 mentioned in Section titled 'Risk Factors' on page no. 25 of this Draft Red Herring Prospectus.

SUPPLIER CONCENTRATION

Top ten suppliers with respect to Sugarcane, for the last 3 financial years are provided hereunder**:**

Category of suppliers	FY 2025-2026		FY 2024-2025		FY 2023-2024	
	₹ in Lakhs	% of total purchases	₹ in Lakhs	% of total purchases	₹ in Lakhs	% of total purchases
Top 5 Suppliers	65.49	1.78	53.70	2.01	82.49	1.75
Top 10 Suppliers	111.65	3.03	91.72	3.43	141.68	3.00

Note: Name of the suppliers is not disclosed due to absence of consents.

AUDITORS OBSERVATION

Financial Year / Period	Nature of Adverse Observation (Reservations, qualifications, adverse remarks, matters of emphasis or Other Matter)	Details of Adverse Observations	Company's response to reservations, qualifications, adverse remarks or matters of emphasis, including any corrective measures	Impact on the financial statements and financial position of the Company
There are no adverse observations identified by the Auditor for Fiscal 2026, 2025 and 2024 as per the Restated Financial Statements.				

(For the above details relating to adverse observations, we have relied upon the certificate dated July 10, 2026, issued by the Statutory Auditors of our Company i.e., M/s. A N Gawade & Co. LLP, Chartered Accountants)

SIGNIFICANT DEVELOPMENTS SUBSEQUENT TO THE LAST AUDITED PERIOD:

In the opinion of the Board of Directors of our Company, since the date of the last audited period i.e., March 31, 2026, as disclosed in this Draft Red Herring Prospectus, there are no circumstances that materially or adversely affect or are likely to affect the profitability of our Company or the value of its assets or its ability to pay its material liabilities within the next twelve months.

(For the above details relating to material developments since the last restated financial statements, we have relied upon the certificate dated July 10, 2026 issued by the Statutory Auditors of our Company i.e., M/s. A N Gawade & Co. LLP, Chartered Accountants)

INFORMATION REQUIRED AS PER ITEM 11 (II) (C) (IV) OF PART A OF SCHEDULE VI TO THE SEBI REGULATIONS:

1. **Unusual or infrequent events or transactions**
   To our knowledge there have been no unusual or infrequent events or transactions that have taken place during the last three (3) years.

2. **Significant economic changes that materially affected or are likely to affect income from continuing operations.**
   Our business has been subjected to and we expect it to continue to be subjected to significant economic changes arising from the trends identified above in 'Factors Affecting our Results of Operations' and the uncertainties described in the *Section titled "Risk Factors" beginning on page no. 22 of this Draft Red Herring Prospectus*. To our knowledge, except to the extent of disclosures made in this Draft Red Herring Prospectus, there are no known factors which we expect to bring about significant economic changes.

3. **Income and Sales on account of major product/main activities**
   Our Company is engaged in the production and sale of Jaggery Powder, Khandsari Sugar, and its by products, Jaggery based pre-mix products and Sugarcane seeds which is our core business from which we derive our revenues.

4. **Whether our Company has followed any unorthodox procedure for recording sales and revenues**
Our Company has not followed any unorthodox procedure for recording sales and revenues.

5. **Known trends or uncertainties that have had or are expected to have a material adverse impact on sales, revenue or income from continuing operations.**
Apart from the risks as disclosed under *Section titled "Risk Factors" beginning on page 22 of this Draft Red Herring Prospectus*, in our opinion there are no other known trends or uncertainties that have had or are expected to have a material adverse impact on revenue or income from continuing operations.

6. **Extent to which material increases in net sales or revenue are due to increased sales volume, introduction of new products or services or increased sales prices**
Changes in revenue in the last three financial years are explained in the part titled *"Year on year comparison of components of the Income Statement".*

7. **Total Turnover of each Major Industry Segment in which the Issuer Operates.**
Our business is limited to a single reportable segment

8. **Status of any publicly announced new products or business segment.**
Our Company has not announced any new products or business segment.

9. **The extent to which business is seasonal.**
The sugarcane is a seasonal crop. Primarily the sugarcane crop is grown as a long-duration crop, planted during the spring (February-April) and/or autumn (September-October) seasons, depending on the region and harvested after 10 to 18 months, depending on the variety and climatic conditions. It is a highly versatile and adaptable crop, but its cultivation is tied to specific seasonal conditions, particularly water availability, rainfall and temperature, making it a seasonal crop globally, not just in India. The primary impact of seasons on the business is pricing in relation to the procurement of the raw sugarcane, which may have an adverse effect on our business, results of operations, financial condition and cash flows could be adversely affected.

For risk associated with respect to seasonality of business operations kindly refer to Risk Factor No 4 mentioned in Section titled 'Risk Factors' on page no. 26 of this Draft Red Herring Prospectus.

10. **Competitive conditions.**
Competitive conditions are as described under the *head 'Competition' under Chapters titled "Business Overview" on page no. 179 of this Draft Red Herring Prospectus*.

(The rest of the page is intentionally left blank)

CAPITALISATION STATEMENT

The following table sets forth our Company's capitalization as of March 31, 2026, derived from our Restated Financial Statements and as adjusted for the Issue. This table should be read in conjunction with *section titled "Risk Factors", chapter titled "Restated Financial Statements" and "Management Discussion and Analysis of Financial Position Results of Operations" on page no. 22, 227 and 265 respectively of this Draft Red Herring Prospectus.*

Statement of Capitalisation ***(₹ in Lakhs)***

Particulars	Pre Issue	Post Issue
Debt		
Short Term Debt	5,003.75	[●]
Long Term Debt (Including Current Maturity)	3,991.62	
Total Debt	**8,995.37**	
Shareholders' Fund (Equity)		
Share Capital	490.00	
Reserves & Surplus	2,017.01	
Less: Miscellaneous Expenses not w/off	-	
Total Shareholders' Fund (Equity)	**2,507.01**	
Long Term Debt/Equity	**1.59**	
Total Debt/Equity	**3.59**	

Notes:

1. Short term debts represents the debts which are expected to be paid/payable within 12 months and excludes instalment of term loans repayable within 12 months.
2. Long term debts represent debts other than Short term debts as defined above but includes instalment of term loans repayable within 12 months grouped under Short term debt.
3. The figures disclosed above are based on restated statement of assets and liabilities of our Company as at March 31, 2026. Effect of Increase in Capital after March 31, 2026 not taken.

(The rest of the page is intentionally left blank)

FINANCIAL INDEBTEDNESS

Our Company has availed borrowings in the ordinary course of the business. Set forth below is a brief summary of the aggregate outstanding borrowings as on 31-03-2026.

Statement of terms of loans and security details -

(Amount in Lakhs)

Name of Lender/Fund	Nature of Facility	Sanctioned Amount	Securities offered	Re-Payment Period	Rate of Interest as per sanction	Rate of Interest as on 31st March 2026	Type of Interest	Outstanding amount (as per Books) as on 31st March, 2026
Secured Loans:								
HDFC Bank	Term Loan	3,672.00	Refer Note 1	70 months	8.75 % p.a.	8.50 % p.a.	Floating	3,200.97
HDFC Bank	Term Loan	850.00	Refer Note 1	84 months	9.00 % p.a.	9.00 % p.a.	Fixed	790.65
Total								**3,991.62**
Cash Credit:								
HDFC Bank	Cash Credit	400.00	Refer Note 1	12 months	8.75 % p.a.		Floating	399.66
HDFC Bank	Seasonal Cash Credit	500.00	Refer Note 1	07 months	8.75 % p.a.		Floating	-
DNS Bank	Cash Credit (Pledge of Jaggery powder stock)	4,000.00	ReferNote 2	On demand	9.40% p.a.	9.40% p.a.	Floating	2,082.38
Total								**2,482.04**
Unsecured Loans:								
Dattatray Kashinath Kulkarni								408.60
Dipali Dattatray Kulkarni								2,113.11
Total								**2,521.71**

Note 1: Nature/ Description of Security of HDFC Bank:

a. Primary Security:
Debtors, Fixed Deposit, Plant and Machinery for takeover and proposed Tl, Pledge stock, Stock.

b. Collateral Security:

Equitable Mortgage of following properties:

i. Gut No. 912 Part Near Jagdamba Temple Village Khamaswadi Industrial Plot No. 01 And 02 M/s. Shree Sidhivinayak Greentech Industries Pvt. Ltd Moha Dhoki Road Tq. Kalamb Dist. Osmanabad Osmanabad Maharashtra 413507, Industrial Property used for commercial activity. (Name of the owner: Mr Dattatray Kashinath Kulkarni)

ii. Sy.no18/1 19and 20/3 Near Chandrama Residency Artemis Road Off Sun City Road Flat No.701 7th Floor Building Aura Artemis Co. operative Housing Society Ltd. Situated At Vadgaon Bk Anand Nagar Tq. Haveli Dist. Pune Pune Maharashtra 411051, Residential F Flat, Apartment. (Name of the owner: Mr. Mukund Kashinathrao Kulkarni)

iii. Gut No. 911 Part Village Khamaswadi At Moha Dhoki Road Near Jagdamba Temple Beside M/s. Shree Sidhivinayak Greentech Industries Pvt. Ltd Tq. Kalamb Dist. Osmanabad Osmanabad Maharashtra 413507, Industrial Property used for commercial activity. (Name of the owner: Mr. Dattatray Kashinath Kulkarni)

iv. Sy. No.113/A/1 Part Near Shree Sidhivinayak Agritech Industries Ltd Plot No.1 At. Village Limit Mouje Katgaon Tq.tuljapur Dist. Osmanabad Osmanabad Maharashtra 413623, Commercial-open Land (Name of the owner: Mr. Dattatray Kashinath Kulkarni)

v. Sy No 203/4 Osmanabad Commercial Open Land Front Of Tapre Building And Hotel Kesari Wada Bypass Road Waruda Road National Highway Touch Osmanabad Maharashtra 413501, Vacant Land. (Name of the owner: Mr. Dattatray Kashinath Kulkarni)

c. Guarantors:

i. Mr. Dinesh Mukund Kulkarni
ii. Mr. Mukund Kashinathrao Kulkarni
iii. Mr. Ganesh Ashok Kamte
iv. Prathmesh Jagdish Awate
v. Mr. Dattatray Kashinath Kulkarni
vi. Mrs. Dipali Dattatraya Kulkarni

Note 2: Nature/ Description of Security of DNS Bank:

a. Primary Security:
Exclusive First Charge on stock of Jaggery Powder and/or Khandsari Sugar kept at "Godown No. 01, Ground Floor, M. Pawar Wearhouse, Plot Number 01 & Block Number A-29, Main Road, Diksal MIDC, Diksal, Kalanb, Dharashiv- 413 507" vide Stock pledger.

b. Personal Guarantee:

i. Mr. Dattatray Kashinath Kulkarn
ii. Mrs. Dipali Dattatraya Kulkarni
iii. Mr. Dinesh Mukund Kulkarni

[For the above details relating financial indebtedness we have relied upon the certificate dated July 10, 2026, issued by the Statutory Auditors of our Company i.e., M/s. A N Gawade & Co. LLP, Chartered Accountants]

[For risk related to borrowings, kindly refer to Risk Factor No 28, 29 and 30 mentioned in Section titled 'Risk Factors' beginning of page no.43 of this Draft Red Herring Prospectus & For risk related to personal guarantees provided by our Promoters, kindly refer to Risk Factor No 32 mentioned in Section titled 'Risk Factors' on page no. 44 of this Draft Red Herring Prospectus.]

(The rest of the page is intentionally left blank)

SECTION VII: LEGAL AND OTHER INFORMATION

OUTSTANDING LITIGATION AND MATERIAL DEVELOPMENT

In accordance with SEBI ICDR Regulations, Our Company, our Director, our Promoters, our Group Companies and our Subsidiary Companies are subject to various legal proceedings from time to time, mostly arising in the ordinary course of our business. Except as stated in this section, there are no:

(i) Criminal Proceedings;

(ii) Actions by statutory or regulatory authorities;

(iii) Disciplinary action including penalty imposed by SEBI or stock exchange in the last five financial years including outstanding actions;

(iv) Claims relating to direct and indirect taxes; and

(v) Material litigation (as defined below);

*Our Board of Directors, in its meeting held on June 01, 2026, determined that outstanding litigation involving Our Company, our Director, our Promoters, our Group Companies and our Subsidiary Companies shall be considered material (**"Material Litigation")** if the value or expected impact in terms of value, exceeds the lower of the following:*

a. two percent of turnover, as per the latest annual restated consolidated financial statements of the issuer; or
b. two percent of net worth, as per the latest annual restated consolidated financial statements of the issuer, except in case the arithmetic value of the net worth is negative; or
c. five percent of the average of absolute value of profit or loss after tax, as per the last three annual restated consolidated financial statements of the issuer.

Based on the above materiality policy, the lowest of the above amount is ₹ 33.62 Lakhs.

Further, in accordance with the eligibility criteria for listing on NSE Emerge Platform, except as stated in this section, there are no other outstanding litigation involving the following entities over and above the entities listed hereinabove i.e, (a) companies promoter by our promoters.

*Our Board of Directors, in its meeting held on June 01, 2026, determined that a creditor of the Company shall be considered to be material for the purpose of disclosure in the issue Documents, if amounts due to such creditor exceeds 10% of the total consolidated trade payables of the Company as per the latest restated financial statements of the Company, as disclosed in the Issue Documents . ("**Material Dues**").*

Details of outstanding dues to creditors (including micro and small enterprises as defined under the Micro, Small and Medium Enterprises Development Act, 2006) as required under the SEBI (ICDR) Regulations have been disclosed on our website at https://shreesiddhivinayakgreentech.com/investors/

Our Company, its Directors and its Promoters are not Wilful Defaulters and there have been no violations of securities laws in the past or pending against them.

I. LITIGATION RELATING TO THE COMPANY

A. LITIGATIONS FILED AGAINST OUR COMPANY:

i. All criminal proceedings:

Nil

ii. All actions by regulatory authorities and statutory authorities:

Nil

iii. Claims related to direct and indirect taxes:

a. Direct Tax:

- **E- proceedings:**

Assessment Year	Description	Amount (in ₹)	Current Status
2025-26	An Adjustment notice under section 143(1)(a) of Income Tax Act 1961 dated December 24, 2025, vide DIN: EFL/2526/G22/ITR000805884010 was issued to our Company. A notice under section 143(1)(a) is issued for inconsistencies / incorrect claim /error in return filed. The said e-proceeding is being shown as pending on the portal of Income Tax. However, no copy of notice has been physically provided by income tax department, nor any notice has been issued on the portal	Not Ascertainable	Pending
2024-25	An Adjustment notice under section 143(1)(a) of Income Tax Act 1961 dated October 30, 2024, vide DIN: EFL/2425/G22/ITR000700897774 was issued to our Company. A notice under section 143(1)(a) is issued for inconsistencies / incorrect claim /error in return filed. The said e-proceeding is being shown as pending on the portal of Income Tax. However, no copy of notice has been physically provided by income tax department, nor any notice has been issued on the portal	Not Ascertainable	Pending

- **Outstanding Demand:**

  Nil

- **Tax Deduction at Source:**

Sr. No	Financial Year	Total Default (in ₹)
1.	2025-26	20,90,650
2.	2024-25	6,87,200
3.	2023-24	3,710
4.	2022-23	52,020
Total		**28,33,580**

b. Indirect Tax:

Nil

iv. Pending matters, which if they result in an adverse outcome, would materially and adversely affect the operations or the financial position of our Company

Nil

B. LITIGATIONS FILED BY OUR COMPANY

i. All Criminal Proceedings:

Nil

ii. **Pending matters, which if they result in an adverse outcome, would materially and adversely effect the operations or the financial position of our Company:**

Nil

II. LITIGATION INVOLVING OUR PROMOTERS:

A. LITIGATION AGAINST OUR PROMOTERS:

i. All criminal Proceedings:

Nil

ii. All actions by regulatory authorities and statutory authorities

Nil

iii. Claims related to direct and indirect taxes:

a. Direct Tax

- **E-proceedings**

Assessment Year	Description	Amount (in ₹)	Current Status
DATTATRAY KASHINATH KULKARNI			
2022-23	An Adjustment notice under section 143(1)(a) of Income Tax Act 1961 dated November 11, 2022, vide DIN: EFL/2223/G22/ITR00046919038 was issued to our Promoter A notice under section 143(1)(a) is issued for inconsistencies / incorrect claim /error in return filed. The said e-proceeding is being shown as pending on the portal of Income Tax. However, no copy of notice has been physically provided by income tax department, nor any notice has been issued on the portal	Not Ascertainable	Pending
2021-22	An Adjustment notice under section 143(1)(a) of Income Tax Act 1961 dated April 08, 2022, vide DIN: EFL/2122/G22/ITR000205514143 was issued to our Promoter. A notice under section 143(1)(a) is issued for inconsistencies / incorrect claim /error in return filed. The said e-proceeding is being shown as pending on the portal of Income Tax. However, no copy of notice has been physically provided by income	Not Ascertainable	Pending

	tax department, nor any notice has been issued on the portal		
2020-21	An Adjustment notice under section 143(1)(a) of Income Tax Act 1961 dated October 25, 2021, vide DIN: EFL/2021/G22/9708402406 was issued to our Promoter. A notice under section 143(1)(a) is issued for inconsistencies / incorrect claim /error in return filed. The said e-proceeding is being shown as pending on the portal of Income Tax. However, no copy of notice has been physically provided by income tax department, nor any notice has been issued on the portal	Not Ascertainable	Pending

- **Outstanding Demand**

Assessment Year	Section Code	Demand Identification Number	Date on which demand is raised	No. of Defaults	Outstanding Demand (in ₹)	Accrued / Final Interest (in ₹)
DATTATRAY KASHINATH KULKARNI						
2009	1431a	201120091005853533 3T	September 27, 2011	One	24,250/-	69,354/-
2019	1431a	ITBA/RCV/S/221/2021-22/1036690305(1)	November 01, 2021	One	3,950/-	-
2020	1431a	202120203702802876 3T	December 10, 2021	One	-	62/-
2021	1431a	2022202137077921806T	July 05, 2022	One	3,84,530/-	1,80,715/-
2022	1431a	2022202237149094902T	February 01, 2023	One	2,86,540/-	1,14,600/-
Total					6,99,270	3,64,731

b. Indirect Tax:

Nil

iv. Disciplinary action including penalty imposed by SEBI or Stock Exchanges against the promoters in the last five financial years including outstanding action:

Nil

v. Other Matter based on Materiality Policy of Our Company:

Nil

B. LITIGATION FILED BY OUR PROMOTERS:

i. All criminal proceedings:

Nil

ii. Other matters based on Materiality Policy of our Company:

Nil

III. LITIGATION INVOLVING OUR DIRECTORS (OTHER THAN PROMOTERS)

A. LITIGATION AGAINST OUR DIRECTORS (OTHER THAN PROMOTERS):

i. All criminal proceedings:

Nil

ii. All actions by regulatory authorities and statutory authorities:

Nil

iii. Claims related to direct and indirect taxes:

a. Direct Tax

- **E-proceeding:**

  Nil

- **Outstanding Demand:**

  Nil

b. Indirect Tax:

Nil

iv. Other Matters based on Materiality Policy of our Company:

Nil

B. LITIGATIONS FILED BY OUR DIRECTORS (OTHER THAN PROMOTERS):

i. All criminal proceedings:

Nil

ii. Other Matters based on Materiality Policy of our Company:

Nil

IV. LITIGATION INVOLVING OUR KMPs & SMPs

A. LITIGATION FILED AGAINST OUR KMPs AND SMPs:

i. All criminal proceedings:

Nil

ii. All actions by regulatory authorities and statutory authorities:

Nil

B. FILED BY OUR KMPs AND SMPs:

i. All criminal proceedings:

Nil

ii. Other matters based on Materiality Policy of our Company:

Nil

V. LITIGATION INVOLVING OUR GROUP COMPANIES

A. LITIGATION FILED AGAINST OUR GROUP COMPANIES:

i. All criminal proceedings:

Nil

ii. All actions by regulatory authorities and statutory authorities:

Nil

iii. Claims related to direct and indirect taxes:

a. Direct Tax:

- **E-proceeding:**

Nil

- **Outstanding Demand**

Assessment Year	Section Code	Demand Identification Number	Date on which demand is raised	No. of Defaults	Outstanding Demand (in ₹)	Accrued / Final Interest (in ₹)
Shree Siddhivinayak Foodtech Farmer Producer Company Limited						
2023	1431a	20232023372170928 26C	November 16, 2023	One	3230/-	992/-
Total					3230/-	992/-

- **Tax Deduction at Source:**

Sr. No	Financial Year	Total Default (in ₹)
Shree Siddhivinayak Agritech Industries Limited		
1.	2025-26	15,24,630
2.	2024-25	30
3.	2021-22	990
Total		**15,25,650**

b. Indirect Tax:

Sr. No	Reference ID	Tax Period	Particulars	Amount of Demand (in ₹)
Shree Siddhivinayak Agritech Industries Limited				
1	ZD270225011796D	2022-23	A notice under dated February 04, 2025, was received by the Company stating that upon verification of record it was found that excess input tax credit has been claimed. As per the notice the proposed tax liability amounted to ₹ 1,65,52,907.17. The Company filed its reply on February 20, 2025, stating that there is a mismatch in input tax credit mentioned in notice and the data present with the Company hence evidence in support of the same was submitted to the tax department. Subsequently a notice dated May 06, 2026, was received by the Company stating upon verification of records it was found that correct tax liability was not declared for FY 2022-23 and excess ITC has been availed hence raising tax liability to ₹ 1,70,91,466/- along with interest of ₹1,21,96,282/-. The Company filed its reply on May 21, 2026, stating difference in GSTR 3B and GSTR2A does not make Company ineligible to claim ITC, further stating that difference in GSTR-2A and GSTR 3B was attributable to legitimate prior year ITC of FY 2021-22. The Company further submitted documents supporting their claims and prayed for drop in proposed demand and treat ITC availed as legally valid. The response from the département is awaited.	2,92,87,748/-

B. LITIGATION FILED BY OUR GROUP COMPANIES:

i. All criminal proceedings:

a. ***In The Matter of Shri Siddhivinayak Agritech Industries Ltd. v. Navnath Vaijnath Jadhav vide reference (S.C.C. No. 2359/2025:***

Shri Siddhivinayak Agritech Industries Ltd. (herein after referred to as "Plaintiff") had filed a complaint before the Hon'ble Court of Chief Judicial Magistrate, Dharashiv, vide S.C.C. No. 2359/2025 dated July 4, 2025, under section 138 of the Negotiable Instruments Act, 1881 and section 318(4) of the Bharatiya Nyaya Sanhita, 2023. The present Complaint has been filed against the accused for dishonour of Cheque bearing No. 000006 dated April 9, 2025, for an amount of ₹ 9,98,101/-, issued towards discharge of debt arising from agreements executed for sugarcane crushing labour and transportation. The cheque was returned unpaid on April 11, 2025, with the remark "Refer to Drawer," following which the complainant issued a statutory legal notice which was served upon the accused. Despite receipt of the notice, the accused failed to make payment within the prescribed statutory period. Therefore, aggrieved by the non-payment of debt and dishonour of cheque, the plaintiff filed the said complaint praying for conviction of the accused under section 138 of the NI Act, direct the accused to pay compensation and such other reliefs as this Hon'ble Court may deem fit and proper.

b. In the matter of Shri Siddhivinayak Agritech Industries Ltd. v. Mehraj Akhil Sayyed vide reference (S.C.C. No. 2691/2025):

Shri Siddhivinayak Agritech Industries Ltd. (herein after referred to as "Plaintiff") had filed a complaint before the Hon'ble Court of the Chief Judicial Magistrate, Dharashiv, vide S.C.C. No. 2691/2025 dated August 12, 2025, under Section 138 of the Negotiable Instruments Act, 1881 and Section 318(4) of the Bharatiya Nyaya Sanhita, 2023. The present Complaint has been filed against the accused for dishonour of Cheque bearing No. 000021 dated May 21, 2025, for an amount of ₹ 8,31,136, issued towards discharge of debt arising from agreements executed for sugarcane crushing labour and transportation. The cheque was returned unpaid on May 23, 2025, with the remark "Funds Insufficient", following which the complainant issued a statutory legal notice which was served upon the accused. Despite receipt of the notice, the accused failed to make payment within the prescribed statutory period. Therefore, aggrieved by the non-payment of debt and dishonour of cheque, the plaintiff filed the said complaint praying for conviction of the accused under section 138 of the NI Act, direct the accused to pay compensation and such other reliefs as this Hon'ble Court may deem fit and proper.

c. In the matter of Shri Siddhivinayak Agritech Industries Ltd. v. Ilahi Mehboob Shaikh vide reference (SCCNO-804/2024):

Shri Siddhivinayak Agritech Industries Ltd. (herein after referred to as "Plaintiff") had filed a complaint before the Hon'ble Court of the Chief Judicial Magistrate, Dharashiv, vide S.C.C. No. 804/2024 dated May 17, 2024, under Section 138 of the Negotiable Instruments Act, 1881 and Section 420 of the Indian Penal Code, 1860. The present Complaint has been filed against the accused for dishonour of Cheque bearing No. 585148 dated February 26, 2024, for an amount of ₹ 3,50,098, issued towards discharge of debt arising from agreements executed for sugarcane crushing labour and transportation. The cheque was returned unpaid on February 27, 2024, with the remark "Funds Insufficient", following which the complainant issued a statutory legal notice which was served upon the accused. Despite receipt of the notice, the accused failed to make payment within the prescribed statutory period. Therefore, aggrieved by the non-payment of debt and dishonour of cheque, the plaintiff filed the said complaint praying for conviction of the accused under section 138 of the NI Act, direct the accused to pay compensation and such other reliefs as this Hon'ble Court may deem fit and proper.

d. In the matter of Shri Siddhivinayak Agritech Industries Ltd. v. Ashok Tukaram Satpute vide reference (SCCHO. 797/2024):

Shri Siddhivinayak Agritech Industries Ltd. (herein after referred to as "Plaintiff") had filed a complaint before the Hon'ble Court of the Chief Judicial Magistrate, Dharashiv, vide S.C.C. No. 797/2024 dated May 16, 2024, under Section 138 of the Negotiable Instruments Act, 1881 and Section 420 of the Indian Penal Code, 1860. The present Complaint has been filed against the accused for dishonour of Cheque bearing No. 000015 dated February 26, 2024, for an amount of ₹ 75,430, issued towards discharge of debt arising from agreements executed for sugarcane crushing labour and transportation. The cheque was returned unpaid on February 27, 2024, with the remark that the accused had insufficient funds, following which the complainant issued a statutory legal notice which was served upon the accused. Despite receipt of the notice, the accused failed to make payment within the prescribed statutory period. Therefore, aggrieved by the non-payment of debt and dishonour of cheque, the plaintiff filed the said complaint praying for conviction of the accused under section 138 of the NI Act and such other reliefs as this Hon'ble Court may deem fit and proper.

e. In the matter of Shri Siddivinayak Agritech Industries Ltd. v. Somnath Vasant Shinde vide reference (S.C.C No. 2317/2025):

Shri Siddhivinayak Agritech Industries Ltd. (herein after referred to as "Plaintiff") had filed a complaint before the Hon'ble Court of the Chief Judicial Magistrate, Dharashiv, vide S.C.C. NO. 2317/2025 dated June 26, 2025, under section 138 of the Negotiable Instruments Act, Section 318(4) of the Indian Penal Code. The present Complaint has been filed against the accused for dishonour of Cheque bearing No. 349767 dated April 9, 2025, for an amount of ₹ 31,07,038/-, issued towards discharge of debt arising from agreements executed for sugarcane crushing labour and transportation. The cheque was returned unpaid on April 11, 2025, with the remark "Refer to Drawer," following which the complainant issued a statutory legal notice that was served upon the accused. Despite receipt of the notice, the accused failed to make payment within the prescribed statutory period. Therefore, aggrieved by the non-payment of debt and dishonour of cheque, the plaintiff filed the said complaint praying for conviction of the accused under section 138 of the Negotiable Instruments Act and direct for compensation and such other reliefs as this Hon'ble Court may deem fit and proper.

f. In the matter of Shri Siddivinayak Agritech Industries Ltd. v. Ravi Sahebrao Kanbulkar vide reference (S.C.C No. 2690/2025):

Shri Siddhivinayak Agritech Industries Ltd. (herein after referred to as "Plaintiff") had filed a complaint before the Hon'ble Court of the Chief Judicial Magistrate, Dharashiv, vide S.C.C. NO. 2690 /2025 dated august 12, 2025, under section 138 of the Negotiable Instruments Act and Section 318(4) of the Indian Penal Code. The present Complaint has been filed before the Hon'ble Court under Section 138 of the Negotiable Instruments Act, 1881, against the accused for dishonour of Cheque No. 063496 dated May 20, 2025, for an amount of ₹ 4,09,479/-, issued towards discharge of a legally enforceable debt arising out of an agreement for sugarcane cutting and transportation services for the 2024–25 season. The cheque was returned unpaid on May 23, 2025, with the endorsement "Funds Insufficient," after which the complainant issued a statutory legal notice. Despite receipt of the notice, the accused failed to make payment of the cheque amount within the statutory period. Therefore, aggrieved by the non-payment of debt and dishonour of cheque, the plaintiff filed the said complaint praying for conviction of the accused under section 138 of the Negotiable Instruments Act and such other reliefs as this Hon'ble Court may deem fit and proper.

g. In the matter of Shri Siddivinayak Agritech Industries Ltd. v. Ramesh Manohar Magar vide reference (S.C.C No. 801/2024);

Shri Siddhivinayak Agritech Industries Ltd. (herein after referred to as "Plaintiff") had filed a complaint before the Hon'ble Court of the Chief Judicial Magistrate, Dharashiv, vide S.C.C. NO. 801 /2024 dated May 17, 2024, under section 138 of Negotiable Instruments Act and Section 420 of the Indian Penal Code. The present Complaint has been filed before the Hon'ble Court under Section 138 of the Negotiable Instruments Act, 1881, against the accused for dishonour of a cheque no. 054436 dated February 26, 2024, for an amount of ₹ 16,000/-, issued towards discharge of a legally enforceable debt arising from an agreement for sugarcane cutting labour and transportation for the 2022–23 crushing season. The cheque, deposited by the complainant at Solapur Janata Sahakari Bank,

Dharashiv Branch, was returned unpaid on February 27, 2024, with the endorsement "Funds Insufficient," following which a statutory legal notice was issued. Despite receipt of the notice, the accused failed to make payment of the cheque amount within the prescribed statutory period. Therefore, aggrieved by the non-payment of debt and dishonour of cheque, the plaintiff filed the said complaint praying for conviction of the accused under section 138 of the Negotiable Instruments Act and such other reliefs as this Hon'ble Court may deem fit and proper.

h. In the matter of Shri Siddivinayak Agritech Industries Ltd.) v. Rajkumar Babasaheb Kavchale vide reference (S.C.C No. 1717/2022):

Shri Siddhivinayak Agritech Industries Ltd. (herein after referred to as "Plaintiff") had filed a complaint before the Hon'ble Court of the Chief Judicial Magistrate, Osmanabad, vide S.C.C. NO. 1717 /2022 dated November 4, 2022, under section 138 of the Negotiable Instruments Act and Section 420 of the Indian Penal Code. The present Complaint has been filed before the Hon'ble Court under Section 138 of the Negotiable Instruments Act, 1881 against the accused for dishonour of a cheque dated August 11, 2022, for an amount of ₹ 1,27,095/-, issued towards discharge of a legally enforceable debt arising from a vehicle contract executed for the 2021–22 season. The cheque, drawn on the Bank of India, Mangalwedha Branch, was returned unpaid on August 12, 2022, with the endorsement "Funds Insufficient," following which the complainant issued a statutory legal notice dated September 08, 2022, which was duly received by the accused on September 16, 2022. Despite receipt of the notice, the accused failed to make payment of the cheque amount within the prescribed statutory period. Therefore, aggrieved by the non-payment of debt and dishonour of cheque, the plaintiff filed the said complaint praying for conviction of the accused under section 138 of the Negotiable Instruments Act and such other reliefs as this Hon'ble Court may deem fit and proper.

ii. Other matters based on Materiality Policy of our Company:

Nil

Please note that companies promoted by our promoter forms part of our Group Companies.

VI. LITIGATION INVOVLING OUR SUBSIDIARIES:

Our Company does not have any Subsidiary Company.

VII. OUTSTANDINGS DUE TO MICRO, SMALL AND MEDIUM ENTERPRISES OR ANY OTHER CREDITORS:

In accordance with our Company's materiality policy dated June 01, 2026 below are the details of the Creditors where there are outstanding amounts as on March 31, 2026 based on the restated financial statements:

S. No	Type of creditor	No. of cases	Amount outstanding (in ₹ lakhs)
1.	**Dues to micro, small and medium enterprises**	9	29.65
2.	**Dues to Material Creditor(s)**	1	184.96
3.	**Dues to Other Creditor**	1,135	1,490.01
	Total	**1,145**	**1,704.62**

VIII. MATERIAL DEVELOPMENTS SINCE THE LAST BALANCE SHEET:

Except as mentioned under the chapter titled "Management Discussion and Analysis of Financial Condition and Result of Operation" beginning on page no. 265 of this Draft Red Herring Prospectus, there have been no material developments, since the date of the last audited balance sheet.

(The rest of the page is intentionally left blank)

GOVERNMENT AND OTHER APPROVALS

Our Company has received the necessary consents, licenses, permissions, registrations and approvals from various governmental agencies and other statutory and/ or regulatory authorities, required for carrying out our present business activities and except as mentioned below, no further material approvals are required for carrying on our present business activities.

Our Company undertakes to obtain all material approvals and licenses and permissions required to operate our present business activities. Unless otherwise stated, these approvals or licenses are valid as of the date of this Draft Red Herring Prospectus and in case of licenses and approvals which have expired, we have either made an application for renewal or are in the process of making an application for renewal or we have sought a clarification from the relevant statutory and/ or regulatory authorities in relation to the applicability of the approval.

For details of risk associated with not obtaining or delay in the obtaining the requisite approvals, please refer risk factor number 16 titled "We require certain approvals, licenses, registrations and permits for conducting our business and our inability to obtain, retain or renew them in a timely manner, or at all, may adversely affect our business, results of operations and financial condition." on page no. 35 of this Draft Red Herring Prospectus.

For further details, in connection with the applicable regulatory and legal framework, please refer chapter titled "Key Regulations and Policies" beginning on page no. 183 of this Draft Red Herring Prospectus.

The main objects clause of the Memorandum of Association and objects incidental to the main objects enables our Company to undertake present business activities.

The Company has its business located at the following locations:

Sr. No.	Details of the Property	Purpose Used
1	Gat No-912, Khamaswadi, Kallam, Osmanabad, Maharashtra, 413507	Factory
2	Gat No-911, Khamaswadi, Kallam, Osmanabad, Maharashtra, 413507	Godown
3	Godown No. 01, Ground Floor, M. Pawar Wearhouse, Plot Number 01 & Block Number A-29, Main Road, Diksal MIDC, Diksal, Kalanb, Dharashiv 413507	Godown
4	Block Number 1 and 4, Floor No-1 and 2, Survey No 120, Plot No 4 & C.T.S. Number :5343, Sambhaji Nagar behind DIC, Osmanabad, Maharashtra, 413501	Registered Office
5	Office No. 302, 3rd Floor, Padmja Apartment, Survey Number :45+46/3, Tanna Tower, Above Styles SPA Furniture, Erandavana, Pune - 411004	Shop

I. Approvals for the Issue:

The following approvals have been obtained in connection with the issue:

Approval of the Company:

- Our Board of Directors have pursuant to a resolution passed at their meeting held on June 25, 2026, authorized the Issue, subject to the approval of the shareholders of our Company under Section 62(1)(c) of the Companies Act, 2013 and such other authorities as may be necessary.

- The Issue of Equity Shares has been authorized by a special resolution adopted pursuant to Section 62(1)(c) of the Companies Act, 2013 in an Extra Ordinary General Meeting held on June 26, 2026.

Approval of Stock Exchange:

- In-Principal approval dated [●] from NSE Emerge for the listing of equity shares issued by our Company pursuant to the Issue.

Approval from Depositories

- The Company's International Securities Identification Number ("ISIN") is INE1NVJ01026.
- The Company has entered into a tripartite agreement dated June 15, 2026, with the Central Depository Services (India) Limited (CDSL) and the Registrar and Transfer Agent, who in this case is Mas Services Limited.
- The Company has entered into an agreement dated June 02, 2026, with the National Securities Depository Limited (NSDL) and the Registrar and Transfer Agent, who in this case is Mas Services Limited.

Lender Consent

- Our Company has received the lender's consent letter from HDFC Bank Limited dated July 01, 2026.
- Our Company has received the lender's consent letter from Dombivli Nagari Sahakari Bank Limited dated July 01, 2026.

II. Approvals obtained by our Company

We have received the following significant government and other approvals pertaining to our business:

Sr. No.	Nature of License/ Approval Granted	Registration/ License No.	Issuing Authority	Date of Granting/ Renewal of License/ Approval	Validity
A.	**INCORPORATION RELATED APPROVALS**				
1.	Certificate of Incorporation of "Shree Siddhivinayak Greentech Industries Private Limited"	U15134MH2022PTC 385368	Registrar of Companies, Central Registration Centre	June 24, 2020	One Time Registration
2.	Certificate of Incorporation pursuant to Conversion of the Company from Private to Public i.e., "Shree Siddhivinayak Greentech Industries Private Limited" to "Shree Siddhivinayak Greentech Industries Limited"	U15134MH2022PLC 385368	Registrar of Companies, Central Processing Centre	March 27, 2026	One Time Registration
3.	Certificate of Registration of the Special Resolution Confirming Alteration of Object Clause(s)	U10720MH2022PLC 385368	Registrar of Companies, Central Processing Centre	July 02, 2026	One Time Registration
B.	**TAX RELATED APPROVALS**				
4.	Permanent Account Number ("PAN")	ABICS8178D	Income Tax Department, Government of India	June 24, 2022	One Time Registration
5.	*Tax Deduction and Collection Account Number ("TAN")	NSKS33036D	Income Tax Department, Government of India	June 25, 2022	One Time Registration
6.	Certificate of Registration under Goods and Services Tax Act, 2017	27ABICS8178D1ZX	Goods and Service Tax Department.	June 17, 2026	One Time Registration
7.	*Certificate of Registration under section 5(1) of the Maharashtra State Tax on Professions, Trades, Callings and Employments Act, 1975	27532014201P	Maharashtra Sales Tax Department	February 03, 2022	One Time Registration
8.	*Certificate of Enrolment under Section 5(2) of the Maharashtra State Tax on Professions, Trades, Callings and Employments Act, 1975	99834343176P	Maharashtra Sales Tax Department	July 05, 2022	One Time Registration
C.	**BUSINESS RELATED APPROVALS**				
9.	Factory License for Gat No-912, Khamaswadi, Kallam, Osmanabad, Maharashtra, 413507	12250107220088676	Directorate of Industrial Safety and Health, Mah arashtra	May 29, 2026	December 31, 2026
10.	Acknowledgement for filing of Industrial Entrepreneur Memorandum	931/N/SIA/IMO/2026	Ministry of Commerce & Industry, Department for Promotion of Industry and Internal Trade, Industrial Entrepreneurs Memorandum Section	June 01, 2026	Valid till cancelled

Sr. No.	Nature of License/ Approval Granted	Registration/ License No.	Issuing Authority	Date of Granting/ Renewal of License/ Approval	Validity
11.	*Licence for possession and sale of molasses under the Bombay Prohibition Act, 1949, and the rules, regulations at Gat No-912, Khamaswadi, Kallam, Osmanabad, Maharashtra, 413507	5255899/22	District Collector, Dharashiv	November 29, 2023	March 31, 2027
12.	*Licence for manufacture of Khandsari under the Maharashtra Khandsari Manufacturers Licensing Order, 1979	17	Licensing Authority and Commissioner of Sugar	November 07, 2025	Valid till declaration of date of closure of crushing season 2025-26 by Licensing Authority ^
13.	Certificate to operate Boiler under section 12 of Boilers Act 2025	SB.6/AMZ/2025/2009	Labour Department, Office of The Joint Director of Steam Boiler	September 16, 2025	March 14, 2026 ^
14.	*Certificate of Fire Safety Under Maharashtra Fire Prevention and Life Safety Measures Act, 2006 for Gat No-912, Khamaswadi, Kallam, Osmanabad, Maharashtra, 413507	MFS CASE/MIDC/Final / 696 /2025	Maharashtra Industrial Development Corporation	October 28, 2025	Valid till Cancelled
15.	No Objection Certificate for Ground Water Abstraction for project at Gat No-912, Khamaswadi, Kallam, Osmanabad, Maharashtra, 413507	NOC/IND/MH/2026/2050/R-1/1	Central Ground Water Authority, Department of Water Resources, Ministry of Jal Shakti	May 19, 2026	February 07, 2029
16.	*Certificate of Verification of weights and measures under the Legal Metrology Act, 2009 and the Maharashtra Legal Metrology (Enforcement) Rules, 2011	CLM26327022	Food, Civil Supply and Consumer Protection Department Legal Metrology Organisation Government of Maharashtra	November 21, 2025	November 20, 2026
17.	License for approval of plan for 500 KVA DG Set at Gat No-912, Khamaswadi, Kallam, Osmanabad, Maharashtra, 413507	0E/525000060220260018632	Electrical Inspector, Dharashiv Department of Industries, Energy Labour and Mining Government of Maharashtra	February 06, 2026	Valid till cancelled
18.	*Central License under Food Safety and Standards Authority of India under FSS Act, 2006	11523999000407	Food Safety and Standards Authority of India	May 07, 2026	October 02, 2029
19.	Udyam Registration Certificate under Micro, Small and Medium Enterprises Development Act, 2006	UDYAM-MH-24-0026632	Ministry of Micro, Small and Medium Enterprises, Government of India	April 30, 2026	Valid till Cancelled
20.	Legal Entity Identifier for "Shree Siddhivinayak Greentech Industries Limited"	335800AYVQ9EJ8NYMA22	Legal Entity Identifier India Limited	March 20, 2024	March 20, 2027
D.	**ENVIRONMENT RELATED APPROVALS**				
21.	Consent to Operate under Section 26 of the Water (Prevention & Control of Pollution) Act, 1974 & under Section 21 of the Air (Prevention & Control of Pollution) Act, 1981 and Authorization under Rule 6 and Rule 18(7) of the Hazardous & Other Wastes (Management & Transboundary Movement) Rules 2016	MPCB-CONSENT_AMMENDMENT-0000020514	Maharashtra Pollution Control Board	June 04, 2026	July 30, 2029
22.	#Consent to Establish under Section 25 of the Water (Prevention & Control of Pollution) Act, 1974 & under Section 21 of the Air (Prevention & Control of Pollution) Act, 1981 and Authorization under Rule 6 of the Hazardous & Other Wastes (Management & Transboundary Movement) Rules 2016 for manufacturing Jaggery Powder.	MPCB-CONSENT-0000150266	Maharashtra Pollution Control Board	February 07, 2023	Valid till commencement of unit

Sr. No.	Nature of License/ Approval Granted	Registration/ License No.	Issuing Authority	Date of Granting/ Renewal of License/ Approval	Validity
23.	#Consent to Establish under Section 25 of the Water (Prevention & Control of Pollution) Act, 1974 & under Section 21 of the Air (Prevention & Control of Pollution) Act, 1981 and Authorization under Rule 6 of the Hazardous & Other Wastes (Management & Transboundary Movement) Rules 2016 for manufacturing Khandsari Sugar .	MPCB-CONSENT-0000263514	Maharashtra Pollution Control Board	November 28, 2025	Valid till commencement of unit
C.	**LABOUR RELATED APPROVALS**				
24.	*Registration under Maharashtra Labour Welfare Board	DHDHAS000004	Welfare Commissioner Maharashtra Labour Welfare Board	January 07, 2025	Valid till cancelled
25.	*Registration under Employee State Insurance Act 1948	25000223060000099	Employees' State Insurance Corporation, Aurangabad, Maharashtra	June 25, 2022	One Time Registration
26.	Registration under Employee Provident Fund and Miscellaneous Act, 1952	PUSLP2692496000	Employees' Provident Fund Organisation	June 25, 2022	One Time Registration
27.	*Registration under Employee Provident Fund and Miscellaneous Act, 1952 for Internal Contractor	PUSLP3919788000	Employees' Provident Fund Organisation	April 03, 2026	One Time Registration
28.	Certificate of Registration under the Maharashtra Shops and Establishments (Regulation of Employment and Conditions of Service) Act, 2017 for office at Block Number 1 and 4, Floor No-1 and 2, Survey No 120, Plot No 4 & C.T.S. Number :5343, Sambhaji Nagar behind DIC, Dharashiv, Osmanabad, Maharashtra, 413501	2641800321227698	Office of the Government Labour Officer, Samata Nagar, Osmanabad	June 05, 2026	Valid till cancelled
29.	Acknowledgement of intimation under Form F of Maharashtra Shops and Establishments Regulation of Employment and Conditions of Service) Act, 2017 for Office No. 302, 3rd Floor, Padmja Apartment, Survey Number :45+46/3, Tanna Tower, Above Styles SPA Furniture, Erandavana, Pune - 411004	105698932603	Office of Deputy Commissioner of Labour, Pune	July 01, 2026	NA
30.	Acknowledgement of intimation under Form F of Maharashtra Shops and Establishments (Regulation of Employment and Conditions of Service) Act, 2017 for Gat No-911, Khamaswadi, Kallam, Osmanabad, Maharashtra, 413507	105593872603	Office of the Government Labour Officer, Osmanabad	June 29, 2026	NA
31.	Acknowledgement of intimation under Form F of Maharashtra Shops and Establishments (Regulation of Employment and Conditions of Service) Act, 2017 for Godown No. 01, Ground Floor, M. Pawar Wearhouse, Plot Number 01 & Block Number A-29, Main Road, Diksal MIDC, Diksal, Kalanb, Dharashiv 413507	105685592603	Office of the Government Labour Officer, Osmanabad	June 30, 2026	NA

**The said certifications are in the name of "Shree Siddhivinayak Greentech Industries Private Limited". The Company is in the process of getting the name changed from "Shree Siddhivinayak Greentech Industries Private Limited" to "Shree Siddhivinayak Greentech Industries Limited" for all the certification*

#Please note the said certificate is no more valid as unit started its operations.

^ the respective license is issued during the sugarcane crushing season. The Company shall apply for the respective license at appropriate time.

III. Approvals obtained/applied in relation to Intellectual Property Rights

Sr. No	Word/ Label Mark	Application No.	Class	Registration / Application Date	Status/ Validity
1.	*Shree Siddhivinayak Greentech 	7492990	29, 30, 31, 32, 35, 40 and 43	February 01, 2026	Formalities check pass
2.	*Shree Siddhivinayak Greentech	7492995	29 and 35	February 01, 2026,	Formalities check pass
3.	*Shree Siddhivinayak Greentech	7492996	30 and 40	February 01, 2026,	Formalities check pass
4.	*Shree Siddhivinayak Greentech	7492988	31, 32 and 43	February 01, 2026,	Formalities check pass
5.	*Shree Siddhivinayak	7492987	31, 32, 43	February 01, 2026	Formalities check pass
6.	*Shree Siddhivinayak 	7492989	31, 32, 43	February 01, 2026	Formalities check pass
7.	*Shree Siddhivinayak	7492991	29 and 35	February 01, 2026	Formalities chec k pass
8.	*Shree Siddhivinayak 	7492997	29 and 35	February 01, 2026	Formalities check pass
9.	*Shree Siddhivinayak	7492994	30 and 40	February 01, 2026	Formalities check pass
10.	*Shree Siddhivinayak 	7492998	30 and 40	February 01, 2026	Formalities check pass
11.	#Feel Guddy	6824194	For 29, 30, 31, 32 and 35	January 26, 2025	Objected
12.	#Feel Guddy	6824195	For 29, 30, 31, 32 and 35	January 26, 2025	Objected

	Feel Guddy				
13.	#Simply Sakhar	7442165	29, 30, 31, 32 and 35	January 06, 2026	Formalities check pass
14.	#Simply Sakhar Simply Sakhar	7442166	29, 30, 31, 32 and 35	January 06, 2026	Formalities check pass
**The said trademarks are in the name of "Shree Siddhivinayak Greentech Industries Private Limited". The Company is in the process of getting the name changed from "Shree Siddhivinayak Greentech Industries Private Limited" to "Shree Siddhivinayak Greentech Industries Limited" for all the certifications.* *#The said trademarks are in the name Mrs Dipali Dattatraya Kulkarni. The Company has executed assignment deed with respect to trademarks on January 05,2026 the said deed is valid for a period of 5 years from date of execution.*					

For the risk associated with the above kindly refer the risk factor number 17 on the page no. 36 of this Draft Red Herring Prospectus

IV. The details of domain name registered in the name of the company

Sr. No.	Domain Name and ID	IANA ID	Creation Date	Expiry Date
1.	**Domain Name:** shreesiddhivinayakgreentech.com **Domain Id:** 3055773159_DOMAIN_COM-VRSN	146	January 09, 2026	January 09, 2027
2.	**Domain Name:** feelguddy.com **Domain Id:** 2938958129_DOMAIN_COM-VRSN	146	December 02, 2024	December 02, 2026
3.	**Domain Name:** feelguddy.in **Domain Id**: D5A5A41F030694213A88371AD266F0432-IN	146	December 02, 2024	December 02, 2026
4.	**Domain Name:** Simplysakhar.in **Domain Id:** DO_ec4fa5401ce29267bb2943559d3531af-NIXI	146	January 02, 2026	January 02, 2027
5.	**Domain Name:** Simplysakhar.com **Domain Id:** 3053538465_DOMAIN_COM-VRSN	146	January 02, 2026	January 02, 2027
6.	**Domain Name:** greentechfoods.in **Domain Id:** DO_535534e8db7af9d24c2b6bda4a95ac64-NIXI	146	January 02, 2026	January 02, 2027
7.	**Domain Name:** greentechfoods.com **Domain Id:** 3053537008_DOMAIN_COM-VRSN	146	January 02, 2026	January 02, 2027
8.	**Domain Name:** ssvgreentech.com **Domain Id:** 2819422555_DOMAIN_COM-VRSN	146	October 05, 2023	October 05, 2026

V. Approvals or License pending to be applied:

1. Certificate to operate Boiler under section 12 of Boilers Act 2025 for the FY 2026-2027.

2. Licence for manufacture of Khandsari under the Maharashtra Khandsari Manufacturers Licensing Order, 1979 for the FY 2026-2027

VI. Approval or License applied but not received:

Nil

(The rest of the page is intentionally left blank)

OTHER REGULATORY AND STATUTORY DISCLOSURES

AUTHORITY FOR THE ISSUE

Corporate Approval:

The Fresh Issue of Equity Shares in terms of this Draft Red Herring Prospectus has been authorized by a resolution of the Board of Directors of our Company passed at their meeting held on June 25, 2026, pursuant to Section 62(1) (c) of the Companies Act, 2013.

The Fresh Issue of Equity Shares in terms of this Draft Red Herring Prospectus has been authorized by a special resolution of the shareholders of our Company passed at the Extraordinary General Meeting held on June 26, 2026, pursuant to Section 62(1)(c) and other applicable provisions of the Companies Act, 2013.

Our Board has approved the Draft Red Herring Prospectus through its resolution dated July 10, 2026. Our Board has approved the Red Herring Prospectus through its resolution dated [●].

Government and other Approvals

Our Company has also obtained all necessary approvals required for the Issue. *For further details, refer to the chapter titled "Government and Other Approvals" beginning on page no. 293 of this Draft Red Herring Prospectus.*

In-Principle Listing Approval

Our Company has received In-principal approval from the National Stock Exchange vide their letter dated [●] to use the name of NSE in the Red Herring Prospectus for listing of the Equity Shares on SME Platform of NSE i.e. NSE Emerge. National Stock Exchange Limited is the Designated Stock Exchange for this Issue.

PROHIBITION BY SEBI OR ANY OTHER GOVERNMENTAL AUTHORITY

Our Company, our Promoter, Promoter Group and Directors of our Company are not prohibited from accessing the capital market or debarred from buying, selling, or dealing in securities under any order or direction passed by the SEBI or any securities market regulator in any other jurisdiction or any other authority/court.

COMPLIANCE WITH THE COMPANIES (SIGNIFICANT BENEFICIAL OWNERSHIP) RULES, 2018

Our Company, our Promoter and our Promoter Group are in compliance with the Companies (Significant Beneficial Ownership) Rules, 2018 ("SBO Rules"), to the extent applicable to our Company, as on the date of this Draft Red Herring Prospectus.

ASSOCIATION WITH CAPITAL MARKET

None of our Directors are in any manner associated with the securities market and there has been no action taken by the SEBI against the Directors or any other entity with which our Directors are associated as Promoter or directors in the past five years.

None of the Directors are associated with any entities which are engaged in securities market related business and are registered with SEBI for the same.

ELIGIBILITY FOR THE ISSUE

Our Company is eligible for this issue in terms of Chapter IX of the SEBI (ICDR) Regulations.

Our Company is an 'Unlisted Issuer' in terms of SEBI (ICDR) Regulations, 2018 and this Issue is an 'Initial Public Issue' in terms of these regulations.

We confirm that:

- In accordance with Regulation 228(a) of the SEBI (ICDR) Regulations, our Company, our Promoter, Promoter Group and Directors of our Company are not debarred from accessing the capital market by the SEBI.

- In accordance with Regulation 228(b) of the SEBI (ICDR) Regulations, no company in which our Promoters or Directors is a promoter or a director is debarred from accessing the capital market by SEBI.

- In accordance with Regulation 228(c) of the SEBI (ICDR) Regulations, neither our Company nor our Promoters or our Directors are identified as wilful defaulter or fraudulent borrower by the RBI or any other governmental authority as defined by SEBI ICDR Regulations, 2018.

- In accordance with Regulation 228(d) of the SEBI (ICDR) Regulations, none of our Promoters or our Directors are Fugitive Economic Offenders under Section 12 of the Fugitive Economic Offenders Act, 2018.

- In accordance with Regulation 228(e) of the SEBI (ICDR) Regulations, there are no outstanding convertible securities or any other right which would entitle any person with an option to receive equity shares of our Company.

- In accordance with Regulation 229(2) of the SEBI (ICDR) Regulations, our Company is eligible for this Issue, as we are an issuer whose post issue capital is more than Ten Crores Rupees and up to Twenty-Five Crores Rupees, and we may hence issue Equity shares to public and propose to list the same on SME Platform of Stock Exchange, in this case being the SME platform of NSE i.e. NSE Emerge.

- In accordance with Regulation 229(4) of the SEBI (ICDR) Regulations, in case of an issuer, which had been a proprietorship or a partnership firm or a limited liability partnership before conversion to a company or body corporate, such issuer may make an initial public offer only if the issuer company has been in existence for at least one full financial year before filing of draft issue document. **Not Applicable**

- In accordance with Regulation 229(5) of the SEBI (ICDR) Regulations, there has been no change in the promoters of our Company since its incorporation.

- In accordance with Regulation 229(6) of the SEBI (ICDR) Regulations, our Company has had a minimum operating profits (earnings before interest, depreciation and tax) of ₹100 lakhs from operations for at least two out of the three previous financial years. The details of the same is provided herein below:

  For the above details relating to EBITDA, we have relied upon the certificate dated July 10, 2026, issued by the Statutory Auditors of our Company i.e., M/s. A N Gawade & Co. LLP Chartered Accountants.

- In accordance with Regulation 230(1)(a) of the SEBI (ICDR) Regulations, application is being made to SME Platform of NSE and National Stock Exchange of India Limited is the Designated Stock Exchange.

- In accordance with Regulation 230(1)(b) of the SEBI (ICDR) Regulations, our Company has entered into an agreement with depositories for dematerialization of specified securities already issued and proposed to be issued.

- In accordance with Regulation 230(1)(c) of the SEBI (ICDR) Regulations, all the present Equity share Capital is fully paid-up.

- In accordance with Regulation 230(1)(d) of the SEBI (ICDR) Regulations, all the specified securities if any, held by the Promoters, Promoter Group, Directors, Key Managerial Personnel, Senior Management Personnel and Employee(s) are already in dematerialized form. In this regard, we further confirm that 100% of the pre-IPO paid up share capital of our Company is in dematerialized form.

- In accordance with Regulation 230(1)(e) of the SEBI (ICDR) Regulations, the Issuer has made firm arrangements of finance through verifiable means towards seventy five per cent. of the stated means of finance for the project proposed to be funded from the issue proceeds, excluding the amount to be raised through the proposed public issue or through existing identifiable internal accruals. **Not applicable**

  For details, please refer the chapter "Objects of the Issue" beginning on page no. 95 of this Draft Red Herring Prospectus.

- In accordance with Regulation 230(1)(f) of the SEBI (ICDR) Regulations, the size of offer for sale by selling shareholders does not exceed twenty per cent of the total issue size. **Not Applicable**

- In accordance with Regulation 230(1)(g) of the SEBI (ICDR) Regulations, the shares being offered for sale by selling shareholders do not exceed fifty per cent of shareholders' pre-issue shareholding on a fully diluted basis. **Not Applicable**

- In accordance with Regulation 230(1)(h) of the SEBI (ICDR) Regulations, the objects of the issue do not consist of repayment of loan taken from promoter, promoter group or any related party, from the Issue proceeds, directly or indirectly.

For details, please refer the chapter "Objects of the Issue" beginning on page no. 95 of this Draft Red Herring Prospectus.

We further confirm that we shall be complying with all the other requirements as laid down for such an issue under Chapter IX of SEBI (ICDR) Regulations, as amended from time to time and subsequent circulars and guidelines issued by SEBI and the Stock Exchange.

NSE EMERGE ELIGIBILITY NORMS

In terms of Regulation 229(3) of the SEBI (ICDR) Regulations, we confirm that we have fulfilled eligibility criteria of NSE Emerge, the details of which are provided as under:

1. Incorporation

Our Company is a company incorporated under the Companies Act, 2013 in India.

Our Company was originally incorporated as "Shree Siddhivinayak Greentech Industries Private Limited", a Private Limited Company under the provisions of the Companies Act, 2013, vide Certificate of Incorporation dated June 25, 2022, issued by the Registrar of Companies, Central Processing Centre.

Subsequently, our Company was converted from a Private Limited Company to a Public Limited Company pursuant to a special resolution passed by the shareholders at the Extraordinary General Meeting held on January 30, 2026. The name of our Company was consequently changed to "Shree Siddhivinayak Greentech Industries Limited", and a fresh Certificate of Incorporation was issued by the Registrar of Companies, Central Processing Centre, on March 27, 2026.

2. Post Issue Paid-up Share Capital:

The post issue paid up share capital of our Company will be ₹1,884.60/- Lakhs.

3. Track Record

Our Company was incorporated on June 24, 2022, and hence, our Company has track record of more than 3 years as on the date of this Draft Red Herring Prospectus.

(The rest of the page is intentionally left blank)

4. Financial

a. Operating Profit (earnings before interest, depreciation and tax)

Our Company has reported an operating profit (earnings before interest, depreciation, and tax) of ₹100.00 Lakhs from operations in two out of the three Financial Years preceding the application date:

(₹ in Lakhs)

Particulars	FY 2025-2026	FY 2024-2025	FY 2023-2024
Profit before tax	1,587.04	768.04	363.24
Add: Depreciation and amortization	175.33	158.97	147.79
Add: Interest	588.71	783.44	413.08
Less: Other Income	304.86	256.16	62.81
Operating Profit	**2,046.22**	**1,454.29**	**861.30**

For the above details relating to Operating profit (earnings before interest, depreciation, and tax) from operations, we have relied upon the certificate dated July 10, 2026, issued by the Statutory Auditors of our Company i.e., M/s. A N Gawade & Co. LLP, Chartered Accountants

b. Net worth

Our Company has a positive net worth* of ₹ 2,507.01/- Lakhs as on March 31, 2026.

For the details relating to net worth, we have relied upon the certificate dated July 10, 2026, issued by the Statutory Auditors of our Company i.e., M/s. A N Gawade & Co. LLP Chartered Accountants

*The calculation of Net Worth is as per definition given in SEBI (ICDR) Regulations.

c. Positive Free Cash Flow to Equity (FCFE)

Our Company has a positive Free cash flow to Equity (FCFE)* in the two out of three financial years preceding the application date:

(₹ in Lakhs)

Particulars	FY 2025-2026	FY 2024-2025	FY 2023-2024
Cash flow from operations	504.19	1,324.17	(1,778.64)
Less: Purchase of Fixed Assets	1,110.74	435.49	1,402.74
Add: Proceeds from issuance of capital	-	-	980.00
Add: Net borrowings	1,719.79	(369.68)	3,168.13
Less: Interest (1-t)	430.01	560.68	350.41
Free cash flow to Equity	**683.23**	**(41.68)**	**616.34**

For the above details relating to Free cash flow to Equity (FCFE), we have relied upon the certificate dated July 10, 2026, issued by the Statutory Auditors of our Company i.e., M/s. A N Gawade & Co. LLP, Chartered Accountants

*The calculation of Free cash flow to Equity (FCFE) is as per definition given in by National Stock Exchange of India Limited vide its circular no. NSE/SME/ 73818 dated April 20, 2026.

5. Offer for Sale

Offer for sale (OFS) by selling shareholders in SME IPO does not exceed 20% of the total issue size and selling shareholders cannot sell more than 50% of their holding. ***Not applicable***

6. Other Listing Conditions

a. Our Company has neither been referred to erstwhile Board for Industrial and Financial Reconstruction (BIFR) nor any proceedings have been admitted under Insolvency and Bankruptcy Code against our Company. Further, we confirm that our Company does not have any promoting company.

b. Our Company has not received any winding up petition admitted by an NCLT / Court.

c. There has been no material regulatory or disciplinary action by a stock exchange or regulatory authority in the past three years against our Company.

d. Our Company and the BRLM confirm that the merchant bankers involved in the IPO does not have instances of any of their IPO draft issue document filed with the NSE being returned in the past 6 months preceding the date of this Draft Red Herring Prospectus.

e. The objects of the Issue stated in the *chapter "Objects of the Issue" beginning on page no. 95 of this Draft Red Herring Prospectus* do not, directly or indirectly, consist of any repayment of loan from Promoter, Promoter Group or any related party.

f. There has been no material regulatory or disciplinary action by a stock exchange or regulatory authority in the past one year in respect of Promoters, Group Companies and companies promoted by the Promoters. Further, we confirm that our Company does not have any promoting company.

g. There have been no defaults in respect of payment of interest and/or principal to the debenture/bond/fixed deposit holders, banks, financial institutions by our Company, Promoters, Group Companies, companies promoted by the Promoters during the past three years. Further, we confirm that our Company does not have any promoting company.

h. Disclosures relating to litigation(s) involving our Company, Promoters, Group Companies, companies promoted by the Promoters are made in the *chapter titled "Outstanding Litigation and Material* Developments*" beginning on page no. 283 of this Draft Red Herring Prospectus*. Further, we confirm that our Company does not have any promoting company.

i. There have been no criminal cases filed or investigation undertaken against our Directors with regard to alleged commission of any offence, where Directors of our Company have or has been charge-sheeted with serious crimes like murder, rape, forgery, economic offences. Further declaration to this effect has been disclosed in the *chapter titled "Outstanding Litigation and Material Developments" beginning on page no. 283 of this Draft Red Herring Prospectus*.

j. Our Company has a live and operational website i.e. www.shreesiddhivinayakgreentech.com.

OTHER CONDITIONS

- In terms of Regulation 246(5) of the SEBI (ICDR) Regulations, we shall ensure that our Book Running Lead Manager submits a copy of the Red Herring Prospectus along with a Due Diligence Certificate including additional confirmations as required to SEBI at the time of filing the Red Herring Prospectus with Stock Exchange and the Registrar of Companies. Further, in terms of Regulation 246(2), SEBI shall not issue observation on the Red Herring Prospectus.

- In accordance with Regulation 260 of the SEBI (ICDR) Regulations, we confirm that the proposed issue shall be 100% underwritten and that the Book Running Lead Manager to the Issue shall underwrite a minimum 15% of the Total Issue Size. *For further details pertaining to said underwriting please refer the head titled "Underwriting Agreement" under the chapter titled "General Information" on page no. 76 of this Draft Red Herring Prospectus.*

- In accordance with Regulation 261(1) of the SEBI (ICDR) Regulations, we hereby confirm that we will enter into an agreement with the Book Running Lead Manager and with Market Maker to ensure compulsory Market Making for a minimum period of three (3) years from the date of listing of Equity Shares on the SME Platform of National Stock Exchange of India Limited (NSE Emerge). *For further details of the arrangement of market making please refer heading titled "Details of Market Making Arrangement for this Issue" under the chapter titled "General Information" on page no. 77 of this Draft Red Herring Prospectus.*

- In accordance with Regulation 268 of the SEBI (ICDR) Regulations, we shall ensure that the total number of proposed allottees in the Issue shall be greater than or equal to two hundred (200), otherwise, the entire application money will be unblocked forthwith. If such money is not repaid within specified time from the date our Company becomes liable to repay it, then our Company and every officer in default shall, on and from expiry of timeline, be liable to repay such application money, with interest at the rate 15% per annum.

DISCLAIMER CLAUSE OF SEBI

IT IS TO BE DISTINCTLY UNDERSTOOD THAT SUBMISSION OF THE DRAFT ISSUE DOCUMENT/ ISSUE DOCUMENT TO THE SECURITIES AND EXCHANGE BOARD OF INDIA (SEBI) SHOULD NOT IN ANY WAY BE DEEMED OR CONSTRUED THAT THE SAME HAS BEEN CLEARED OR APPROVED BY SEBI. SEBI DOES NOT TAKE ANY RESPONSIBILITY EITHER FOR THE FINANCIAL SOUNDNESS OF ANY SCHEME OR THE PROJECT FOR WHICH THE ISSUE IS PROPOSED TO BE MADE OR FOR THE CORRECTNESS OF THE STATEMENTS MADE OR OPINIONS EXPRESSED IN THE DRAFT ISSUE DOCUMENT/ ISSUE DOCUMENT. THE BOOK RUNNING LEAD MANAGER HAS CERTIFIED THAT THE DISCLOSURES MADE IN THE DRAFT OFFER DOCUMENT/ OFFER DOCUMENT ARE GENERALLY ADEQUATE AND ARE IN CONFORMITY WITH THE REGULATIONS. THIS REQUIREMENT IS TO FACILITATE INVESTORS TO TAKE AN INFORMED DECISION FOR MAKING INVESTMENT IN THE PROPOSED ISSUE.

IT SHOULD ALSO BE CLEARLY UNDERSTOOD THAT WHILE THE ISSUER IS PRIMARILY RESPONSIBLE FOR THE CORRECTNESS, ADEQUACY AND DISCLOSURE OF ALL RELEVANT INFORMATION IN THE DRAFT ISSUE DOCUMENT/ ISSUE DOCUMENT, THE BOOK RUNNING LEAD MANAGER IS EXPECTED TO EXERCISE DUE DILIGENCE TO ENSURE THAT THE ISSUER DISCHARGES ITS RESPONSIBILITY ADEQUATELY IN THIS BEHALF AND TOWARDS THIS PURPOSE. THE BOOK RUNNING LEAD MANAGER, ERUDORE CAPITAL PRIVATE LIMITED, HAS FURNISHED TO SEBI AND STOCK EXCHANGE A DUE DILIGENCE CERTIFICATE DATED JULY 10, 2026, IN THE FORMAT PRESCRIBED UNDER SCHEDULE V(A) OF THE SEBI (ISSUE OF CAPITAL AND DISCLOSURE REQUIREMENTS) REGULATIONS, 2018.

THE FILING OF THIS DRAFT ISSUE DOCUMENT/ ISSUE DOCUMENT DOES NOT, HOWEVER, ABSOLVE THE ISSUER FROM ANY LIABILITIES UNDER THE COMPANIES ACT, 2013 OR FROM THE REQUIREMENT OF OBTAINING SUCH STATUTORY OR OTHER CLEARANCES AS MAY BE REQUIRED FOR THE PURPOSE OF THE PROPOSED ISSUE. SEBI FURTHER RESERVES THE RIGHT TO TAKE UP, AT ANY POINT OF TIME, WITH THE BOOK RUNNING LEAD MANAGER ANY IRREGULARITIES OR LAPSES IN THE DRAFT ISSUE DOCUMENT/ ISSUE DOCUMENT.

DISCLAIMER FROM OUR COMPANY AND THE BOOK RUNNING LEAD MANAGER

Our Company and the Book Running Lead Manager accept no responsibility for statements made otherwise than those contained in the Draft Issue Document / Issue Document or in the advertisements or any other material issued by or at the instance of our Company and that anyone placing reliance on any other source of information would be doing so at his or her own risk.

CAUTION

The Book Running Lead Manager accepts no responsibility, save as to the limited extent as provided in the Issue Agreement entered between our Company and the Book Running Lead Manager i.e. Erudore Capital Private Limited on July 10, 2026, and the Underwriting Agreement dated [●] entered into between our Company and the Underwriters and the Market Making Agreement dated [●] entered into among the Market Maker, Book Running Lead Manager, and our Company.

All information shall be made available by our Company and the Book Running Lead Manager to the public and investors at large and no selective or additional information would be available for a section of the investors in any manner whatsoever including at road show presentations, in research or sales reports, at collection centers or elsewhere.

The Book Running Lead Manager and their respective associates and affiliates may engage in transactions with, and perform services for, our Company, its Promoter Group, or its affiliates or associates in the ordinary course of business and have engaged, or may be engaged in the future, in commercial banking and investment banking transactions with our Company, its Promoter Group, Group Entities, and its affiliates or associates, for which they have received and may in future receive compensation.

Note: Investors who apply in the Issue will be required to confirm and will be deemed to have represented to our Company and the Underwriters and their respective directors, officers, agents, affiliates and representatives that they are eligible under all applicable laws, rules, regulations, guidelines and approvals to acquire Equity Shares of our Company and will not issue, sell, pledge or transfer the Equity Shares of our Company to any person who is not eligible under applicable laws, rules, regulations, guidelines and approvals to acquire Equity Shares of our Company. Our Company, the Underwriters and their respective directors, officers, agents, affiliates, and representatives accept no responsibility or liability for advising any investor on whether such an investor is eligible to acquire the Equity Shares in the Issue.

DISCLAIMER IN RESPECT OF JURISDICTION

This Issue is being made in India to persons resident in India, including Indian nationals resident in India who are majors, HUFs, companies, corporate bodies and societies registered under applicable laws in India and authorized to invest in shares, Indian mutual funds registered with SEBI, Indian financial institutions, commercial banks, regional rural banks, cooperative banks (subject to RBI permission), or trusts under applicable trust law and who are authorized under their constitution to hold and invest in shares, public financial institutions as specified in Section 2(72) of the Companies Act, 2013, VCFs, state industrial development corporations, insurance companies registered with the Insurance Regulatory and Development Authority, provident funds (subject to applicable law) and pension funds, and permitted non-residents including FIIs, Eligible NRIs, multilateral and bilateral development financial institutions, FVCIs and eligible foreign investors, insurance funds set up and managed by army, navy or air force of the Union of India and insurance funds set up and managed by the Department of Posts, India, provided that they are eligible under all applicable laws and regulations to hold Equity Shares of the Company. This Draft Red Herring Prospectus does not, however, constitute an Issue to sell or an invitation to subscribe for Equity Shares issued hereby in any jurisdiction other than India to any person to whom it is unlawful to make an issue or invitation in such jurisdiction. Any person into whose possession this Draft Red Herring Prospectus comes is required to inform himself or herself about, and to observe, any such restrictions.

Any dispute arising out of this Issue will be subject to jurisdiction of the competent court(s) in Mumbai, India only.

No action has been, or will be, taken to permit a public issuing in any jurisdiction where action would be required for that purpose. Accordingly, the Equity Shares represented hereby may not be issued or sold, directly or indirectly, and this Draft Red Herring Prospectus may not be distributed in any jurisdiction, except in accordance with the legal requirements applicable in such jurisdiction. Neither the delivery of this Draft Red Herring Prospectus nor any sale hereunder shall, under any circumstances, create any implication that there has been no change in the affairs of our Company from the date hereof or that the information contained herein is correct as of any time subsequent to this date.

DISCLAIMER CLAUSE OF THE STOCK EXCHANGE (NSE EMERGE)

As required, a copy of this Issue Document has been submitted to National Stock Exchange of India Limited (hereinafter referred to as NSE). NSE has given vide its letter Ref.: [●] dated [●] permission to the Issuer to use the Exchange's name in this Issue Document as one of the Stock Exchanges on which this Issuer's securities are proposed to be listed. The Exchange has scrutinized this draft Issue document for its limited internal purpose of deciding on the matter of granting the aforesaid permission to this Issuer. It is to be distinctly understood that the aforesaid permission given by NSE should not in any way be deemed or construed that the Issue document has been cleared or approved by NSE; nor does it in any manner warrant, certify or endorse the correctness or completeness of any of the contents of this Issue document; nor does it warrant that this Issuer's securities will be listed or will continue to be listed on the Exchange; nor does it take any responsibility for the financial or other soundness of this Issuer, its promoters, its management or any scheme or project of this Issuer.

Every person who desires to apply for or otherwise acquire any securities of this Issuer may do so pursuant to independent inquiry, investigation and analysis and shall not have any claim against the Exchange whatsoever by reason of any loss which may be suffered by such person consequent to or in connection with such subscription /acquisition whether by reason of anything stated or omitted to be stated herein or any other reason whatsoever.

DISCLAIMER CLAUSE UNDER RULE 144A OF THE U.S. SECURITIES ACT, 1933

The Equity Shares have not been, and will not be, registered under the U.S. Securities Act. 1933, as amended (the "Securities Act") or any state securities laws in the United States and may not be issued or sold within the United States or to, or for the account or benefit of, "U.S. persons" (as defined in Regulation S under the Securities Act), except pursuant to an exemption from, or in a transaction not subject to, the registration requirements of the Securities Act. Accordingly, the Equity Shares will be issued and sold outside the United States in compliance with Regulations of the Securities Act and the applicable laws of the jurisdiction where those issues and sales occur. The Equity Shares have not been, and will not be, registered, listed, or otherwise qualified in any other jurisdiction outside India and may not be issued or sold, and Applicants may not be made by persons in any such jurisdiction, except in compliance with the applicable laws of such jurisdiction.

Further, each Applicant where required agrees that such Applicant will not sell or transfer any Equity Shares or create any economic interest therein, including any off-shore derivative instruments, such as participatory notes, issued against the Equity Shares or any similar security, other than pursuant to an exemption from, or in a transaction not subject to, the registration requirements of the Securities Act and in compliance with applicable laws and legislations in each jurisdiction, including India.

FILING

The Issue Document will not be filed with SEBI, nor will SEBI issue any observation on the Issue Document in terms of Regulation 246(2) of SEBI (ICDR) Regulations. However, pursuant to Regulation 246(5) of the SEBI (ICDR) Regulations, the copy of the Issue Document shall be furnished to the Board (SEBI) in soft form.

Pursuant to SEBI Circular No. SEBI/HO/CFD/DIL1/CIR/P/2018/011 dated January 19, 2018, a copy of the Red Herring Prospectus will be filed online through SEBI Intermediary Portal at https://siportal.sebi.gov.in.

A copy of the Red Herring Prospectus along with the documents required to be filed under Section 26 of the Companies Act, 2013 will be filed online with the Registrar of Companies, Nagpur, situated at Registrar of Companies, New Secretariat Building, 2nd Floor, East Wing, Civil Lines, Nagpur – 440001, at least (3) three working days prior from the date of opening of the Issue.

LISTING

Application will be made to the National Stock Exchange of India Limited to obtain permission to list the securities of our Company on the NSE Emerge platform.

The National Stock Exchange of India Limited is the Designated Stock Exchange, with which the Basis of Allotment will be finalized. The National Stock Exchange of India Limited has given its in-principal approval for using its name in our Issue Documents vide its letter [●].

If the permissions to deal in and for an official quotation of our Equity Shares are not granted by the NSE, our Company will forthwith repay, without interest, all moneys received from the Applicants in pursuance of the Draft Red Herring Prospectus/ Red Herring Prospectus. If such money is not repaid within 4 days after our Company becomes liable to repay it (i.e. from the date of refusal or within 15 working days from the Bid/ Issue Closing Date), then our Company and every Director of our Company who is an officer in default shall, on and from such expiry of such days as may be prescribed, be liable to repay the money, with interest at the rate of 15 per cent per annum on application money, as prescribed under Section 40 of the Companies Act, 2013.

Our Company shall ensure that all steps for the completion of the necessary formalities for listing and commencement of trading at the NSE Emerge mentioned above are taken within three (3) Working Days from the Bid/ Issue Closing Date.

IMPERSONATION

Attention of the Applicants is specifically drawn to the provisions of sub-section (1) of Section 38 of the Companies Act, 2013 which is reproduced below:

Any person who:

a. Makes or abets making of an application in a fictitious name to a company for acquiring, or subscribing for, its securities; or

b. Makes or abets making of multiple applications to a company in different names or in different combinations of his name or surname for acquiring or subscribing for its securities; or

c. Otherwise induces directly or indirectly a company to allot, or register any transfer of, securities to him, or to any other person in a fictitious name,

shall be liable to action under Section 447 of the Companies, Act 2013.

CONSENTS

Consents in writing of the (a) Directors, Promoters, Company Secretary & Compliance Officer, Chief Financial Officer, Senior Managerial Personnel, (b) Book Running Lead Manager, Registrar to the Issue, Statutory Auditor cum Peer Review Auditor, Experts, Legal Advisor to the Issue, Banker to the Company, Banker to the Issue*, Underwriter(s) to the Issue*, Market Maker to the Issue* and Syndicate Member* to include their names in the Draft Red Herring Prospectus to act in their respective capacities, as required under Section 26 of the Companies Act, 2013 have been obtained and shall be filed along with a copy of the Red Herring Prospectus with the RoC, as required under Sections 32 of the Companies Act, 2013 and such consents will not be withdrawn up to the time of listing of shares offered through this Issue.

**to be obtained prior to filing the Red Herring Prospectus.*

EXPERTS OPINION

Except as disclosed below, our Company has not obtained any expert opinions in connection with this Draft Red Herring Prospectus. However, the term "expert" shall not be construed to mean an "expert" as defined under the U.S. Securities Act 1933.

Except as disclosed below, our Company has not obtained any expert opinions in connection with this Draft Red Herring Prospectus. However, the term "expert" shall not be construed to mean an "expert"" as defined under the U.S. Securities Act 1933.

Our Company has received written consent dated July 10, 2026 from A N Gawade & Co. LLP, Chartered Accountants, to include their name as required under Section 26 (1) of the Companies Act, 2013 read with SEBI ICDR Regulations, in this Draft Red Herring Prospectus, and as an "expert" as defined under Section 2(38) of the Companies Act, 2013 to the extent and in their capacity as our Statutory Auditors, and in respect of their (i) Examination Report dated June 30, 2026 on our Restated Financial Statements and the Restated Financial Statements for FY 2025-2026, FY 2024-2025 and FY 2023-2024, which are prepared in accordance with the SEBI ICDR Regulations, the Companies Act, 2013 and the Guidance Note on Reports in Company Prospectus (Revised 2019) issued by the Institute of Chartered Accountants of India; (ii) Report dated July 10, 2026 on the Statement of Special Tax Benefits in accordance with the requirements of the SEBI ICDR Regulations; (iii) Certificate of Key Performance Indicators dated July 10, 2026; and (iv) Various other certificates issued for the purpose of Issue Documents.

Our Company has received written consent dated July 10, 2026 from Infomerics Analytics & Research Pvt Ltd, to include their name as required under Section 26 (1) of the Companies Act, 2013 read with SEBI ICDR Regulations, in this Draft Red herring Prospectus, and as an "expert" as defined under Section 2(38) of the Companies Act, 2013 in their capacity as an Industry Report Provider, in respect of their Industry Report dated July 10, 2026 on 'Processed Food Industry w.r.t Jaggery, Khandsari & Instant Premix', and such consent has not been withdrawn as on the date of this Draft Red Herring Prospectus. *The above mentioned Industry report is available on the website of our Company at www.shreesiddhivinayakgreentech.com*

Our Company has received written consent dated July 08, 2026 from Ajay P. Kothari, to include their name as required under Section 26 (1) of the Companies Act, 2013 read with SEBI ICDR Regulations, in this Draft Red Herring Prospectus, and as an "expert" as defined under Section 2(38) of the Companies Act, 2013 in their capacity as a Chartered Engineer, in respect of their Chartered Engineer's Certificate dated July 08, 2026, and such consent has not been withdrawn as on the date of this Draft Red Herring Prospectus.

Our Company has received written consent dated July 10, 2026 from M.V. Kini, Law Firm, to include their name as required under Section 26 (1) of the Companies Act, 2013 read with SEBI ICDR Regulations, in this Draft Red Herring Prospectus, and as an "expert" as defined under Section 2(38) of the Companies Act, 2013 in their capacity as a Legal Advisor to the Issue, in respect of Chapter title 'Government and Other approvals', Key Regulations and Policies in India' and 'Outstanding Litigations and Material Developments', and such consent has not been withdrawn as on the date of this Draft Red Herring Prospectus.

PARTICULARS REGARDING PUBLIC OR RIGHTS ISSUES DURING THE LAST FIVE (5) YEARS

Except as stated under *chapter titled "Capital Structure" beginning on page 78 of this Draft Red Herring Prospectus*, our Company has not undertaken any previous public or rights issue. Further, we are an "Unlisted Issuer" in terms of the SEBI (ICDR) Regulations, amended from time to time and the Issue is an "Initial Public Issue" in terms of the SEBI (ICDR) Regulations.

UNDERWRITING COMMISSION, BROKERAGE AND SELLING COMMISSION ON PREVIOUS ISSUES IN LAST 5 YEARS

Since this is the Initial Public Offer of our Company's Equity Shares, no sum has been paid as commission or brokerage for subscribing to or procuring or agreeing to procure subscription for any of the Equity Shares since the incorporation.

PARTICULARS IN REGARD TO THE COMPANY AND OTHER LISTED GROUP COMPANIES / SUBSIDIARIES/ ASSOCIATES UNDER THE SAME MANAGEMENT WITHIN THE MEANING OF SECTION 186 OF THE COMPANIES ACT, 2013 WHICH MADE ANY CAPITAL ISSUE DURING THE LAST THREE YEARS

Neither our Company nor any other companies under the same management within the meaning of Section 186 of the Companies Act, 2013, had made any public issue during the last three years except as mentioned in this Draft Red Herring Prospectus. This is the Initial Public Offer of our Company's Equity Shares.

PERFORMANCE VIS-A-VIS OBJECTS–PUBLIC/RIGHT ISSUE OF THE COMPANY

Except as stated under *chapter titled "Capital Structure" beginning on page 78 of this Draft Red Herring Prospectus*, our Company has not undertaken any previous public/rights issue.

PERFORMANCE VIS-A-VIS OBJECTS - LAST ISSUE OF LISTED SUBSIDIARIES/ LISTED PROMOTER

We do not have any listed subsidiaries or any listed Promoter as on date of this Draft Red Herring Prospectus.

STOCK MARKET DATA OF THE EQUITY SHARES

Since the Equity Shares of our Company are not listed on any Stock Exchange, this will be an Initial Public Offer for our Company.

MECHANISM FOR REDRESSAL OF INVESTOR GRIEVANCES

Our Company has appointed "Mas Services Limited" as the Registrar to the Issue, to handle the investor grievances in co-ordination with the Compliance Officer of our Company.

The Agreement dated July 02, 2026 between the Registrar to the Issue and our Company provides for retention of records with the Registrar to the Issue for a period of at least three (3) year from the date of listing and commencement of trading of the Equity Shares, subject to agreement with our Company, to enable the investors to approach the Registrar to the Issue for redressal of their grievances.

All grievances relating to the ASBA process may be addressed to the SCSBs, giving full details such as name, address of the applicant, number of Equity Shares applied for, amount paid on application and the relevant Designated Branch or the collection center of the SCSBs where the Application Form was submitted by the ASBA Applicants in ASBA account or UPI ID linked bank account number in which the amount equivalent to the Bid Amount was blocked. Further, the investor shall also enclose the Acknowledgment Slip from the Designated Intermediaries in addition to the documents/information mentioned hereinabove.

The Applicant should give full details such as name of the sole/first Applicant, Application Form number, Applicant DP ID, Client ID, Bank Account No./UPI ID, PAN, date of the Application Form, address of the Applicant, number of the Equity Shares applied for and the name and address of the Designated Intermediary where the Application Form was submitted by the Applicant. Further, the investor shall also enclose the Acknowledgement Slip from the Designated Intermediaries in addition to the documents or information mentioned hereinabove.

DISPOSAL OF INVESTOR GRIEVANCES BY THE COMPANY

Our Company estimates that the average time required by our Company or the Registrar to the Issue for the redressal of routine investor grievances shall be fifteen (15) Working Days from the date of receipt of the complaint. In case of complaints that are not routine or where external agencies are involved, our Company will seek to redress these complaints as expeditiously as possible.

Our Company has appointed Pearl Santosh Dsouza, Company Secretary, as the Compliance Officer to redress complaints, if any, of the investors participating in the Issue. Contact details for the Company Secretary and the Compliance Officer are as follows:

Pearl Santosh Dsouza
Company Secretary & Compliance Officer
Shree Siddhivinayak Greentech Industries Limited
Address: Block Number 1 and 4 Floor No-1 and 2 Survey No 120, Plot No 4 & C.T.S. Number-5343 Sambhaji Nagar Behind DIC, Osmanabad, Maharashtra, India,413501
Tel No: +91 86695 22424
Email: investorgrievances@shreesiddhivinayakgreentech.com
Website: www.shreesiddhivinayakgreentech.com

Investors can contact the Compliance Officer or the Registrar in case of any pre-issue or post-issue related problems such as non-receipt of letters of allocation, credit of allotted Equity Shares in the respective beneficiary account etc.

Pursuant to press release no. PR. No. 85/2011 dated June 8, 2011, SEBI has launched a centralized web-based complaints redress system "SCORES". This would enable investors to lodge and follow up their complaints and track the status of redressal of such complaints from anywhere. For more details, investors are requested to visit the website www.scores.gov.in.

STATUS OF INVESTOR COMPLAINTS

We confirm that we have not received any investor complaint during the three years preceding the date of this Draft Red Herring Prospectus and hence there are no pending investor complaints as on the date of this Draft Red Herring Prospectus.

DISPOSAL OF INVESTOR GRIEVANCES BY LISTED COMPANIES UNDER THE SAME MANAGEMENT AS OUR COMPANY

We don't have any listed company under the same management or any listed subsidiaries or any listed Promoter.

EXEMPTION FROM COMPLYING WITH ANY PROVISIONS OF SECURITIES LAWS, IF ANY, GRANTED BY SEBI

Our Company has not sought for any exemptions from complying with any provisions of securities laws.

PRICE INFORMATION OF PAST ISSUES HANDLED BY THE BOOK RUNNING LEAD MANAGER

For details regarding the track record of Erudore Capital Private Limited, as specified under circular reference CIR/MIRSD/1/2012 dated January 10, 2012 issued by the SEBI, please refer to the website of the Book Running Lead Manager at https://erudorecapital.com/track-record-1/.

(The rest of the page is intentionally left blank)

Disclosure of Price Information of past Offers handled by Erudore Capital Private Limited:

Sr. No.	Issue Name	Issue Size (₹ in Cr)	Issue Price (in ₹)	Listing date	Opening price on listing date (in ₹)	+/- % change in closing price, [+/- % change in closing benchmark]- 30th calendar days from listing	+/- % change in closing price, [+/- % change in closing benchmark]- 90th calendar days from listing	+/- % change in closing price, [+/- % change in closing benchmark]- 180th calendar days from listing
1	Yashhtej Industries (India) Limited	88.87	110	February 25, 2026	88.00	-53.27%, [-9.80%]	-40.45%, [11.71%]	-

Summary Statement of Disclosure:

Financial Year	Total no. of IPOs	Total amount of funds raised (₹ in Cr)	No. of IPOs trading at discount – 30th calendar days from listing			No. of IPOs trading at premium – 30th calendar days from listing			No. of IPOs trading at discount – 180th calendar days from listing			No. of IPOs trading at premium – 180th calendar days from listing		
			Over 50%	Between 25-50%	Less than 25%	Over 50%	Between 25-50%	Less than 25%	Over 50%	Between 25-50%	Less than 25%	Over 50%	Between 25-50%	Less than 25%
SME Board														
2024-25	Not applicable													
2025-26	1	88.87	1	-	-	-	-	-	-	-	-	-	-	-
2026-27	Not applicable													
Main Board - Nil														

Note:

1. The BSE SME IPO Index is considered as the Benchmark.
2. "Issue Price" is taken as "Base Price" for calculating % Change in Closing Price of the respective Issues on 30th/ 90th/180th Calendar days from listing.
3. "Closing Benchmark" on the listing day of respective scripts is taken as "Base Benchmark" for calculating % Change in Closing Benchmark on 30th/ 90th/180th Calendar days from listing. Although it shall be noted that for comparing the scripts with Benchmark, the +/- % Change in Closing Benchmark has been calculated based on the Closing Benchmark on the same day as that of calculated for respective script in the manner provided in Note No. 4 below.
4. In case 30th/ 90th/180th day is not a trading day, closing price on BSE/NSE of the previous trading day for the respective Scripts has been considered, however, if scripts are not traded on that previous trading day then last trading price has been considered.

(Rest of the page is intentionally left blank)

SECTION VIII: ISSUE RELATED INFORMATION

TERMS OF THE ISSUE

The Equity Shares being issued pursuant to this Issue shall be subject to the provision of the Companies Act, SEBI (ICDR) Regulations, 2018 read along with SEBI ICDR (Amendment) Regulations, SCRA, SCRR, Memorandum and Articles, the terms of this Draft Red Herring Prospectus, Bid Cum Application Form, the Revision Form, the Confirmation of Allocation Note ('CAN') and other terms and conditions as may be incorporated in the Allotment advices and other documents/ certificates that may be executed in respect of the Issue. The Equity Shares shall also be subject to laws, guidelines, rules, notifications, and regulations relating to the issue of capital and listing of securities issued from time to time by SEBI, the Government of India, NSE, ROC, RBI and / or other authorities, as in force on the date of the Issue and to the extent applicable.

Please note that, in accordance with the Regulation 256 of the SEBI (ICDR), Regulations, 2018 read with SEBI circular no. CIR/CFD/POLICYCELL/11/2015 dated November 10, 2015 all the Bidders has to compulsorily apply through the ASBA Process. As an alternate payment mechanism, Unified Payments Interface (UPI) has been introduced (vide SEBI Circular Ref: SEBI/HO/CFD/DIL2/CIR/P/2018/138 dated November 1, 2018) as a payment mechanism in a phased manner with ASBA for bids in public Issues by individual investors who applies for minimum application size through intermediaries (Syndicate members, Registered Stock-Brokers, Registrar and Transfer agent and Depository Participants). From December 1, 2023, the UPI Mechanism for Individual Investors applying through Designated Intermediaries was made effective along-with the existing process existing timeline of T+3 days.

Further, vide the said circular, Registrar to the Issue and Depository Participants have been also authorised to collect the Bid Cum Application forms. Investors may visit the official website of the concerned stock exchange for any information on operationalization of this facility of form collection by Registrar to the Issue and DPs as and when the same is made available.

The Issue

The Issue comprises of a Fresh Issue of Equity shares.

Authority for the Issue

The present Public Issue of upto 65,96,000 Equity Shares which have been authorized by a resolution of the Board of Directors of our Company at their meeting held on June 25, 2026 and was approved by the Shareholders of our Company by passing Special Resolution at the Extra-Ordinary General Meeting held on June 26, 2026 in accordance with the provisions of Section 62 (1) (c) of the Companies Act, 2013.

Ranking of Equity Shares

The Equity Shares being issued shall be subject to the provisions of the Companies Act, 2013 and our Memorandum and Articles of Association and shall rank pari-passu in all respects with the existing Equity Shares of our Company including in respect of the rights to receive dividends and other corporate benefits, if any, declared by us after the date of Allotment. *For further details, please refer to the section titled "Main Provisions of the Articles of Association" beginning on page no. 375 of the Draft Red Herring Prospectus.*

Mode of Payment of Dividend

The declaration and payment of dividend will be as per the provisions of Companies Act, the Articles of Association, the provision of the SEBI (Listing Obligations and Disclosure Requirements) Regulations, 2015 and recommended by the Board of Directors and the Shareholders at their discretion and will depend on a number of factors, including but not limited to earnings, capital requirements and overall financial condition of our Company. We shall pay dividends in cash and as per provisions of the Companies Act. *For further details, please refer to chapter titled "Dividend Policy" beginning on page no. 226 of the Draft Red Herring Prospectus.*

Face Value, Issue Price, Floor Price and Price Band

The face value of each Equity Share is ₹ 10/- and the Issue Price at the lower end of the Price Band is ₹ [●] per Equity Share ("Floor Price") and at the higher end of the Price Band is ₹ [●] per Equity Share ("Cap Price").

The Price Band and the minimum Bid Lot size for the Issue will be decided by our Company in consultation with the BRLM, and advertised in the Pre Issue and Price Band advertisement in All editions of Financial Express (a widely circulated English national daily newspaper), and All editions of Jansatta (a widely circulated Hindi national daily newspaper), and Marathi editions of Mumbai Lakshadeep (a widely circulated Regional language daily newspaper) (Marathi being the regional language of Maharashtra, where our Registered Office is located), each with wide circulation, at least two Working Days prior to the Bid/ Issue Opening Date and shall be made available to the Stock Exchanges for the purpose of uploading the same on their websites. The Price Band, along with the relevant financial ratios calculated at the Floor Price and at the Cap Price, shall be pre-filled in the Bid cum Application Forms available on the website of the Stock Exchange.

The Issue Price shall be determined by our Company in consultation with the Book Running Lead Manager, after the Bid/ Issue Closing Date on the basis of assessment of market demand for the Equity Shares issued by way of Book Building Process.

At any given point of time, there shall be only one denomination of Equity Shares.

The Issue Price shall be determined by our Company in consultation with the Book Running Lead Manager and is justified under the *chapter titled "Basis of Issue Price" beginning on page no. 107 of this Draft Red Herring Prospectus.*

Compliance with SEBI (ICDR) Regulations, 2018

Our Company shall comply with all requirements of the SEBI (ICDR) Regulations, 2018.

Compliance with disclosure and accounting norms

Our Company shall comply with all disclosure and accounting norms as specified by SEBI from time to time.

Rights of the Equity Shareholders

Subject to applicable laws, rules, regulations and guidelines and the Articles of Association, the equity shareholders shall have the following rights:

- Right to receive dividend, if declared;
- Right to receive Annual Reports & notices to members;
- Right to attend general meetings and exercise voting rights, unless prohibited by law;
- Right to vote on a poll either in person or by proxy;
- Right to receive offer for rights shares and be allotted bonus shares, if announced;
- Right to receive surplus on liquidation; subject to any statutory or preferential claims being satisfied;
- Right of free transferability of the Equity Shares; and
- Such other rights, as may be available to a shareholder of a listed Public Limited Company under the Companies Act, terms of the SEBI (Listing Obligations and Disclosure Requirements) Regulations, 2018 and the Memorandum and Articles of Association of our Company.

For a detailed description of the main provision of the Articles of Association of our Company relating to voting rights, dividend, forfeiture and lien, transfer, transmission and/ or consolidation/ splitting, etc., please refer to section titled "Main Provisions of the Articles of Association" beginning on page no. 375 of the Draft Red Herring Prospectus.

(The rest of the page is intentionally left blank)

Minimum Application Value, Market Lot and Trading Lot

The trading of the Equity Shares will happen in the minimum contract size of [●] Equity Shares and the same may be modified by the NSE Emerge from time to time by giving prior notice to investors at large.

Allocation and allotment of Equity Shares through this Issue will be in multiples of [●] Equity Shares and is subject to a minimum allotment of [●] Equity Shares to the successful applicants in terms of the SEBI circular No. CIR/MRD/DSA/06/2012 dated February 21, 2012.

In accordance with Regulation 267 (2) of the SEBI ICDR Regulations, our Company shall ensure that the minimum application size shall be two lots per application, provided that the minimum application size shall be above ₹ 2 Lakhs.

Allotment only in Dematerialised Form

In terms of Section 29 of Companies Act, 2013, the Equity Shares shall be allotted only in dematerialised form. As per the SEBI Regulations, the trading of the Equity Shares shall only be in dematerialised form. In this context, two agreements have been signed among our Company, the respective Depositories and the Registrar and Share Transfer Agent to the Issue:

1. Tripartite agreement dated June 02, 2026, between our Company, NSDL and the Registrar and Share Transfer Agent to the Issue.
2. Tripartite agreement dated June 15, 2026, between our Company, CDSL and the Registrar and Share Transfer Agent to the Issue.

The ISIN no of our company is INE1NVJ01026.

Minimum Number of Allottees

Further in accordance with the Regulation 268(1) of SEBI ICDR Regulation, 2018 read along with SEBI ICDR (Amendment) Regulations, 2025, the minimum number of allottees in this Issue shall be 200 shareholders. In case the minimum number of prospective allottees is less than 200, no allotment will be made pursuant to this Issue and all the monies blocked by SCSBs shall be unblocked within two (2) working days of closure of Issue.

Joint Holders

Where 2 (two) or more persons are registered as the holders of any Equity Shares, they will be deemed to hold such Equity Shares as joint-holders with benefits of survivorship.

Jurisdiction

Exclusive Jurisdiction for the purpose of this Issue is with the competent courts/authorities in India.

The Equity Share have not been and will not be registered under the U.S. Securities Act or any state securities laws in the United States and may not be issued or sold within the United States or to, or for the account or benefit of, U.S. personal (as defined in Regulations), except pursuant to an exemption from, or in a transaction not subject to, the registration requirements of the U.S. Securities Act and applicable U.S. state securities laws. Accordingly, the Equity Shares are being issued and sold only outside the United States in off-shore transactions in reliance on Regulation S under the U.S. Securities Act and the applicable laws of the jurisdiction where those issues and sales occur.

The Equity Shares have not been and will not be registered, listed or otherwise qualified in any other jurisdiction outside India and may not be issued or sold, and applications may not be made by persons in any such jurisdiction, except in compliance with the applicable laws of such jurisdiction.

(The rest of the page is intentionally left blank)

Nomination Facility to Investor

In accordance with Section 72 of the Companies Act, 2013 the sole or first applicant, along with other joint applicant, may nominate any one person in whom, in the event of the death of sole applicant or in case of joint applicant, death of all the applicants, as the case may be, the Equity Shares allotted, if any, shall vest. A person, being a nominee, entitled to the Equity Shares by reason of the death of the original holder(s), shall in accordance with Section 72 of the Companies Act, 2013 be entitled to the same advantages to which he or she would be entitled if he or she were the registered holder of the Equity Share(s). Where the nominee is a minor, the holder(s) may make a nomination to appoint, in the prescribed manner, any person to become entitled to Equity Share(s) in the event of his or her death during the minority. A nomination shall stand rescinded upon a sale of equity share(s) by the person nominating. A buyer will be entitled to make a fresh nomination in the manner prescribed. Fresh nomination can be made only on the prescribed form available on request at the Registered Office of our Company or to the Registrar and Transfer Agents of our Company.

In accordance with Section 72 of the Companies Act, 2013 any Person who becomes a nominee by virtue of Section 72 of the Companies Act, 2013 shall upon the production of such evidence as may be required by the Board, elect either:

- To register himself or herself as the holder of the Equity Shares; or
- To make such transfer of the Equity Shares, as the deceased holder could have made.

Further, the Board may at any time give notice requiring any nominee to choose either to be registered himself or herself or to transfer the Equity Shares, and if the notice is not complied with within a period of 90 (ninety) days, the Board may thereafter withhold payment of all dividends, bonuses or other moneys payable in respect of the Equity Shares, until the requirements of the notice have been complied with.

Since the allotment of Equity Shares in the Issue is in dematerialized form, there is no need to make a separate nomination with us. Nominations registered with the respective depository participant of the applicant would prevail. If the investors require changing the nomination, they are requested to inform their respective depository participant.

Restrictions on transfer and transmission of Equity shares or Debentures and on their Consolidation or Splitting

Except for the lock-in of the pre-Issue capital of our Company, Promoter's minimum contribution as provided under the *chapter titled "Capital Structure" beginning on page no. 78 of this Draft Red Herring Prospectus* and except as provided in the Articles of Association there are no restrictions on transfer of Equity Shares. *Further, there are no restrictions on the transmission of shares/debentures and on their consolidation/splitting, except as provided in the Articles of Association. For details, please refer section titled "Main Provisions of the Articles of Association" beginning on page no. 375 of the Draft Red Herring Prospectus.*

The above information is given for the benefit of the Bidders. The Bidders are advised to make their own enquiries about the limits applicable to them. Our Company and the Book Running Lead Managers do not accept any responsibility for the completeness and accuracy of the information stated hereinabove. Our Company and the Book Running Lead Manager are not liable to inform the investors of any amendments or modifications or changes in applicable laws or regulations, which may occur after the date of this Draft Red Herring Prospectus. Bidders are advised to make their independent investigations and ensure that the number of Equity Shares Applied for do not exceed the applicable limits under laws or regulations.

Withdrawal of the Issue

Our Company in consultation with the BRLM, reserve the right to not proceed with the Issue after the Issue Opening Date but before the Allotment. In such an event, our Company would issue a public notice in the newspapers in which the pre-Issue advertisements were published, within two (2) days of the Issue Closing Date or such other time as may be prescribed by SEBI, providing reasons for not proceeding with the Issue. The Book Running Lead Manager, through the Registrar to the Issue, shall notify the SCSBs to unblock the bank accounts of the ASBA Bidders within one (1) Working Day from the date of receipt of such notification. Our Company shall also inform the same to the Stock Exchanges on which Equity Shares are proposed to be listed.

Notwithstanding the foregoing, this Issue is also subject to obtaining (i) the final listing and trading approvals of the Stock Exchange, which our Company shall apply for after Allotment (ii) the final RoC approval of the Red Herring Prospectus after it is filed with the RoC. If our Company in consultation with BRLM withdraws the Issue after the Issue Closing Date and thereafter determines that it will proceed with an Issue of the Equity Shares, our Company shall file a fresh Draft Red Herring Prospectus/Red Herring Prospectus with Stock Exchange.

Bid /Issue Program

An indicative timetable in respect of the Issue is set out below:

Events	Indicative Dates
Anchor Portion Issue Opens/Closes On	**[●]**
Bid/Issue Opening Date	**[●]**
Bid/Issue Closing Date	**[●]**
Finalization of Basis of Allotment with the Designated Stock Exchange	On or before **[●]**
Initiation of Allotment / Refunds / Unblocking of Funds from ASBA Account or UPI ID linked bank account**	On or before **[●]**
Credit of Equity Shares to Demat accounts of Allottees	On or before **[●]**
Commencement of trading of the Equity Shares on the Stock Exchange	On or before **[●]**

***In case of any delay in unblocking of amounts in the ASBA Accounts (including amounts blocked through the UPI Mechanism) exceeding two Working Days from the Bid/ Issue Closing Date for cancelled/deleted ASBA Forms, the Bidder shall be compensated at a uniform rate of ₹100 per day or 15% per annum of the Bid Amount, whichever is higher, for the entire duration of delay exceeding two Working Days from the Bid/ Issue Closing Date by the intermediary responsible for causing such delay in unblocking. The BRLMs shall, in its sole discretion, identify and fix the liability on such intermediary or entity responsible for such delay in unblocking. The Bidder shall be compensated by the manner specified in the SEBI circular no. SEBI/HO/CFD/DIL2/CIR/P/2021/2480/1/M dated March 16, 2021 read with the SEBI circular no. SEBI/HO/CFD/DIL2/P/CIR/2021/570 dated June 2, 2021, SEBI circular no. SEBI/HO/CFD/DIL2/CIR/P/2022/51 dated April 20, 2022 and SEBI circular no. SEBI/HO/CFD/DIL2/P/CIR/2022/75 dated May 30, 2022, and the SEBI ICDR Master Circular, which for the avoidance of doubt, shall be deemed to be incorporated in the deemed agreement of the Company with the Self Certified Syndicate Bank(s)("SCSB"), to the extent applicable. The processing fees for applications made by UPI Bidders using the UPI Mechanism may be released to the remitter banks (SCSBs) only after such banks provide a written confirmation in compliance with SEBI circular no. SEBI/HO/CFD/DIL2/P/CIR/2021/570 dated June 2, 2021 read with SEBI circular no. SEBI/HO/CFD/DIL2/CIR/P/2021/2480/1/M dated March 16, 2021 and SEBI circular no. SEBI/HO/CFD/DIL2/CIR/P/2022/51 dated April 20, 2022, SEBI circular no. SEBI/HO/CFD/DIL2/P/CIR/2022/75 dated May 30, 2022 read with SEBI master circular no. SEBI/HO/CFD/PoD- 2/P/CIR/2023/00094 dated June 21, 2023, for which the avoidance of doubt, shall be deemed to be incorporated in the deemed agreement of the Company with the SCSBs, to the extent applicable. The processing fee for applications made by the UPI Bidders using the UPI Mechanism may be released to the remitter banks (SCSBs) only after such banks provide a written confirmation on compliance with SEBI circular no. SEBI/HO/CFD/DIL2/P/CIR/2021/570 dated June 2, 2021 read with SEBI circular no. SEBI/HO/CFD/DIL2/CIR/P/2021/2480/1/M dated March 16, 2021 and SEBI circular no. SEBI/HO/CFD/DIL2/CIR/P/2022/51 dated April 20, 2022 and SEBI Circular no. SEBI/HO/CFD/DIL2/P/CIR/2022/75 dated May 30, 2022 read with SEBI master circular no. SEBI/HO/MIRSD/POD-1/P/CIR/2023/70 dated May 17, 2023.*

The above timetable is indicative and does not constitute any obligation or liability on our Company or our Promoters or the BRLM.

Whilst our Company shall ensure that all steps for the completion of the necessary formalities for the listing and the commencement of trading of the Equity Shares on the Stock Exchanges are taken within such time as prescribed by SEBI, the timetable may be extended due to various factors, such as extension of the Bid/Issue Period by our Company in consultation with the BRLM or any delay in receiving the final listing and trading approval from the Stock Exchanges. In terms of the SEBI master circular no. SEBI/HO/CFD/PoD-2/P/CIR/2023/00094 dated June 21, 2023, our Company shall within three days from the closure of the Bid/Issue Period, refund the subscription amount received in case of non – receipt of minimum subscription or in case our Company fails to obtain listing or trading permission from the Stock Exchanges for the Equity Shares. The

commencement of trading of the Equity Shares will be entirely at the discretion of the Stock Exchange and in accordance with the applicable laws. The Shareholder, severally and not jointly, has specifically confirmed that it shall extend such reasonable support and co-operation required by our Company and the BRLM for completion of the necessary formalities for listing and commencement of trading of the Equity Shares at the Stock Exchange within such time as prescribed by SEBI.

Due to limitation of time available for uploading the Applications on the Issue Closing Date, the Applicants are advised to submit their applications one day prior to the Issue Closing Date and, in any case, no later than 05.00 P.M. (IST) on the Issue Closing Date. All times mentioned in this Draft Red Herring Prospectus are as per Indian Standard Time. Applicants are cautioned that in the event a large number of Applications are received on the Issue Closing Date, as is typically experienced in public offerings, some Applications may not get uploaded due to lack of sufficient time. Such Applications that cannot be uploaded will not be considered for allocation under the Issue. Applications will be accepted only on Business Days. Neither our Company nor the Book running Lead Manager is liable for any failure in uploading the Applications due to faults in any software/hardware system or otherwise.

SEBI vide circular SEBI/HO/CFD/TPD1/CIR/P/2023/140 dated August 9, 2023 has reduced the post issue timeline for initial public offerings. Accordingly, the Issue will be made under UPI Phase III on mandatory T+3 days listing basis, subject to the timing of the Issue and any circulars, clarification or notification issued by the SEBI from time to time, including with respect to SEBI circular SEBI/HO/CFD/TPD1/CIR/P/2023/140 dated August 9, 2023.

The Registrar to the Issue shall submit the details of cancelled/withdrawn/deleted applications to the SCSB's on daily basis within 60 minutes of the Bid/Issue closure time from the Bid/Issue Opening Date till the Bid/Issue Closing Date by obtaining the same from the Stock Exchanges.

In terms of the UPI Circulars, in relation to the Issue, the BRLM will be required to submit reports of compliance with timelines and activities prescribed by SEBI in connection with the allotment and listing procedure within such time as prescribed by SEBI, identifying non-adherence to timelines and processes and an analysis of entities responsible for the delay and the reasons associated with it.

In case of any delay in unblocking of amounts in the ASBA Accounts (including amounts blocked through the UPI Mechanism) exceeding two Working Days from the Bid/Issue Closing Date, the Bidder shall be compensated for the entire duration of delay exceeding two Working Days from the Bid/Issue Closing Date by the intermediary responsible for causing such delay in unblocking, in the manner specified in the UPI Circulars, to the extent applicable, which for the avoidance of doubt, shall be deemed to be incorporated herein. The BRLM shall, in their sole discretion, identify and fix the liability on such intermediary or entity responsible for such delay in unblocking. Further, the issue procedure is subject to change basis any revised SEBI circulars to this effect.

In case of force majeure, banking strike or similar circumstances, the issuer may, for reasons to be recorded in writing, extend the (Issue) period disclosed in the Prospectus, for a minimum period of one (1) working day, subject to the Issue Period not exceeding ten (10) working days.

In case of discrepancy in the data entered in the electronic book vis-à-vis the data contained in the physical or the electronic Application Form, for a particular Bidder, the details as per the file received from the Stock Exchange may be taken as the final data for the purpose of Allotment. In case of discrepancy in the data entered in the electronic book vis-à-vis the data contained in the physical or electronic Application Form, for a particular ASBA Bidder, the Registrar to the Issue shall ask the relevant SCSB or the member of the Syndicate for rectified data.

Any circulars or notifications from SEBI after the date of this Draft Red Herring Prospectus may result in changes to the listing timelines. Further, the issue procedure is subject to change basis any revised SEBI circulars to this effect.

(The rest of the page is intentionally left blank)

Submission of Bids (other than Bids from Anchor Investors):

Bid/ Issue Period (except the Bid/ Issue Closing Date)	
Submission and Revision in Bids	Only between 10.00 a.m. and up to 5.00 p.m. Indian Standard Time **("IST")**
Bid/Issue Closing Date*	
Submission of Electronic Bids (Online ASBA through 3- in-1 accounts) – For Individual Applicants, other than QIBs and Non-Institutional Applicants	Only between 10.00 a.m. and up to 4.00 p.m. IST
Submission of Electronic Bids (Bank ASBA through Online channels like Internet Banking, Mobile Banking and Syndicate UPI ASBA applications where Bid Amount is up to ₹ 500,000)	Only between 10.00 a.m. and up to 4.00 p.m. IST
Submission of Electronic Bids (Syndicate Non- Individual Applicants, Non- Individual Applications)	Only between 10.00 a.m. and up to 3.00 p.m. IST
Submission of Physical Bids (Bank ASBA)	Only between 10.00 a.m. and up to 1.00 p.m. IST
Submission of Physical Bids (Syndicate Non- Individual Applications, Non-Individual Applications where Bid Amount is more than ₹500,000)	Only between 10.00 a.m. and up to 12.00 p.m. IST
Modification/ Revision of Bids	
Upward Revision of Bids by QIBs and Non-Institutional Bidders categories#	Only between 10.00 a.m. and up to 4.00 p.m. IST on Bid/ Issue Closing Date
Upward Revision of Bids by Individual investors#	Only between 10.00 a.m. and up to 4.00 p.m. IST

** UPI mandate and time and date shall be at 5:00 p.m. on Bid/Issue Closing Date*
 # All category of Bidders can neither revise their bids downwards nor cancel/withdraw their bids

On the Bid/Issue Closing Date, the Bids shall be uploaded until 4.00 p.m. IST in case of Bids by QIBs, Non-Institutional Applicants, and until 5:00 p.m. IST or such extended time as permitted by the Stock Exchange in case of Bids by Individual Investors.

On Bid/Issue Closing Date, extension of time may be granted by Stock Exchange only for uploading Bids received by Individual Investors after taking into account the total number of Bids received up to closure of timings for acceptance of Bid Cum Application Forms as stated herein and as reported by the Book Running Lead Manager to the Stock Exchange.

The Registrar to the Issue shall submit the details of cancelled/ deleted applications to the SCSBs on a daily basis within 60 minutes of the Bid closure time from the Bid/ Issue Opening Date till the Bid/ Issue Closing Date by obtaining the same from the Stock Exchanges. The SCSBs shall unblock such applications by the closing hours of the Working Day and submit the confirmation to the BRLM and the RTA on a daily basis.

To avoid duplication, the facility of re-initiation provided to Syndicate Members, if any shall preferably be allowed only once per Bid/batch and as deemed fit by the Stock Exchange, after closure of the time for uploading Bids.

It is clarified that Bids not uploaded on the electronic bidding system or in respect of which the full Bid Amount is not blocked by SCSBs, or not blocked under the UPI Mechanism in the relevant ASBA Account, as the case maybe, would be rejected.

Due to limitation of time available for uploading the Bids on the Bid/Issue Closing Date, Bidders are advised to submit their Bids one day prior to the Bid/Issue Closing Date. Any time mentioned in this Draft Red Herring Prospectus is Indian Standard Time. Bidders are cautioned that, in the event, large number of Bids are received on the Bid/Issue Closing Date, as is typically experienced in public issuing, some Bids may not get uploaded due to lack of sufficient time. Such Bids that cannot be uploaded will not be considered for allocation under the Issue. Bids will be accepted only during Monday to Friday (excluding any public holiday). None among our Company or any Member of the Syndicate shall be liable for any failure in (i) uploading the Bids due to faults in any software/ hardware system or blocking of application amount by the SCSBs on receipt of instructions from the Sponsor Bank on account of any errors, omissions or non-compliance by various parties involved in, or any other fault, malfunctioning or breakdown in, or otherwise, in the UPI Mechanism.

In case of any discrepancy in the data entered in the electronic book vis-a-vis data contained in the physical Bid cum Application Form, for a particular Bidder, the details of the Bid file received from the Stock Exchanges may be taken. Our Company in consultation with the BRLM, reserve the right to revise the Price Band during the Bid/Issue Period, provided that the Cap Price shall be less than or equal to 120% of the Floor Price and the Floor Price shall not be less than the face value of the Equity Shares. The revision in the Price Band shall not exceed 20% on either side, i.e. the Floor Price can move up or down to the extent of 20% of the Floor Price and the Cap Price will be revised accordingly. The Floor Price shall not be less than the face value of the Equity Shares.

In case of any revision to the Price Band, the Bid/Issue Period will be extended by at least three additional Working Days following such revision of the Price Band, subject to the Bid/Issue Period not exceeding a total of 10 Working Days.

In cases of force majeure, banking strike or similar circumstances, our Company in consultation with the BRLM, for reasons to be recorded in writing, extend the Bid/Issue Period for a minimum of one Working Days, subject to the Bid/ Issue Period not exceeding 10 Working Days. Any revision in the Price Band and the revised Bid/Issue Period, if applicable, will be widely disseminated by notification to the Stock Exchange, by issuing a public notice, and also by indicating the change on the respective websites of the BRLM and the terminals of the Syndicate Members, if any and by intimation to SCSBs, other Designated Intermediaries and the Sponsor Bank, as applicable. In case of revision of Price Band, the Bid Lot shall remain the same.

Minimum Subscription

This Issue is not restricted to any minimum subscription level. This Issue is 100% underwritten as per Regulation 260(1) of SEBI ICDR Regulations.

As per Section 39 of the Companies Act, 2013, if the "stated minimum amount" has not been subscribed and the sum payable on application is not received within a period of 30 days from the date of Prospectus, the application money has to be returned within such period as may be prescribed. If our Company does not receive the 100% subscription of the Issue through the Issue Document including devolvement of Underwriters, our Company shall forthwith refund the entire subscription amount received in accordance with applicable law including the SEBI master circular no. SEBI/HO/CFD/PoD-2/P/CIR/2023/00094 dated June 21, 2023. If there is a delay beyond Two days after our Company becomes liable to pay the amount, our Company and our Directors, who are officers in default, shall pay interest at the rate of 15% per annum.

Further, in accordance with Regulation 268(1) of the SEBI (ICDR) Regulations, our Company shall ensure that the number of prospective allottees to whom the Equity Shares will allotted will not be less than 200 (Two Hundred).

Further, in accordance with Regulation 267(2) of the SEBI (ICDR) Regulations, our Company shall ensure that the minimum application size in terms of number of specified securities shall not be less than ₹ 2,00,000 (Rupees Two Lac only) per application. The Equity Shares have not been and will not be registered, listed or otherwise qualified in any other jurisdiction outside India and may not be issued or sold, and applications may not be made by persons in any such jurisdiction, except in compliance with the applicable laws of such jurisdiction.

The Equity Shares have not been and will not registered, listed or otherwise qualified in any other jurisdiction outside India and may not be issued or sold, and applications may not be made by persons in any such jurisdiction, expect in compliance with the application law of such jurisdiction.

New Financial Instruments

There are no new financial instruments such as deeply discounted bonds, debentures, warrants, secured premium notes, etc. issued by our Company.

(The rest of the page is intentionally left blank)

Arrangements for disposal of odd lots

The trading of the Equity Shares will happen in the minimum contract size of [●] shares in terms of the SEBI circular No. CIR/MRD/DSA/06/2012 dated February 21, 2012. However, the Market Maker shall buy the entire shareholding of a shareholder in odd lot, where value of such shareholding is less than the minimum contract size allowed for trading on the SME Exchange.

Allotment of Securities in Dematerialised Form

In accordance with SEBI ICDR Regulation, 2018 read along with SEBI ICDR (Amendment) Regulations, 2025, Allotment of Equity Shares to successful bidders will only be in the dematerialized form. Bidders will not have the option of Allotment of the Equity Shares in physical form. The Equity Shares on Allotment will be traded only on the dematerialized segment of the Stock Exchange.

Application by Eligible NRIs, FPIs or VCFs registered with SEBI

It is to be understood that there is no reservation for Eligible NRIs, FPIs or VCF registered with SEBI. Such Eligible NRIs, FPIs or VCF registered with SEBI will be treated on the same basis with other categories for the purpose of Allocation.

NRIs, FPIs/FIIs and foreign venture capital investors registered with SEBI are permitted to purchase shares of an Indian company in a public Issue without the prior approval of the RBI, so long as the price of the equity shares to be issued is not less than the price at which the equity shares are issued to residents. The transfer of shares between an Indian resident and a non-resident does not require the prior approval of the FIPB or the RBI, provided that (i) the activities of the investee company are under the automatic route under the foreign direct investment ("FDI") Policy and the non-resident shareholding is within the sectoral limits under the FDI policy; and (ii) the pricing is in accordance with the guidelines prescribed by the SEBI/RBI.

The current provisions of Foreign Exchange Management (Non-debt Instruments) Rules, 2019 and Foreign Exchange Management (Mode of Payment and Reporting of Non-Debt Instruments) Regulations, 2019, provides a general permission for the NRIs, FPIs and foreign venture capital investors registered with SEBI to invest in shares of Indian companies by way of subscription in an IPO. However, such investments would be subject to other investment restrictions Foreign Exchange Management (Non-debt Instruments) Rules, 2019 and Foreign Exchange Management (Mode of Payment and Reporting of Non-Debt Instruments) Regulations, 2019, RBI and/or SEBI regulations as may be applicable to such investors.

The Allotment of the Equity Shares to Non-Residents shall be subject to the conditions, if any, as may be prescribed by the Government of India/RBI while granting such approvals.

As per the extent Guidelines of the Government of India, OCBs cannot participate in this Issue.

Migration to Main Board

As per the provisions of the Chapter IX of the SEBI (ICDR) Regulation, 2018 read with SEBI ICDR (Amendment) Regulations, 2025 to the extent applicable, our Company may migrate to the main board of NSE from the NSE Emerge on a later date subject to the following:

As per Regulation 280(2) of the SEBI ICDR Regulation, 2018 read along with SEBI ICDR (Amendment) Regulations, 2025, where the post-issue paid up capital of the Company listed on a NSE Emerge is likely to increase beyond twenty-five crore rupees by virtue of any further issue of capital by the Company by way of rights issue, preferential issue, bonus issue, etc. the Company shall migrate its equity shares listed on a NSE Emerge to the Main Board and seek listing of the equity shares proposed to be issued on the Main Board subject to the fulfilment of the eligibility criteria for listing of equity shares laid down by the Main Board.

Provided that no further issue of capital shall be made unless –

a) the shareholders have approved the migration by passing a special resolution through postal ballot wherein the votes cast by shareholders other than promoters in favour of the proposal amount to at least two times the number of votes cast by shareholders other than promoter shareholders against the proposal; and
b) the Company has obtained an in-principle approval from the Main Board for listing of its entire specified securities on it.

Provided further that where the post-issue paid-up capital pursuant to further issue of capital including by way of rights issue, preferential issue, bonus issue, is likely to increase beyond ₹25 crores, the Company may undertake further issuance of capital without migration from SME exchange to the main board, subject to the undertaking to comply with the provisions of the Securities and Exchange Board of India (Listing Obligations and Disclosure Requirements) Regulations, 2015, as applicable to companies listed on the Main Board of the stock exchange(s).

If the Paid-up Capital of the company is more than ₹10 crores but below ₹25 crores, we may still apply for migration to the main board if the same has been approved by a special resolution through postal ballot wherein the votes cast by the shareholders other than the promoters in favour of the proposal amount to at least two times the number of votes cast by shareholders other than promoter shareholders against the proposal.

As per NSE Circular dated April 24, 2025 our Company may migrate its securities from SME Platform of NSE Limited to main board platform of the NSE Limited subject to the following conditions:

Parameter	Criterion
Paid up Capital & Market Capitalisation	Paid-up equity capital is not less than ₹ 10 crores and Average capitalisation shall not be less than ₹ 100 crores. For this purpose, capitalisation will be the product of the price (average of the weekly high and low of the closing prices of the related shares quoted on the stock exchange for 3 months preceding the application date) and the post issue number of equity shares
Revenue from Operation & EBIDTA	The revenue from operations should be greater than ₹ 100 Cr in the last financial year and should have positive operating profit from operations for at least 2 out 3 financial years.
Listing period	Should have been listed on SME platform of the Exchange for at least 3 years.
Public Shareholders	The total number of public shareholders should be at least 500 on the date of application.
Promoter & Promoter Group Holding	Promoter and Promoter Group shall be holding at least 20% of the Company at the time of making application. Further, as on date of application for migration the holding of Promoter's should not be less than 50% of shares held by them on the date of listing.
Other Listing conditions	No proceedings have been admitted under Insolvency and Bankruptcy Code against Applicant company and promoting company. The company has not received any winding up petition admitted by NCLT/IBC. The net worth of the company should be at least 75 crores. No Material regulatory action in the past 3 years like suspension of trading against the applicant Company and Promoter by any Exchange. No debarment of Company/Promoter, subsidiary Company by SEBI. No Disqualification/Debarment of director of the Company by any regulatory authority. The applicant company has no pending investor complaints in SCORES. Cooling period of two months from the date the security has come out of the trade-to-trade category or any other surveillance action, by other exchanges where the security has been actively listed. No Default in respect of payment of interest and /or principal to the debenture/bond/fixed deposit holders by the applicant, promoter/ Subsidiary Company.

Market Making

The shares issued through this issue are proposed to be listed on the NSE Emerge with compulsory market making through the registered Market Maker of the SME Exchange for a minimum period of three years or such other time as may be prescribed by the Stock Exchange, from the date of listing on the NSE Emerge.

For further details of the market making arrangement please refer to the heading titled "Details of Market Making Arrangement for this Issue" under the "chapter titled "General Information" beginning on page no. 77 of this Draft Red Herring Prospectus.

ISSUE STRUCTURE

This Issue is being made in terms of Regulation 229 (2) of Chapter IX of SEBI (ICDR) Regulations, 2018, as amended from time to time, whereby, an issuer whose post issue paid up capital is more than rupees ten crore and upto rupees twenty five crore, shall issue shares to the public and propose to list the same on the Small and Medium Enterprise Exchange ("**SME Exchange**", in this case being the NSE Emerge). *For further details regarding the salient features and terms of such an issue please refer chapter titled "Terms of the Issue" and "Issue Procedure" beginning on page no. 313 and 328 respectively of the Draft Red Herring Prospectus.*

The present Public Issue of up to 65,96,000 Equity Shares of face value of ₹10/- each has been authorized by a resolution of the Board of Directors of our Company at their meeting held on June 25, 2026, and was approved by the Shareholders of our Company by passing Special Resolution at the Extraordinary General Meeting held on June 26, 2026 in accordance with the provisions of Section 23, 62(1)(c) and other applicable provisions, if any, of the Companies Act, 2013.

The Issue comprises a reservation of [●] Equity Shares of face value of ₹10/- each for subscription by the designated Market Maker ("the Market Maker Reservation Portion") and Net Issue to Public of [●] Equity Shares of face value of ₹10/- each ("the Net Issue").

The Issue and the Net Issue will constitute [●]% and [●]% respectively of the post Issue paid up Equity Share Capital of our Company.

The Issue is being made by way of Book Building Process

Particulars of the Issue (2)	**Market Maker Reservation Portion**	**QIBs**(1)	**Non-Institutional Applicants**	**Individual Investors**
Number of Equity Shares available for allocation*(2)	Up to [●] Equity Shares	Not more than [●] Equity Shares.	Not less than [●] Equity Shares.	Not less than Equity Shares [●]
Percentage of Issue Size available for allocation	Not less than 5% of the Issue size	Not more than 50% of the Net Issue being available for allocation to QIB Bidders. However, up to 5% of the Net QIB Portion shall be available for allocation proportionately to Mutual Funds only. Mutual Funds participating in the Mutual Fund Portion will also be eligible for allocation in the remaining QIB Portion. The unsubscribed portion in the Mutual Fund Portion will be added to the Net QIB Portion. Up to [●] Equity Shares may be allocated on a discretionary basis to Anchor Investors of which 33.33% of the Anchor Investor Portion shall be reserved for Domestic	Not less than 15% of the Net Issue: Further, a) one third of the portion available to non-institutional investors shall be reserved for applicants with application size of more than two lots and up to such lots equivalent to not more than ₹10 lakhs b) two third of the portion available to non-institutional investors shall be reserved for applicants with application size of more than ₹10 lakhs, provided that the unsubscribed	Not less than 35% of the Net Issue

		Mutual Funds and 6.67% for Life Insurance Companies and Pension Funds, subject to valid Bid received from Mutual Funds at or above the Anchor Investor Allocation Price	portion in either the subcategories mentioned above could be allocated to applicants in the other sub-category of Non - Institutional Bidders	
Basis of Allotment	Firm Allotment	Proportionate as follows: a) Up to [●] Equity Shares shall be available for allocation on a proportionate basis to Mutual Funds only; and b) Up to [●] Equity Shares shall be available for allocation on a proportionate basis to all QIBs, including Mutual Funds receiving allocation as per (a) above c) Up to 60% of QIB Portion (of up to [●] Equity Shares) may be allocated on a discretionary basis to Anchor Investors of which Forty percent of the Anchor Investor Portion shall be reserved as: 33.33 percent for Domestic Mutual Funds and 6.67 percent for Life Insurance Companies and Pension Funds, subject to valid Bids being received at or above the Anchor Investors Allocation Price.	Proportionate basis subject to the availability of shares in non-institutional investors' category, the allotment of equity shares to each non-institutional category shall not be less than the minimum application size in non-institutional investor category, and the remaining shares, if any, shall be allotted on a proportionate basis, the [●] Equity Shares shall be allotted in multiples of [●] Equity Shares. *[For details, see chapter titled "Issue Procedure" beginning on page no. 328 of the Draft Red Herring Prospectus.]*	Proportionate basis subject to minimum allotment of [●] Equity Shares and further allotment in multiples of [●] Equity Shares each. *[For further details please refer to chapter titled "Issue Procedure" beginning on page no. 328 of this Draft Red Herring Prospectus.]*
Mode of Bid ^	Only through the ASBA Process	ASBA only except for Anchor Investors[(4)]	Through ASBA Process through banks or by using UPI ID for payment (upto ₹ 5 Lakh)	Through ASBA Process through banks or by using UPI ID for payment (upto ₹ 5 Lakh)
Mode of Allotment	Compulsorily in dematerialized form.			

Minimum Bid Size	[●] Equity Shares of face value of ₹ 10 each	Such number of Equity Shares and in multiples of [●] Equity Shares of face value of ₹ 10 each that shall be more than 2 lots and the Bid Amount exceeds ₹ 200,000	Such number of Equity Shares in multiples of [●] Equity Shares that shall be more than 2 lots and Bid size exceeds ₹ 200,000	Two Lots such that the application size shall be above ₹ 2 Lakhs in multiples of [●] Equity Shares.
Maximum Bid Size	[●] Equity Shares of face value of ₹ 10 each	Such number of Equity Shares in multiples of [●] Equity Shares not exceeding the size of the Issue, subject to applicable limits to the Applicant.	Such number of Equity Shares in multiples of [●] Equity Shares not exceeding the size of the Issue, subject to applicable limits to the Applicant.	Two Lots such that the application size shall be above ₹ 2 Lakhs in multiples of [●] Equity Shares
Trading Lot	[●] Equity Shares, however, the Market Maker may accept odd lots if any in the market as required under the SEBI (ICDR) Regulations, 2018.	[●] Equity Shares and in multiples thereof	[●] Equity Shares and in multiples thereof	[●] Equity Shares and in multiples thereof
Terms of Payment	Full Bid Amount shall be blocked by the SCSBs in the bank account of the ASBA Bidder or by the Sponsor Bank through the UPI Mechanism, that is specified in the ASBA Form at the time of submission of the ASBA Form.			
Who can apply (3)(5)	Market Maker	Public financial institutions as specified in Section 2(72) of the Companies Act 2013, scheduled commercial banks, multilateral and bilateral development financial institutions, mutual funds registered with SEBI, FPIs other than individuals, corporate bodies and family offices, VCFs, AIFs, FVCIs, registered with SEBI, state industrial development corporation, insurance company registered with IRDAI, provident fund with minimum corpus of ₹2500 lakhs, pension fund with minimum corpus of ₹2500 lakhs, National Investment Fund set up by the Government of India, insurance funds set up and managed by army, navy or air force of the Union of India, insurance funds set up and managed by the Department of Posts, India and Systemically Important	Resident Indian Individuals, Eligible NRIs, HUFs (in the name of Karta), Companies, Corporate Bodies, Scientific Institutions, Societies, Family Offices, Trusts, FPIs who are Individuals, Corporate Bodies and Family Offices.	Resident Indian Individuals, HUFs (in the name of Karta) and Eligible NRIs.

		NBFCs, in accordance with applicable laws including FEMA Rules.		

**Assuming full subscription in the Issue.*

^SEBI through its circular (SEBI/HO/CFD/DIL2/CIR/P/2022/45) dated April 5, 2022, has prescribed that all individual investors applying in initial public Issues opening on or after May 1, 2022, where the application amount is up to ₹5,00,000, shall use UPI. Individual investors Bidding under the Non-Institutional Portion Bidding for more than ₹200,000 and up to ₹500,000, using the UPI Mechanism, shall provide their UPI ID in the Bid-cum-Application Form for Bidding through Syndicate, sub-syndicate members, Registered Brokers, RTAs or CDPs, or online using the facility of linked online trading, demat and bank account (3 in 1 type accounts), provided by certain brokers. Further SEBI vide its circular no. SEBI/HO/CFD/DIL2/P/CIR/2022/75 dated May 30, 2022, has mandated that ASBA applications in public issues shall be processed only after the application monies are blocked in the bank accounts of the investors. Accordingly, Stock Exchanges shall, for all categories of investors viz. QIBs, NIIs and IIs and also for all modes through which the applications are processed, accept the ASBA applications in their electronic book building platform only with a mandatory confirmation on the application monies blocked.

1. *Our Company in consultation with the Book Running Lead Manager, may allocate up to 60% of the QIB Portion to Anchor Investors at the Anchor Investor Issue Price, on a discretionary basis, subject to there being (i) a maximum of two Anchor Investors, where allocation in the Anchor Investor Portion is up to ₹200.00 Lakhs, (ii) minimum of two and maximum of fifteen Anchor Investors, where the allocation under the Anchor Investor Portion is more than ₹200.00 Lakhs but up to ₹2,500.00 Lakhs under the Anchor Investor Portion, subject to a minimum Allotment of ₹100.00 Lakhs per Anchor Investor, and (iii) in case of allocation above ₹2,500.00 Lakhs under the Anchor Investor Portion, a minimum of five such investors and a maximum of fifteen Anchor Investors for allocation up to ₹2,500.00 Lakhs, and an additional ten Anchor Investors for every additional ₹2,500.00 Lakhs or part thereof will be permitted, subject to minimum allotment of ₹100.00 Lakhs per Anchor Investor. An Anchor Investor will make a minimum Bid of such number of Equity Shares, that the Bid Amount is at least ₹200.00 Lakhs. Forty percent of the Anchor portion shall be reserved in the following manner (i) 33.33% of the Anchor Investor Portion shall be reserved for domestic Mutual Funds; and (ii) 6.67% of the Anchor Investor Portion shall be reserved for Life Insurance Companies and Pension Funds, subject to valid Bids being received from domestic Mutual Funds and Life Insurance Companies and Pension Funds.*

2. *The SEBI ICDR Regulation, 2018 read along with SEBI ICDR (Amendment) Regulations, 2025, permits the Issue of securities to the public through the Book Building Process, which states that not less than 35% of the Net Issue shall be available for allocation to Individual Investors who applies for minimum application size. Not less than 15% of the Net Issue shall be available for allocation to Non-Institutional Investors of which one-third of the Non-Institutional Portion will be available for allocation to Bidders with an application size of more than two lots and up to such lots as equivalent to not more than ₹ 10.00 Lakhs and two-thirds of the Non-Institutional Portion will be available for allocation to Bidders with an application size of more than ₹ 10.00 Lakhs and under-subscription in either of these two sub-categories of Non-Institutional Portion may be allocated to Bidders in the other sub-category of Non-Institutional Portion. Subject to the availability of Equity Shares in the Non – Institutional investors category, the allotment to each Non-Institutional Investors shall not be less than the minimum application size in Non-Institutional Category and the remaining available Equity Shares, if any, shall be allocated on a proportionate basis in accordance with the conditions specified in this regard in Schedule XIII of the SEBI (ICDR) (Amendment) Regulations, 2025. Not more than 50% of the Net Issue shall be allotted to QIBs, subject to valid Bids being received at or above the Issue Price.*

3. *In the event that a Bid is submitted in joint names, the relevant Bidders should ensure that the depository account is also held in the same joint names and the names are in the same sequence in which they appearing the Bid cum Application Form. The Bid cum Application Form should contain only the name of the First Bidder whose name should also appear as the first holder of the beneficiary account held in joint names. The signature of only such First Bidder would be required in the Bid cum Application Form and such First Bidder would be deemed to have signed on behalf of the joint holders. Our Company reserves the right to reject, in its absolute discretion, all or any multiple Bids in any or all categories.*

4. *Full Bid Amount was payable by the Anchor Investors at the time of submission of the Anchor Investor Application Forms provided that any difference between the Anchor Investor Allocation Price and the Anchor Investor Issue Price shall be payable by the Anchor Investor pay-in date as indicated in the Confirmation of Allotment Note.*

5. *Bids by FPIs with certain structures as described under Issue Procedure and having the same PAN were collated and identified as a single Bid in the Bidding process. The Equity Shares Allocated and Allotted to such successful Bidders (with the same PAN) have been proportionately distributed.*

SEBI through the notification no. SEBI/LAD-NRO/GN/2025/233 - SEBI ICDR (Amendment) Regulations, 2025 dated March 03, 2025 effective from the date of their publication in official gazette, has prescribed the allocation to each Individual Investors which shall not be less than minimum application size applied by such individual investors and allotment to Non- Institutional Investors shall be more than two lots, subject to availability of Equity Shares in the Non-Institutional Portion and the remaining available Equity Shares, if any, shall be allocated on a proportionate basis. *For further details, see chapter titled "Terms of the Issue" on page no. 313 of this Draft Red Herring Prospectus.*

Bidders will be required to confirm and will be deemed to have represented to our Company, the Underwriters, their respective directors, officers, agents, affiliates and representatives that they are eligible under applicable law, rules, regulations, guidelines and approvals to acquire the Equity Shares.

In case of any revision in the Price Band, the Bid/ Issue Period shall be extended for at least three additional Working Days after such revision of the Price Band, subject to the total Bid/ Issue Period not exceeding 10 Working Days. Any revision in the Price Band, and the revised Bid/ Issue Period, if applicable, shall be widely disseminated by notification to the Stock Exchanges by issuing a public announcement and also by indicating the change on the websites of the BRLM and at the terminals of the members of the Syndicate.

In case of discrepancy in the data entered in the electronic book vis-à-vis the data contained in the physical Bid cum Application Form for a particular Bidder, the details as per the Bid file received from the Stock Exchanges may be taken as the final data for the purpose of Allotment.

(The rest of the page is intentionally left blank)

ISSUE PROCEDURE

All Bidders should read the General Information Document for investing in public issues prepared and issued in accordance with the circular no. SEBI/HO/CFD/DIL1/CIR/P/2020/37 dated March 17, 2020 issued by SEBI and the UPI Circulars (the "General Information Document") which highlights the key rules, processes and procedures applicable to public issues in general in accordance with the provisions of the Companies Act, the SCRA, the SCRR and the SEBI ICDR Regulations which is part of the abridged prospectus accompanying Bid cum Application Form. The General Information Document is available on the website of the Stock Exchange and the Book Running Lead Manager. Please refer to the relevant provisions of the General Information Document which are applicable to the issue especially in relation to the process for Bids by the UPI Bidders. The investors should note that the details and process provided in the General Information Document should be read along with this section.

Additionally, all Bidders may refer to the General Information Document for information in relation to (i) category of investors eligible to participate in the issue; (ii) maximum and minimum Bid size; (iii) price discovery and allocation; (iv) payment instructions for ASBA Bidders; (v) issuance of Confirmation of Allocation Note ("CAN") and Allotment in the issue; (vi) general instructions (limited to instructions for completing the Bid cum Application Form); (vii) designated date; (viii) disposal of applications; (ix) submission of Bid cum Application Form; (x) other instructions (limited to joint bids in cases of individual, multiple bids and instances when an application would be rejected on technical grounds); (xi) applicable provisions of the Companies Act relating to punishment for fictitious applications; (xii) mode of making refunds; and (xiii) interest in case of delay in Allotment or refund.

In compliance with SEBI notification no. SEBI/LAD-NRO/GN/2025/233 - SEBI ICDR (Amendment) Regulations, 2025 dated March 03, 2025, our Company shall ensure that the minimum application size shall be two lots per application: "Provided that the minimum application size shall be above ₹ 2 lakhs."

SEBI through the UPI Circulars has proposed to introduce an alternate payment mechanism using Unified Payments Interface ("UPI") and consequent reduction in timelines for listing in a phased manner. UPI has been introduced in a phased manner as a payment mechanism with the ASBA for applications by Individual Investors through intermediaries from January 01, 2019. The UPI Mechanism for Individual Investors applying through Designated Intermediaries, in phase I, was effective along with the prior process and existing timeline of T+6 days ("UPI Phase I"), until June 30, 2019. Subsequently, for bids by Individual Investors through Designated Intermediaries, the process of physical movement of forms from Designated Intermediaries to SCSBs for blocking of funds has been discontinued and only the UPI Mechanism with existing timeline of T+6 days was applicable until further notice pursuant to SEBI circular SEBI/HO/CFD/DIL2/CIR/P/2020/50 dated March 30, 2020, ("UPI Phase II"). Thereafter, the final reduced timeline of T+3 days for the UPI Mechanism for bids by UPI Bidders ("UPI Phase III") and modalities of the implementation of UPI Phase III was notified by SEBI vide its circular no. SEBI/HO/CFD/TPD1/CIR/P/2023/140 dated August 09, 2023, and made effective on a voluntary basis for all issues opening on or after September 01, 2023, and on a mandatory basis for all issues opening on or after December 01, 2023 ("T+3 Notification"). Accordingly, the Issue will be undertaken pursuant to the processes and procedures under UPI Phase III on a mandatory basis, subject to any circulars, clarification or notification issued by the SEBI pursuant to the T+3 Notification.

Further, pursuant to SEBI master circular bearing reference no. SEBI/HO/MIRSD/POD-1/P/CIR/2024/37 dated May 7, 2024 ("SEBI RTA Master Circular") and circular (SEBI/HO/CFD/DIL2/P/CIR/2022/75) dated May 30, 2022, has introduced certain additional measures for streamlining the process of initial public offers and redressing investor grievances. The provisions of these circulars are deemed to form part of this Draft Red Herring Prospectus. Furthermore, pursuant to circular (SEBI/HO/CFD/DIL2/P/CIR/P/2022/45) dated April 05, 2022, all individual bidders in initial public offerings whose Application sizes are up to ₹500,000 shall use the UPI Mechanism for submitting their bids. Additionally, pursuant to circular (SEBI/HO/CFD/DIL2/P/CIR/2022/75) dated May 30, 2022, applications made using the ASBA facility in initial public offerings shall be processed only after application monies are blocked in the bank accounts of investors (all categories). The Book Running Lead Manager shall be the nodal entity for any issues arising out of public issuance process.

In terms of SEBI ICDR Regulations, the timelines and processes mentioned in SEBI circular no. SEBI/HO/CFD/TPD1/CIR/P/2023/140 dated August 9, 2023, shall continue to form part of the agreements being signed between the intermediaries involved in the public issuance process and Book Running Lead Manager shall continue to coordinate with intermediaries involved in the said process.

In case of (i) any delay in unblocking of amounts in the ASBA Accounts (including amounts blocked through the UPI Mechanism) for cancelled/ withdrawn/ deleted ASBA Forms, the Bidder will be compensated at a uniform rate of ₹100 per day or 15% per annum of the Bid amount, whichever is higher, from the date on which the request for cancellation/ withdrawal/ deletion is placed in the Stock Exchanges platform up to the date on which the amounts are unblocked; (ii) any blocking of multiple amounts for the same ASBA Form (for amounts blocked through the UPI Mechanism), the Bidder will be compensated at a uniform rate ₹100 per day or 15% per annum of the total cumulative blocked amount, except the original bid amount, whichever is higher from the date on which such multiple amounts were blocked up to the date of actual unblock; (iii) any blocking of amounts more than the application amount, the Bidder will be compensated at a uniform rate of ₹100 per day or 15% per annum of the difference in amount, whichever is higher from the date on which such excess amounts were blocked up to the date of actual unblock; (iv) any delay in unblocking of non-allotted/ partially allotted bid, exceeding two Working Days from the Issue Closing Date, the Bidder will be compensated at a uniform rate of ₹100 per day or 15% per annum of the bid amount, whichever is higher for the entire duration of delay exceeding two Working Days from the Issue Closing Date, by the SCSB responsible for causing such delay in unblocking. The Book Running Lead Manager will be liable to compensate the bidder at a uniform rate of ₹100 per day or 15% per annum of the bid amount, whichever is higher from the date of receipt of the Investor grievance up to the date on which the blocked amounts are unblocked. The Bidder will be compensated in the manner specified in the SEBI master circular no. HO/49/14/14(2)2026-CFD-POD2/I/4518/2026 dated February 09, 2026.

Our Company, Promoters and the Book Running Lead Manager do not accept any responsibility for the completeness and accuracy of the information stated in this section and the General Information Document and are not liable for any amendment, modification or change in the applicable law which may occur after the date of this Draft Red Herring Prospectus. Bidders are advised to make their independent investigations and ensure that their Bids are submitted in accordance with applicable laws and do not exceed the investment limits or maximum number of the Equity Shares that can be held by them under applicable law or as specified in this Draft Red Herring Prospectus, Red Herring Prospectus or the Prospectus.

Further, our Company and the Book Running Lead Manager are not liable for any adverse occurrences consequent to the implementation of the UPI Mechanism for application in this Issue. This section applies to all the Bidders.

BOOK BUILDING ISSUE PROCEDURE

In terms of Rule 19(2)(b) of the Securities Contracts (Regulation) Rules, 1957, as amended (the "SCRR") read with Regulation 252 of SEBI (ICDR) Regulations, 2018, the Issue is being made for at least 25% of the post-Issue paid-up Equity Share capital of our Company. The Issue is being made under Regulation 229(2) of Chapter IX of SEBI (Issue of Capital and Disclosure Requirements) Regulations, 2018 via Book Building Issue method. In terms of Regulation 253(1)&(2) of Chapter IX of SEBI (Issue of Capital and Disclosure Requirements) Regulations, 2018, wherein not more than 50% of the Net Issue shall be allocated on a proportionate basis to QIBs, provided that our Company may, in consultation with the Book Running Lead Manager, allocate up to 60% of the QIB Portion to Anchor Investors on a discretionary basis in accordance with the SEBI ICDR Regulations, of which 40% of the Anchor Investor Portion shall be reserved as: 33.33% for domestic Mutual Funds and 6.67% for life insurance companies and pension funds, subject to valid Bids being received at or above the Anchor Investors Allocation Price. In the event of under-subscription or non-allocation in the Anchor Investor Portion, the balance Equity Shares shall be added to the QIB Portion. Further, 5% of the QIB Portion (excluding the Anchor Investor Portion) shall be available for allocation on a proportionate basis only to Mutual Funds and the remainder of the QIB Portion shall be available for allocation on a proportionate basis to all QIBs (other than Anchor Investors), including Mutual Funds, subject to valid Bids being received at or above the Issue Price. Further, not less than 35% of the Net Issue shall be available for allocation to Individual Bidders who applies for minimum application size and Not less than 15% of the Net Issue shall be available for allocation to Non-Institutional Investors of which one-third of the Non-Institutional Portion will be available for allocation to Bidders with an application size of more than two lots and up to such lots as equivalent to not more than ₹ 10.00 Lakhs and two-thirds of the Non-Institutional Portion will be avai-lable for allocation to Bidders with an application size of more than ₹ 10.00 Lakhs and undersubscription in either of these two sub-categories of Non-Institutional Portion may be allocated to Bidders in the other sub-category of Non-Institutional Portion. Subject to the availability of Equity Shares in the Non – Institutional Investors Category, the allotment to each Non-Institutional Investors shall not be less than the minimum application size in Non- Institutional Category and the remaining available Equity Shares, if any, shall be allocated on a proportionate basis in accordance with the conditions specified in this regard in Schedule XIII of the SEBI (ICDR) Regulations, 2018.

Subject to valid Bids being received at or above the Issue Price, undersubscription, if any, in any category, except the QIB Portion, would be allowed to be met with spill-over from any other category or a combination of categories of Bidders at the discretion of our Company in consultation with the BRLM, and the Designated Stock Exchange. However, under-subscription, if any, in the QIB Portion will not be allowed to be met with spillover from other category or a combination of categories.

Bidders are required to submit their applications to the Bidding Centres i.e. SCSB or Registered Brokers of Stock Exchanges or Registered Registrar to the Issue and Share Transfer Agents (RTAs) or Depository Participants (DPs) registered with SEBI.

Investors should note that according to section 29(1) of the Companies Act, 2013, allotment of Equity Shares to all successful bidders will only be in the dematerialised form. The Bid cum Application Forms which do not have the details of the Bidder's depository account including DP ID, PAN and Beneficiary Account Number shall be treated as incomplete and rejected. In case DP ID, Client ID and PAN mentioned in the Bid cum Application Form and entered the electronic system of the stock exchange, do not match with the DP ID, Client ID and PAN available in the depository database, the application is liable to be rejected. Bidders will not have the option of getting allotment of the Equity Shares in physical form. The Equity Shares on allotment shall be traded only in the dematerialised segment of the Stock Exchange.

AVAILABILITY OF DRAFT RED HERRING PROSPECTUS, RED HERRING PROSPECTUS, PROSPECTUS AND BID CUM APPLICATION FORMS

Copies of the Bid cum Application Form (other than for Anchor Investors) and the abridged prospectus will be available at the Registered Office of our Company, the Registered Office of the Book Running Lead Manager to the Issue, all the offices of the Registrar to the Issue.

An electronic copy of the Bid cum Application Form will also be available for download on the websites of SCSBs (via Internet Banking) and the Stock exchange (NSE) i.e. www.nseindia.com, at least one day prior to the Bid/Issue Opening Date.

Copies of the Anchor Investor Application Form will be available at the offices of the BRLM.

Applicants shall only use the specified Application Form for the purpose of making an Application in terms of the Red Herring Prospectus. All the applicants shall have to apply only through the ASBA process. ASBA Applicants shall submit an Application Form either in physical or electronic form to the SCSB 's authorizing blocking of funds that are available in the bank account specified in the Applicants shall only use the specified Application Form for the purpose of making an Application in terms of the Red Herring Prospectus. The Application Form shall contain space for indicating number of specified securities subscribed for in demat form.

PHASED IMPLEMENTATION OF UNIFIED PAYMENTS INTERFACE (UPI)

SEBI has issued various UPI Circulars in relation to streamlining the process of public issue of inter alia, equity shares. Pursuant to the SEBI circular bearing number SEBI/HO/CFD/DIL2/CIR/P/2018/138 dated November 1, 2018, SEBI circular bearing number SEBI/HO/CFD/DIL2/CIR/P/2019/50 dated April 3, 2019, SEBI circular bearing number SEBI/HO/CFD/DIL2/CIR/P/2019/76 dated June 28, 2019, SEBI circular bearing number SEBI/HO/CFD/DIL2/CIR/P/2019/85 dated July 26, 2019, SEBI circular bearing number SEBI/HO/CFD/DIL2/CIR/P/2020/50 dated March 30, 2020 ("**Previous UPI Circulars**") and the UPI Circulars, the UPI Mechanism has been introduced in a phased manner as a payment mechanism (in addition to mechanism of blocking funds in the account maintained with SCSBs under ASBA) for applications by UPI Bidder through Designated Intermediaries with the objective to reduce the time duration from public issue closure to listing from six Working Days to up to three Working Days. Considering the time required for making necessary changes to the systems and to ensure complete and smooth transition to the UPI payment mechanism, the UPI Circulars and the Previous UPI Circulars have introduced the UPI Mechanism in three phases in the following manner:

Phase I: This phase was applicable from January 01, 2019, until March 31, 2019, or floating of five main board public issues, whichever was later. Subsequently, the timeline for implementation of Phase I was extended till June 30, 2019. Under this phase, an Individual Investor had the option to submit the ASBA Form with any of

the Designated Intermediary and use his/her UPI ID for the purpose of blocking of funds. The time duration from public issue closure to listing continued to be six Working Days.

Phase II: This phase has become applicable from July 01, 2019, and the continuation of this phase has been extended until March 31, 2020. Under this phase, submission of the ASBA Form by Individual Investors through Designated Intermediaries (other than SCSBs) to SCSBs for blocking of funds has been discontinued and is replaced by the UPI Mechanism. However, the time duration from public issue closure to listing continues to be six Working Days during this phase. Further, pursuant to SEBI circular dated March 30, 2020, this phase has been extended till further notice.

Phase III/T+3: This phase has become applicable on a voluntary basis for all issues opening on or after September 01, 2023 and on a mandatory basis for all issues opening on or after December 01, 2023 vide SEBI circular bearing number SEBI/HO/CFD/TPD1/CIR/P/2023/140 dated August 09, 2023 ("T+3 Notification"). In this phase, the time duration from public issue closure to listing has been reduced to three Working Days. The Issue shall be undertaken pursuant to the processes and procedures as notified in the T+3 Notification as applicable, subject to any circulars, clarification or notification issued by SEBI from time to time, including any circular, clarification or notification which may be issued by SEBI.

The Issue is being made under Phase III of the UPI (on a mandatory basis).

Individual Investors bidding under the Non-Institutional Portion bidding for more than ₹ 200,000 and up to ₹ 500,000, using the UPI Mechanism, shall provide their UPI ID in the Bid-cum-Application Form for Bidding through Syndicate, sub-syndicate members, Registered Brokers, RTAs or CDPs, or online using the facility of linked online trading, demat and bank account (3 in 1 type accounts), provided by certain brokers.

The processing fees for applications made by UPI Bidder using the UPI Mechanism may be released to the remitter banks (SCSBs) only after such banks provide a written confirmation on compliance with SEBI circular no. SEBI/HO/CFD/DIL2/P/CIR/2021/570 dated June 2, 2021 read with SEBI circular no. SEBI/HO/CFD/DIL2/CIR/P/2021/2480/1/M dated March 16, 2021 and SEBI circular no. SEBI/HO/CFD/DIL2/CIR/P/2022/51 dated April 20, 2022. NPCI vide circular reference no. NPCI/UPI/OC No. 127/ 2021-22 dated December 09, 2021, inter alia, has enhanced the per transaction limit in UPI from more than ₹2.00 Lakhs to ₹5.00 lakhs for UPI based ASBA in initial public issue.

All SCSBs offering facility of making application in public issues shall also provide facility to make application using the UPI Mechanism. Our Company will be required to appoint one of the SCSBs as a sponsor bank to act as a conduit between the Stock Exchanges and NPCI in order to facilitate collection of requests and / or payment instructions of the UPI Bidders into the UPI Mechanism.

Pursuant to SEBI circular no. SEBI/HO/CFD/DIL2/CIR/P/2021/2480/1/M dated March 16, 2021 issued by SEBI, as amended by the SEBI circular no. SEBI/HO/CFD/DIL2/P/CIR/2021/570 dated June 2, 2021 and SEBI circular no. SEBI/HO/CFD/DIL2/CIR/P/2022/51 dated April 20, 2022 (the "UPI Streamlining Circular"), SEBI has set out specific requirements for redressal of investor grievances for applications that have been made through the UPI Mechanism. The requirements of the UPI Circular include, appointment of a nodal officer by the SCSB and submission of their details to SEBI, the requirement for SCSBs to send SMS alerts for the blocking and unblocking of UPI mandates, the requirement for the Registrar to submit details of cancelled, withdrawn or deleted applications, and the requirement for the bank accounts of unsuccessful Bidders to be unblocked no later than one Working Day from the date on which the Basis of Allotment is finalised. Failure to unblock the accounts within the timeline would result in the SCSBs being penalised under the relevant securities law. Additionally, if there is any delay in the redressal of investors' complaints, the relevant SCSB as well as the Book Running Lead Manager will be required to compensate the concerned investor. Further, in terms of the UPI Circulars, the payment of processing fees to the SCSBs shall be undertaken pursuant to an application made by the SCSBs to the BRLMs, and such application shall be made only after (i) unblocking of application amounts for each application received by the SCSB has been fully completed, and (ii) applicable compensation relating to investor complaints has been paid by the SCSB -+in compliance with the SEBI RTA Master Circular in a format as prescribed by SEBI, from time to time, and such payment of processing fees to the SCSBs shall be made in compliance with circulars prescribed by SEBI and applicable law.

For further details, refer to the General Information Document available on the websites of the Stock Exchange and the Book Running Lead Manager.

ELECTRONIC REGISTRATION OF BIDS

a. The Designated Intermediary shall register the Applications using the online facilities of the Stock Exchanges. The Designated Intermediaries could also set up facilities for off-line electronic registration of Applications, subject to the condition that they would subsequently upload the off-line data file into the online facilities on a regular basis before the closure of the issue.

b. On the Issue Closing Date, the Designated Intermediaries may upload the Bids till such time as were permitted by the Stock Exchanges and as disclosed in this Prospectus.

c. Only Applications that are uploaded on the Stock Exchanges Platform would be considered for allocation/Allotment. The Designated Intermediaries shall be given till 1:00 pm on the next Working Day following the issue Closing Date to modify select fields uploaded in the Stock Exchanges' Platform during the Issue Period after which the Stock Exchange(s) would send the Application information to the Registrar to the Issue for further processing.

d. The Designated Intermediaries shall be responsible for any acts, mistakes or errors or omissions and commissions in relation to:

- the applications accepted by them
- the applications uploaded by them
- the applications accepted but not uploaded by them or
- With respect to applications by Applicants, applications accepted and uploaded by any Designated Intermediary other than SCSBs, the Application Form along with relevant schedules shall be sent to the SCSBs or the Designated Branch of the relevant SCSBs for blocking of funds and they will be responsible for blocking the necessary amounts in the ASBA Accounts. In case of Application accepted and Uploaded by SCSBs, the SCSBs or the Designated Branch of the relevant SCSBs will be responsible for blocking the necessary amounts in the ASBA Accounts.

e. Neither the Lead Manager nor our Company nor the Registrar to the Issue, shall be responsible for any acts, mistakes or errors or omission and commissions in relation to:

- The applications accepted by any Designated Intermediaries
- The applications uploaded by any Designated Intermediaries or
- The applications accepted but not uploaded by any Designated Intermediaries

f. The Stock Exchange will Issue an electronic facility for registering applications for the Issue. This facility will be available at the terminals of Designated Intermediaries and their authorized agents during the Issue Period. The Designated Branches or agents of Designated Intermediaries can also set up facilities for offline electronic registration of applications subject to the condition that they will subsequently upload the off-line data file into the online facilities on a regular basis. On the Issue Closing Date, the Designated Intermediaries shall upload the applications till such time as may be permitted by the Stock Exchange. This information will be available with the Lead Manager on a regular basis.

g. With respect to applications by Applicants, at the time of registering such applications, the Syndicate Bankers, DPs and RTAs shall forward a Schedule as per format given below along with the Application Forms to Designated Branches of the SCSBs for blocking of funds:

S. No.	Details*
1	Symbol
2	Intermediary Code
3	Location Code
4	Application No
5	Category
6	PAN
7	DP ID
8	Client ID
9	Quantity
10	Amount

*Stock Exchanges shall uniformly prescribe character length for each of the above-mentioned fields

h. With respect to applications by Applicants, at the time of registering such applications, the Designated Intermediaries shall enter the following information pertaining to the Applicants onto the online system:

- Name of the Applicant;
- IPO Name:
- Application Form Number;
- Investor Category;
- PAN (of First Applicant, if more than one Applicant);
- DP ID of the demat account of the Applicant;
- Client Identification Number of the demat account of the Applicant;
- Number of Equity Shares Applied for;
- Bank Account details;
- Locations of the Banker to the Issue or Designated Branch, as applicable, and bank code of the SCSB branch where the ASBA Account is maintained; and
- Bank account number.

i. In case of submission of the Application by an Applicant through the Electronic Mode, the Applicants shall complete the above- mentioned details and mention the bank account number, except the Electronic ASBA Bid Cum Application Form number which shall be system generated

j. The aforesaid Designated Intermediaries shall, at the time of receipt of application, give an acknowledgment to the investor, by giving the counter foil or specifying the application number to the investor, as a proof of having accepted the Bid Cum Application Form in physical as well as electronic mode. The registration of the Application by the Designated Intermediaries does not guarantee that the Equity Shares shall be allocated / allotted either by our Company.

k. Such acknowledgment will be non-negotiable and by itself will not create any obligation of any kind.

l. In case of Non-Individual Applicant and Individual Applicant, applications would not be rejected except on the technical grounds as mentioned in the Prospectus. The Designated Intermediaries shall have no right to reject applications, except on technical grounds.

m. The permission given by the Stock Exchanges to use their network and software of the Online IPO system should not in any way be deemed or construed to mean that the compliance with various statutory and other requirements by our Company and/or the BRLM are cleared or approved by the Stock Exchanges; nor does it in any manner warrant, certify or endorse the correctness or completeness of any of the compliance with the statutory and other requirements nor does it take any responsibility for the financial or other soundness of our company or our Promoter or our management or any scheme or project of our Company; nor does it in any manner warrant, certify or endorse the correctness or completeness of any of the contents of this Draft Red Herring Prospectus, nor does it warrant that the Equity Shares will be listed or will continue to be listed on the Stock Exchanges.

n. The Designated Intermediaries will be given time till 1.00 p.m. on the next working day after the Issue Closing Date to verify the DP ID and Client ID uploaded in the online IPO system during the Issue Period, after which the Registrar to the Issue will receive this data from the Stock Exchange and will validate the electronic application details with Depository's records. In case no corresponding record is available with Depositories, which matches the three parameters, namely DP ID, Client ID and PAN, then such applications are liable to be rejected.

o. The SCSBs shall be given one day after the Issue Closing Date to send confirmation of Funds blocked (Final certificate) to the Registrar to the Issue.

p. The details uploaded in the online IPO system shall be considered as final and Allotment will be based on such details for applications.

(The rest of the page is intentionally left blank)

BID CUM APPLICATION FORMS

Copies of the Bid cum Application Form (other than for Anchor Investors) and the abridged prospectus will be available at the Registered Office of our Company, the Registered Office of the Book Running Lead Manager to the Issue, all the offices of the Registrar to the Issue. An electronic copy of the Bid cum Application Form will also be available for download on the website of the of the Stock exchange (NSE) i.e. www.nseindia.com, at least one day prior to the Bid/Issue Opening Date.

Copies of the Anchor Investor Application Form will be available at the offices of the BRLM.

All Bidders (other than Anchor Investors) shall mandatorily participate in the Issue only through the ASBA process, which shall include the UPI Mechanism in case of UPI Bidders. ASBA Bidders must provide the bank account details or valid UPI ID in the relevant space provided in the ASBA Form and authorisation to block funds in their respective ASBA Accounts. The ASBA Forms that do not contain such details will be rejected. Further, Individual Investors submitting application form using UPI shall mention the UPI of his/her own Bank account in the application form in the relevant space. The Application Forms that do not contain Bidder's bank account details or UPI of own Bank Account, as the case may be, are liable to be rejected. All the investors are also required to ensure that the ASBA Account had sufficient credit balance as an amount equivalent to the full Bid Amount which to be blocked by the SCSB. The application made by a Bidder shall only be processed after the Bid amount is blocked in the ASBA account of the Bidder pursuant to SEBI circular number SEBI/HO/CFD/DIL2/P/CIR/2022/75 dated May 30, 2022, which shall be effective from September 1, 2022. In order to ensure timely information to investors, SCSBs are required to send SMS alerts to investors intimating them about Bid Amounts blocked/ unblocked.

Applications made by the Individual Investors using third party bank account or using third party linked bank account UPI ID were liable for rejection.

Anchor Investors are not permitted to participate in the Issue through the ASBA process.

ASBA Bidders shall ensure that the Bids made on Bid cum Application Forms bearing the stamp of the relevant Designated Intermediary, submitted at the relevant Bidding Centres only (except in case of electronic Bid cum Application Forms) and the Bid cum Application Forms not bearing such specified stamp are liable to be rejected. Since as on date Phase III of the UPI Circulars is mandatorily applicable, the Issue is made under Phase III of the UPI Circulars, ASBA Bidders may submit the ASBA Form in the manner below;

a. Individual Investors (other than the UPI Bidders using UPI Mechanism) may submit their ASBA Forms with SCSBs (physically or online, as applicable), or online using the facility of linked online trading, demat and bank account (3 in 1 type accounts), provided by certain brokers.
b. UPI Bidders using the UPI Mechanism, may submit their ASBA Forms with the Syndicate, sub-syndicate members, Registered Brokers, RTAs or CDPs, or online using the facility of linked online trading, demat and bank account (3 in 1 type accounts), provided by certain brokers.
c. QIBs and NIBs may submit their ASBA Forms with SCSBs, Syndicate, sub-syndicate members, Registered Brokers, RTAs or CDPs

The prescribed colour of the Bid cum Application Form for various categories is as follows:

Category	Colour of Bid cum Application Form*
Resident Indians, including resident QIBs, Non-Institutional Investors, Individual Investors and Eligible NRIs applying on a non-repatriation basis	White
Non-Residents including Eligible NRIs, FII's, FVCIs etc. applying on a repatriation basis	Blue
Anchor Investor**	White

**Excluding electronic Bid Cum Application Forms downloaded by the* Bidders.
***Bid cum Application Forms for Anchor Investors will be made available at the office of the Book Running Lead Manager. Electronic Bid cum Application forms will also be available for download on the website of NSE (www.nseindia.com).*

Application Forms are available on the website of the Stock Exchange (www.nseindia.com)

Designated Intermediaries (other than SCSBs) after accepting Bid cum Application Form submitted by Individual Investor (without using UPI for payment), NIIs and QIBs shall capture and upload the relevant details in the electronic bidding system of stock exchange(s) and shall submit/deliver the Bid cum Application Forms to respective SCSBs where the Bidders has a bank account and shall not submit it to any non-SCSB Bank or any escrow Bank.

Further, for applications submitted to designated intermediaries (other than SCSBs), with use of UPI for payment, after accepting the Bid cum Application Form, respective intermediary shall capture and upload the relevant application details, including UPI ID, in the electronic bidding system of stock exchange(s). Bidders shall only use the specified Bid cum Application Form for making an Application in terms of the Draft Red Herring Prospectus. Stock Exchange shall validate the electronic bids with the records of the CDP for DP ID / Client ID and PAN, on a real time basis and bring inconsistencies to the notice of the relevant Designated Intermediaries, for rectification and re-submission within the time specified by Stock Exchange. Stock Exchange shall allow modification of either DP ID / Client ID or PAN ID, bank code and location code in the Application details already uploaded.

The Bid Form shall contain information about the Bidder and the price and the number of Equity Shares that the Bidders wish to apply for. Bid Forms downloaded and printed from the websites of the Stock Exchange shall bear a system generated unique application number. Bidders are required to ensure that the ASBA Account has sufficient credit balance as an amount equivalent to the full Application Amount can be blocked by the SCSB or Sponsor Bank at the time of submitting the Application.

For individual investors using UPI Mechanism, the Stock Exchange shall share the Application details (including UPI ID) with Sponsor Bank on a continuous basis to enable the Sponsor Bank to initiate UPI Mandate Request to individual investors for blocking of funds. The Sponsor Bank shall initiate request for blocking of funds through NPCI to individual investors, who shall accept the UPI Mandate Request for blocking of funds on their respective mobile applications associated with UPI ID linked bank account. The NPCI shall maintain an audit trail for every bid entered in the Stock Exchange applying platform, and the liability to compensate individual investors (using the UPI Mechanism) in case of failed transactions shall be with the concerned entity (i.e., the Sponsor Bank, NPCI or the Bankers to the Issue) at whose end the lifecycle of the transaction has come to a halt. The NPCI shall share the audit trail of all disputed transactions / investor complaints to the Sponsor Banks and the Bankers to the Issue. The BRLM shall also be required to obtain the audit trail from the Sponsor Banks and the Bankers to the Issue for analysing the same and fixing liability. For ensuring timely information to investors, SCSBs shall send SMS alerts as specified in SEBI circular no. SEBI/HO/CFD/DIL2/CIR/P/2021/2480/1/M dated March 16, 2021, as amended pursuant to SEBI circular no. SEBI/HO/CFD/DIL2/P/CIR/2021/570 dated June 2, 2021.

The Sponsor Bank(s) shall host a web portal for intermediaries (closed user group) from the date of Bid/ Issue Opening Date until the date of listing of the Equity Shares with details of statistics of mandate blocks/unblocks, performance of apps and UPI handles, down-time/network latency (if any) across intermediaries and any such processes having an impact/bearing on the Issue Bidding process.

The processing fees for applications made by the UPI Bidders using the UPI Mechanism may be released to the SCSBs only after such SCSBs provide a written confirmation in compliance with the SEBI RTA Master Circular, in a format prescribed by SEBI or applicable law.

SUBMISSION AND ACCEPTANCE OF BID CUM APPLICATION FORMS

Bidders shall only use the specified Bid cum Application Form for the purpose of making an application in terms of the Draft Red Herring Prospectus, Red Herring Prospectus and Prospectus. The Bid cum Application Form shall contain information about the Bidder and the price and the number of Equity Shares that the Bidders wish to apply for. Bid cum Application Forms downloaded and printed from the websites of the Stock Exchange shall bear a system generated unique application number. Bidders are required to ensure that the ASBA Account or UPI linked Bank Account has sufficient credit balance as an amount equivalent to the full Application Amount can be blocked by the SCSB or Sponsor Bank at the time of submitting the Application.

It is clarified that Bids not uploaded in the book, would be rejected. In case of discrepancy in the data entered in the electronic book vis-à-vis the data contained in the physical Bid form, for a particular bidder, the details as per physical bid cum application form of that Bidder may be taken as the final data for the purpose of allotment. Bids will be accepted only on Working Days, i.e., Monday to Friday (excluding any public holiday).

Bidders are required to submit their bids only through any of the following Designated Intermediaries:

i. A SCSB, with whom the bank account to be blocked, is maintained
ii. A syndicate member (or sub-syndicate member)
iii. A stock broker registered with a recognised stock exchange (and whose name is mentioned on the website of the stock exchange as eligible for this activity) ("broker")
iv. A depository participant ("DP") (Whose name is mentioned on the website of the stock exchange as eligible for this activity)
v. A registrar to an issuer and share transfer agent ("RTA") (Whose name is mentioned on the website of the stock exchange as eligible for this activity)

Individual Investors submitting application with any of the entities at (ii) to (v) above (hereinafter referred as "Intermediaries"), and intending to use UPI, shall also enter their UPI ID in the Bid Cum Application Form.

The aforesaid intermediaries shall, at the time of receipt of application, give an acknowledgement to investor, by giving the counter foil or specifying the application number to the investor, as a proof of having accepted the Bid cum Application form, in physical or electronic mode, respectively.

It is clarified that Individual Investors may continue to submit physical ASBA Forms with SCSBs without using the UPI Mechanism.

The upload of the details in the electronic bidding system of stock exchange will be done by:

For Applications submitted by investors to SCSB:	After accepting the form submitted by Individual Investors (without using UPI for payment), NIIs and QIBs, SCSB shall capture and upload the relevant details in the electronic bidding system as specified by the stock exchange(s) and may begin blocking funds available in the bank account specified in the form, to the extent of the application money specified.
For applications submitted by investors to intermediaries other than SCSBs:	After accepting the application form, respective intermediary shall capture and upload the relevant details in the electronic bidding system of stock exchange. Post uploading, they shall forward a schedule as per prescribed format along with the application forms to designated branches of the respective SCSBs for blocking of funds within one day of closure of Issue.
For applications submitted by investors to intermediaries other than SCSBs with use of UPI for payment	After accepting the application form, respective intermediary shall capture and upload the relevant application details, including UPI ID, in the electronic bidding system of stock exchange(s). Stock Exchange shall share application details including the UPI ID with Sponsor Bank on a continuous basis through API integration, to enable Sponsor Bank to initiate mandate request on investors for blocking of funds. Sponsor Bank shall initiate request for blocking of funds through NPCI to investor. Investor shall accept mandate request for blocking of funds, on his / her mobile application, associated with UPI ID linked bank account.

Stock exchange(s) shall validate the electronic bid details with depository's records for DP ID/Client ID and PAN Combination, on a real time basis through API Integration and bring the inconsistencies to the notice of intermediaries concerned, for rectification and re-submission within the time specified by stock exchange.

Stock exchange(s) shall allow modification of selected fields viz. DP ID/Client ID or Pan ID (Either DP ID/Client ID or Pan ID can be modified but not BOTH), Bank code and Location code, in the bid details already uploaded.

Upon completion and submission of the Bid cum Application Form to Application Collecting intermediaries, the Bidders are deemed to have authorised our Company to make the necessary changes in the Prospectus, without prior or subsequent notice of such changes to the Bidders. Bidders shall submit a Bid cum Application Form either in physical or electronic form to the SCSB's authorising blocking of funds that are available in the bank account specified in the Bid cum Application Form used by ASBA Bidders. Designated

Intermediaries (other than SCSBs) shall submit/deliver the ASBA Forms/ Bid Cum Application Forms to the respective SCSB, where the Bidder has a bank account and shall not submit it to any non-SCSB bank or any Escrow Collection Bank.

WHO CAN BID?

As per the existing RBI regulations, OCBs are not eligible to participate in this Issue. The RBI has however clarified in its circular, A.P. (DIR Series) Circular No. 44, dated December 8, 2003 that OCBs which are incorporated and are not under the adverse notice of the RBI are permitted to undertake fresh investments as incorporated non-resident entities in terms of Regulation 5(1) of RBI Notification No.20/2000-RB dated May 03, 2000 under FDI Scheme with the prior approval of Government if the investment is through Government Route and with the prior approval of RBI if the investment is through Automatic Route on case to case basis. OCBs may invest in this Issue provided it obtains a prior approval from the RBI or prior approval from Government, as the case may be. On submission of such approval along with the Bid Cum Application Form, the OCB shall be eligible to be considered for share allocation.

Please note that, in accordance with the SEBI circular no. CIR/CFD/POLICYCELL/11/2015 dated November 10, 2015 and the SEBI ICDR Regulations, all the investors (Except Anchor investors) applying in a public issue shall use only ASBA facility for making payment. Further, pursuant to SEBI Circular No. SEBI/HO/CFD/DCR2/CIR/P/2019/133 dated November 08, 2019, Individual Investors applying in public Issue may use either ASBA process or UPI payment mechanism by providing UPI ID in the Application
Form which is linked from Bank Account of the investor.

Each Bidder should check whether it is eligible to apply under applicable law, rules, regulations, guidelines and policies. Furthermore, certain categories of Bidders, such as NRIs, FPIs and FVCIs may not be allowed to apply in the Issue or to hold Equity Shares, in excess of certain limits specified under applicable law.

Subject to the above, an illustrative list of Bidders is as follows:

a) Indian nationals' resident in India who are not incompetent to contract under the Indian Contract Act, 1872, as amended, in single or as a joint application and minors having valid demat account as per Demographic Details provided by the Depositories. Furthermore, based on the information provided by the Depositories, our Company shall have the right to accept the Applications belonging to an account for the benefit of minor (under guardianship);

b) Hindu Undivided Families or HUFs, in the individual name of the Karta. The Bidder should specify that the application is being made in the name of the HUF in the Bid cum Application Form as follows: "Name of Sole or First Bidder: XYZ Hindu Undivided Family applying through XYZ, where XYZ is the name of the Karta". Applications by HUFs would be considered at par with those from individuals;

c) Companies, Corporate Bodies and Societies registered under the applicable laws in India and authorized to invest in the Equity Shares under their respective constitutional and charter documents;

d) QIBs;

e) Mutual Funds registered with SEBI;

f) Eligible NRIs on a repatriation basis or on a non-repatriation basis, subject to applicable laws. NRIs other than Eligible NRIs are not eligible to participate in this Issue;

g) Indian Financial Institutions, Scheduled Commercial Banks, Regional Rural Banks, Co-Operative Banks (subject to RBI permission, and the SEBI Regulations and other laws, as applicable);

h) FIIs and sub-accounts of FIIs registered with SEBI, other than a sub-account which is a Foreign Corporate or a Foreign Individual under the QIB Portion;

i) Limited Liability Partnerships (LLPs) registered in India and authorized to invest in equity shares;

j) Sub-accounts of FIIs registered with SEBI, which are Foreign Corporate or Foreign Individuals only under the Non-Institutional Bidder's category;

k) Venture Capital Funds and Alternative Investment Fund (I) registered with SEBI;

l) State Industrial Development Corporations;

m) Foreign Venture Capital Investors registered with the SEBI;

n) Trusts/Societies registered under the Societies Registration Act, 1860, as amended, or under any other law relating to Trusts and who are authorized under their constitution to hold and invest in equity shares;

o) Scientific and/or Industrial Research Organizations authorized to invest in equity shares;

p) Insurance Companies registered with Insurance Regulatory and Development Authority, India;

q) Provident Funds who are authorized under their constitution to hold and invest in equity shares;

r) Pension Funds who are authorized under their constitution to hold and invest in equity shares;

s) National Investment Fund set up by Resolution no. F. No. 2/3/2005-DDII dated November 23, 2005 of Government of India published in the Gazette of India;

t) Insurance funds set up and managed by Army, Navy or Air Force of the Union of India;

u) Multilateral and Bilateral Development Financial Institution;

v) Eligible QFIs;

w) Insurance funds set up and managed by Army, Navy or Air Force of the Union of India;

x) Insurance funds set up and managed by the Department of Posts, India;

y) Any other person eligible to applying in this Issue, under the laws, rules, regulations, guidelines and policies applicable to them.

Bids not to be made by:

1. Minors (except under guardianship)
2. Partnership firms or their nominees
3. Foreign Nationals (except NRIs)
4. Overseas Corporate Bodies

The Equity Shares have not been and will not be registered, listed or otherwise qualified in any other jurisdiction outside India and may not be issued or sold and Bids may not be made by persons in any such jurisdiction, except in compliance with the applicable laws of such jurisdiction.

METHOD OF BIDDING PROCESS

Our Company in consultation with the BRLM will decide the Price Band and the minimum Bid lot size for the Issue and the same shall be advertised in two national newspapers (one each in English and Hindi) and in a regional newspaper, each with wide circulation at least two Working Days prior to the Bid/ Issue Opening Date.

The Designated Intermediaries shall accept Bids from the Bidders during the Bid/ Issue Period.

a. The Bid / Issue Period shall be for a minimum of three Working Days and shall not exceed 10 Working Days. The Bid/Issue Period may be extended, if required, by an additional three days, subject to the total Bid/ Issue Period not exceeding 10 Working Days. Any revision in the Price Band and the revised Bid/ Issue Period, if applicable, will be published in two national newspapers (one each in English and Hindi) and in a regional newspaper, each with wide circulation and also by indicating the change on the websites of the Book Running Lead Manager.

b. During the Bid/ Issue Period, Bidder, should approach the Designated Intermediaries to register their Bids. The Designated Intermediaries shall accept Bids from the Bidder in Specified Cities and it shall have the right to vet the Bids during the Bid/ Issue Period in accordance with the terms of the Red Herring Prospectus..

c. Each Bid cum Application Form will give the Bidder the choice to Bid for up to three optional prices (for details refer to the *paragraph titled "Bids at Different Price Levels and Revision of Bids" on page no. 340 of this Draft Red Herring Prospectus*) within the Price Band and specify the demand (i.e., the number of Equity Shares Bid for) in each option. The price and demand options submitted by the Bidder in the Bid cum Application Form will be treated as optional demands from the Bidder and will not be cumulated. After determination of the Issue Price, the maximum number of Equity Shares Bid for by a Bidder at or above the Issue Price will be considered for allocation/Allotment and the rest of the Bid(s), irrespective of the Bid Amount, will become automatically invalid.

d. The Bidder cannot Bid through another Bid cum Application Form after Bids through one Bid cum Application Form have been submitted to Designated Intermediaries. Submission of a second Bid cum Application Form to either the same or to another Designated Intermediaries will be treated as multiple Bid and is liable to be rejected either before entering the Bid into the electronic bidding system, or at any point of time prior to the allocation or Allotment of Equity Shares in this Issue. However, the Bidder can revise the Bid through the Revision Form.

e. Except in relation to the Bids received from the Anchor Investors, the Designated Intermediaries will enter each Bid option into the electronic bidding system as a separate Bid and generate a Transaction Registration Slip ("TRS"), for each price and demand option and give the same to the Bidder. Therefore, a Bidder can receive up to three TRSs for each Bid cum Application Form.

f. The Designated Intermediaries shall accept the Bids from the Anchor Investors during the Anchor Investor Bid/ Issue Period i.e. one Working Day prior to the Bid/ Issue Opening Date. Bids by QIBs under the Anchor Investor Portion and the QIB Portion shall not be considered as multiple Bids.

g. Along with the Bid cum Application Form, Anchor Investors will make payment in the manner described in the *heading "Payment into Escrow Account(s) for Anchor Investors" on page no. 362 of this Draft Red Herring Prospectus*.

h. Upon receipt of the Bid cum Application Form, submitted whether in physical or electronic mode, the Designated Branch of the SCSB shall verify if sufficient funds equal to the Bid Amount are available in the ASBA Account, as mentioned in the Bid cum Application Form prior to uploading such Bids with the Stock Exchange.

i. If sufficient funds are not available in the ASBA Account, the Designated Branch of the SCSB shall reject such Bids and shall not upload such Bids with the Stock Exchange.

j. If sufficient funds are available in the ASBA Account, the SCSB shall block an amount equivalent to the Bid Amount mentioned in the Bid cum Application Form and will enter each Bid option into the electronic bidding system as a separate Bid and generate a TRS for each price and demand option. The TRS shall be furnished to the ASBA Bidder on request.

k. The Bid Amount shall remain blocked in the aforesaid ASBA Account until finalization of the Basis of Issue Account, or until withdrawal/failure of the Issue or until rejection of the Bid cum Application Form, as the case may be. Once the Basis of Allotment is finalized, the Registrar to the Issue shall send an appropriate request to the SCSB for unblocking the relevant ASBA Accounts and for transferring the amount allocable to the successful Bidders to the Public Issue Account. In case of withdrawal/failure of the Issue, the blocked amount shall be unblocked on receipt of such information from the Registrar to the Issue.

BIDS AT DIFFERENT PRICE LEVELS AND REVISION OF BIDS

a. Our Company in consultation with the BRLM, and without the prior approval of, or intimation, to the Bidders, reserves the right to revise the Price Band during the Bid/ Issue Period, provided that the Cap Price shall be less than or equal to 120% of the Floor Price and the Floor Price shall not be less than the face value of the Equity Shares. The revision in Price Band shall not exceed 20% on the either side i.e. the floor price can move up or down to the extent of 20% of the floor price disclosed. If the revised price band decided, falls within two different price bands than the minimum application lot size shall be decided based on the price band in which the higher price falls into.

b. Our Company in consultation with the BRLM, will finalize the Issue Price within the Price Band, without the prior approval of, or intimation, to the Bidders.

c. The Bidders can Bid at any price within the Price Band. The Bidder has to Bid for the desired number of Equity Shares at a specific price. However, bidding at the Cut-off Price is prohibited for all category of bidders and the same shall be rejected.

d. The price of the specified securities issued to an Anchor Investor shall not be lower than the price issued to other Bidders.

OPTION TO SUBSCRIBE IN THE ISSUE

As per Section 29(1) of the Companies Act 2013, Investors will get the allotment of Equity Shares in dematerialization form only.

The Equity Shares, on allotment, shall be traded on Stock Exchange in demat segment only.
In a single Bid cum Application Form any investor shall not exceed the investment limit/minimum number of specified securities that can be held by him/her/it under the relevant regulations/statutory guidelines and applicable law.

PARTICIPATION BY PROMOTERS, PROMOTER GROUP, THE BOOK RUNNING LEAD MANAGER, ASSOCIATES/AFFILIATES OF BOOK RUNNING LEAD MANAGER AND PERSONS RELATED TO PROMOTERS/ PROMOTER GROUP/ THE BOOK RUNNING LEAD MANAGER

The Book Running Lead Manager shall not be entitled to subscribe to this Issue in any manner except towards fulfilling their underwriting obligations. However, associates and affiliates of the BRLM may subscribe to Equity Shares in the Issue, either in the QIB Portion and Non-Institutional Portion where the allotment is on a proportionate basis. The Promoters, Promoter Group, BRLM and any persons related to the BRLM (except Mutual Funds sponsored by entities related to the BRLM) cannot apply in the Issue under the Anchor Investor Portion.

All categories of investors, including associates or affiliates of the Book Running Lead Manager and Syndicate Members, shall be treated equally for the purpose of allocation to be made on a proportionate basis.

Except as stated below, neither the Book Running Lead Manager nor any associate of the Book Running Lead Manager can apply in the Issue under the Anchor Investor Portion:

a) mutual funds sponsored by entities which are associate of the Book Running Lead Manager;
b) insurance companies promoted by entities which are associate of the Book Running Lead Manager;
c) AIFs sponsored by the entities which are associate of the Book Running Lead Manager; or
d) FPIs other than Individuals, Corporate Bodies and Family Offices sponsored by the entities which are associate of the Book Running Lead Manager.

Further, an Anchor Investor shall be deemed to be an "Associate of the Book Running Lead Manager" if:

a) either of them controls, directly or indirectly through its subsidiary or holding company, not less than 15% of the voting rights in the other; or

b) either of them, directly or indirectly, by itself or in combination with other persons, exercises control over the other; or
c) there is a common Director, excluding Nominee Director, amongst the Anchor Investors & the Book Running Lead Manager.

Further, the Promoter and members of the Promoter Group shall not participate by applying for Equity Shares in the Issue, except in accordance with the applicable law. Furthermore, persons related to the Promoter and the Promoter Group shall not apply in the Issue under the Anchor Investor Portion. It is clarified that a Qualified Institutional Buyer who has rights under a shareholders' agreement or voting agreement entered into with any of the Promoter or members of the Promoter Group of our Company, viz., veto rights or a right to appoint any Nominee Director on our Board, shall be deemed to be a person related to the Promoter or Promoter Group of our Company.
Promoters and Promoter Group and any persons related to our Promoters and Promoter Group cannot participate in the Issue.

BIDS BY ELIGIBLE NON-RESIDENT INDIANS

Eligible NRIs Bidding on non-repatriation basis are advised to use the Bid cum Application Form for residents (white in colour). Eligible NRIs Bidding on a repatriation basis are advised to use the Bid cum Application Form meant for Non-Residents (blue in colour).

Eligible NRIs may obtain copies of Bid cum Application Form from the Designated Intermediaries. Only Bids accompanied by payment in Indian Rupees or freely convertible foreign exchange will be considered for Allotment. Eligible NRI Bidders Bidding on a repatriation basis by using the Non-Resident Forms should authorise their respective SCSB to block their NRE accounts, or Foreign Currency Non-Resident ("FCNR") Accounts, and eligible NRI Bidders Bidding on a non-repatriation basis by using Resident Forms should authorise their respective SCSB to block their NRO accounts for the full Bid Amount, at the time of the submission of the Bid cum Application Form. Eligible NRIs applying on a non-repatriation basis in the Issue through the UPI Mechanism are advised to enquire with their relevant bank, whether their account is UPI linked, prior to submitting a Bid cum Application Form.

In accordance with the FEMA Rules, the total holding by any individual NRI, on a repatriation basis, shall not exceed 5% of the total paid-up equity capital on a fully diluted basis or shall not exceed 5% of the paid-up value of each series of debentures or preference shares or share warrants issued by an Indian company and the total holdings of all NRIs and OCIs put together shall not exceed 10% of the total paid-up equity capital on a fully diluted basis or shall not exceed 10% of the paid-up value of each series of debentures or preference shares or share warrant. Provided that the aggregate ceiling of 10% may be raised to 24% after obtaining approval of the Board of Directors followed by the special resolution to that effect by the shareholders in the General Meeting. As on the date of filing this Draft Red Herring Prospectus, no such resolution has been recommended to the shareholders of our Company for adoption.

Eligible NRIs will be permitted to apply in the Issue through Channel I or Channel II (as specified in the UPI Circulars). Further, subject to applicable law, NRIs may use Channel IV (as specified in the UPI Circulars) to apply in the Issue, provided the UPI facility is enabled for their NRI/ NRO accounts.

For details of restrictions on investment by NRIs, see chapter titled "Restrictions on Foreign Ownership of Indian Securities" beginning on page no. 373 of this Draft Red Herring Prospectus.

Participation of Eligible NRIs in the Issue shall be subject to the FEMA and NDI Rules. Only Bids accompanied by payment in Indian rupees or fully converted foreign exchange will be considered for Allotment.

BIDS BY INDIAN PUBLIC INCLUDING ELIGIBLE NRIS APPLYING ON NON-REPATRIATION

Bid must be made only in the names of Individuals, Limited Companies or Statutory Corporations / Institutions and not in the names of Minors (other than Minor having valid depository accounts as per demographic details provided by the depositary), Foreign Nationals, Trusts, (unless the Trust is registered under the Societies Registration Act, 1860 or any other applicable trust laws and is authorized under its constitution to hold shares and debentures in a company), Hindu Undivided Families (HUF) or their nominees. In case of HUFs, Bids shall be made by the Karta of the HUF.

Eligible NRIs applying on a non-repatriation basis may make payments by inward remittance in foreign exchange through normal banking channels or by debits to NRE / FCNR accounts as well as NRO accounts.

A Bidder in the Net Public Category cannot make a bid for that number of Equity Shares exceeding the number of Equity Shares issued to the public.

BIDS BY MUTUAL FUNDS

As per the current regulations, the following restrictions are applicable for investments by mutual funds:

- No Mutual Fund scheme shall invest more than 10% of its net asset value in the Equity Shares or equity related instruments of any Single Company.

Provided that the limit of 10% shall not be applicable for investments in index funds or sector or industry specific funds.

- No Mutual Fund under all its schemes should own more than 10% of any Company's paid up share capital carrying voting rights.

The Bids made by the Asset Management Companies or Custodians of Mutual Funds shall specifically state the names of the concerned schemes for which the Bids are made.

With respect to Bids by Mutual Funds, a certified copy of their SEBI registration certificate must be lodged with the Bid Cum Application Form. Failing this, our Company in consultation with the Book Running Lead Manager reserves the right to accept or reject any Bid in whole or in part, in either case, without assigning any reason thereof, subject to applicable law.

In case of a Mutual Fund, a separate Bid can be made in respect of each scheme of the Mutual Fund registered with SEBI and such Bids in respect of more than one scheme of the Mutual Fund will not be treated as multiple Bids, provided that the Bids clearly indicate the scheme concerned for which the Bids has been made.

BIDS BY ELIGIBLE FPIs INCLUDING FIIs ON REPATRIATION BASIS

FPIs including FIIs who wish to participate in the issue are advised to use the bid cum application form for non-residents (blue in colour)

In terms of applicable FEMA Rules and the SEBI FPI Regulations, investments by FPIs in the Equity Shares is subject to certain limits, i.e., the individual holding of an FPI (including its investor group (which means multiple entities registered as Foreign Portfolio Investors and directly or indirectly, having common ownership of more than 50% or common control) shall be below 10% of our post- issue Equity Share capital on a fully diluted basis. In case the total holding of an FPI or investor group increases beyond 10% of the total paid-up Equity Share capital of our Company, on a fully diluted basis, the total investment made by the FPI or investor group will be re-classified as FDI subject to the conditions as specified by SEBI and the RBI in this regard and our Company and the investor will be required to comply with applicable reporting requirements. In accordance with the foreign investment limits, the aggregate FII holding in our Company cannot exceed 24% of our total issued capital. However, this limit can be increased to the permitted sectoral cap/statutory limit, as applicable to our Company after obtaining approval of the Board of Directors followed by the special resolution to that effect by the shareholders in the General Meeting. As on the date of filing this Draft Red Herring Prospectus, no such resolution has been recommended to the shareholders of our Company for adoption.

In case of Bids made by FPIs, a certified copy of the certificate of registration issued under the SEBI FPI Regulations is required to be attached to the Bid cum Application Form. Failing this, our Company in consultation with the Book Running Lead Manager reserves the right to accept or reject any Bid in whole or in part, in either case, without assigning any reason thereof, subject to applicable law.

To ensure compliance with the above requirement, SEBI, pursuant to its circular dated July 13, 2018, has directed that at the time of finalisation of the Basis of Allotment, the Registrar shall (i) use the PAN issued by the Income Tax Department of India for checking compliance for a single FPI; and (ii) obtain validation from Depositories for the FPIs who have invested in the issue to ensure there is no breach of the investment limit, within the timelines for issue procedure, as prescribed by SEBI from time to time.

Subject to compliance with all applicable Indian laws, rules, regulations, guidelines and approvals in terms of Regulation 21 of the SEBI FPI Regulations, an FPI is permitted to issue, subscribe to, or otherwise deal in offshore derivative instruments, directly or indirectly, only if it complies with the following conditions:

a) such offshore derivative instruments are issued only by persons registered as Category I FPIs;
b) such offshore derivative instruments are issued only to persons eligible for registration as Category I FPIs;
c) such offshore derivative instruments are issued after compliance with 'know your client' norms;
d) such other conditions as may be specified by SEBI from time to time.

An FPI issuing offshore derivative instruments is also required to ensure that any transfer of offshore derivative instruments issued by or on its behalf, is carried out subject to inter alia the following conditions:

a) such offshore derivative instruments are transferred only to persons in accordance with Regulation 22(1) of the SEBI FPI Regulations; and
b) prior consent of the FPI is obtained for such transfer, except when the persons to whom the offshore derivative instruments are to be transferred to are pre-approved by the FPI.

Bids by following FPIs, submitted with the same PAN but with different beneficiary account numbers, Client IDs and DP IDs shall not be treated as multiple Bids:

a) FPIs which utilise the multi-investment manager structure;
b) Offshore derivative instruments which have obtained separate FPI registration for ODI and proprietary derivative investments;
c) Sub funds or separate class of investors with segregated portfolio who obtain separate FPI registration;
d) FPI registrations granted at investment strategy level / sub fund level where a collective investment scheme or fund has multiple investment strategies / sub-funds with identifiable differences and managed by a single investment manager.
e) Multiple branches in different jurisdictions of foreign bank registered as FPIs;
f) Government and Government related investors registered as Category 1 FPIs; and
g) Entities registered as collective investment scheme having multiple share classes.

The Bids belonging to any of the above mentioned seven structures and having same PAN may be collated and identified as a single Bid in the Bidding process. The Equity Shares allotted in the Bid may be proportionately distributed to the Bidder FPIs (with same PAN).

In order to ensure valid Bids, FPIs making multiple Bids using the same PAN, and with different beneficiary account numbers, Client IDs and DP IDs, are required to provide a confirmation along with each of their Bid cum Application Forms that the relevant FPIs making multiple Bids utilize any of the above-mentioned structures and indicate the name of their respective investment managers in such confirmation. In the absence of such compliance from the relevant FPIs with the operational guidelines for FPIs and designated Collecting Depository Participants issued to facilitate implementation of SEBI FPI Regulations, such multiple Bids shall be rejected.

There is no reservation for Eligible NRI Bidders, AIFs and FPIs. All Bidders will be treated on the same basis with other categories for the purpose of allocation.

Participation of FPIs in the Issue shall be subject to the FEMA Rules.

As per the current regulations, the following restrictions are applicable for investments by FPIs:

1. Foreign Portfolio Investor shall invest only in the following securities, namely- (a) Securities in the primary and secondary markets including shares, debentures and warrants of companies, listed or to be listed on a recognized stock exchange in India; (b) Units of schemes floated by Domestic Mutual Funds, whether listed on a recognized stock exchange or not; (c) Units of schemes floated by a Collective Investment Scheme; (d) Derivatives traded on a recognized stock exchange; (e) Treasury Bills and dated government securities; (f) Commercial papers issued by an Indian Company; (g) Rupee denominated Credit Enhanced Bonds; (h) Security receipts issued by Asset Reconstruction Companies; (i) Perpetual debt instruments and debt capital instruments, as specified by the Reserve Bank of India from time to time; (j) Listed and Unlisted Non-Convertible Debentures/Bonds issued by an Indian Company in the Infrastructure Sector, where

'Infrastructure' is defined in terms of the extant External Commercial Borrowings (ECB) guidelines; (k) Non-Convertible Debentures or Bonds issued by Non-Banking Financial Companies categorized as 'Infrastructure Finance Companies'(IFCs) by the Reserve Bank of India; (l) Rupee Denominated Bonds or Units issued by Infrastructure Debt Funds; (m) Indian Depository Receipts; and (n) Such other instruments specified by the Board from time to time.

2. Where a Foreign Institutional Investor or a sub account, prior to commencement of FEMA Act, holds equity shares in a company whose shares are not listed on any recognized stock exchange, and continues to hold such shares after initial public offering and listing thereof, such shares shall be subject to lock-in for the same period, if any, as is applicable to shares held by a Foreign Direct Investor placed in similar position, under the policy of the Government of India relating to Foreign Direct Investment for the time being in force.

3. In respect of investments in the secondary market, the following additional conditions shall apply:

    a. A Foreign Portfolio Investor shall transact in the securities in India only on the basis of taking and giving delivery of securities purchased or sold;

    b. Nothing contained in clause (a) shall apply to:

        i. Any transactions in derivatives on a recognized stock exchange;
        ii. Short selling transactions in accordance with the framework specified by the Board;
        iii. Any transaction in securities pursuant to an agreement entered into with the Merchant Banker in the process of Market Making or subscribing to unsubscribed portion of the issue in accordance with Chapter IX of the Securities and Exchange Board of India (Issue of Capital and Disclosure Requirements) Regulations, 2018;
        iv. Any other transaction specified by the Board.

    c. No transaction on the stock exchange shall be carried forward;

    d. The transaction of business in securities by a Foreign Portfolio Investor shall be only through stock brokers registered by the Board;

Provided nothing contained in this clause shall apply to:

i. transactions in Government Securities and such other securities falling under the purview of the Reserve Bank of India which shall be carried out in the manner specified by the Reserve Bank of India;
ii. sale of securities in response to a Letter of Offer sent by an acquirer in accordance with the Securities and Exchange Board of India (Substantial Acquisition of Shares and Takeovers) Regulations, 2011;
iii. sale of securities in response to an Offer made by any promoters or acquirer in accordance with the Securities and Exchange Board of India (Delisting of Equity shares) Regulations, 2009;
iv. Sale of securities, in accordance with the Securities and Exchange Board of India (Buy-back of securities) Regulations, 2018;
v. divestment of securities in response to an issue by Indian Companies in accordance with Operative Guidelines for Disinvestment of Shares by Indian Companies in the overseas market through issue of American Depository Receipts or Global Depository Receipts as notified by the Government of India and directions issued by Reserve Bank of India from time to time;
vi. Any Application for, or acquisition of, securities in response to an issue for disinvestment of shares made by the Central Government or any State Government;
vii. Any transaction in securities pursuant to an agreement entered into with Merchant Banker in the process of Market Making or subscribing to unsubscribed portion of the issue in accordance with Chapter IX of the Securities and Exchange Board of India (Issue of Capital and Disclosure Requirements) Regulations, 2018;
viii. Any other transaction specified by the Board.

e. A foreign portfolio investor shall hold, deliver or cause to be delivered securities only in dematerialized form:

Provided that any shares held in non-dematerialized form, before the commencement of FEMA Act, can be held in non-dematerialized form, if such shares cannot be dematerialized.

Unless otherwise approved by the Board, securities shall be registered in the name of the Foreign Portfolio Investor as a beneficial owner for the purposes of the Securities and Exchange Board of India (Depositories and Participants) Regulations, 2018.

4. The purchase of equity shares of each company by a single Foreign Portfolio Investor or an Investor Group shall be below 10% of the total issued capital of the company.

5. The investment by the Foreign Portfolio Investor shall also be subject to such other conditions and restrictions as may be specified by the Government of India from time to time.

6. In cases where the Government of India enters into agreements or treaties with other Sovereign Governments and where such agreements or treaties specifically recognize certain entities to be distinct and separate, the Board may, during the validity of such agreements or treaties, recognize them as such, subject to conditions as may be specified by it.

7. A Foreign Portfolio Investor may lend or borrow securities in accordance with the framework specified by the Board in this regard.

8. No Foreign Portfolio Investor shall issue, subscribe to or otherwise deal in Offshore Derivative Instruments, directly or indirectly, unless the following conditions are satisfied:

a. Such Offshore Derivative Instruments are issued only to persons who are regulated by an appropriate foreign regulatory authority;

b. Such Offshore Derivative Instruments are issued after compliance with 'know your client' norms:

Provided that those unregulated broad based funds, which are classified as Category II Foreign Portfolio Investor by virtue of their investment manager being appropriately regulated shall not issue, subscribe or otherwise deal in Offshore Derivatives Instruments directly or indirectly:

Provided further that no Category III Foreign Portfolio Investor shall issue, subscribe to or otherwise deal in Offshore Derivatives Instruments directly or indirectly.

9. A Foreign Portfolio Investor shall ensure that further issue or transfer of any Offshore Derivative Instruments issued by or on behalf of it is made only to persons who are regulated by an appropriate foreign regulatory authority

10. Foreign Portfolio Investors shall fully disclose to the Board any information concerning the terms of and parties to Offshore Derivative Instruments such as participatory notes, equity linked notes or any other such instruments, by whatever names they are called, entered into by it relating to any securities listed or proposed to be listed in any stock exchange in India, as and when and in such form as the Board may specify.

11. Any Offshore Derivative Instruments issued under the SEBI (Foreign Institutional Investors) Regulations, 1995 or SEBI (Foreign Portfolio Investors) Regulations, 2014, before commencement of SEBI (Foreign Portfolio Investors) Regulations, 2019 shall be deemed to have been issued under the corresponding provisions of SEBI (Foreign Portfolio Investors) Regulations, 2019.

12. A FII or its sub-account which holds a valid certificate of registration shall, subject to payment of conversion fees, be eligible to continue to buy, sell or otherwise deal in securities till the expiry of its registration as a Foreign Institutional Investor or sub-account, or until he obtains a certificate of registration as Foreign Portfolio Investor, whichever is earlier.

13. A Qualified Foreign Investor may continue to buy, sell or otherwise deal in securities subject to the provisions of the SEBI (Foreign Portfolio Investors) Regulations, 2019, for a period of one year from the date of commencement of the aforesaid regulations, or until it obtains a certificate of registration as foreign portfolio investor, whichever is earlier.

14. The issue of Equity Shares to a single FII should not exceed 10% of our post Issue Paid up Capital of the Company. In respect of an FII investing in Equity Shares of our Company on behalf of its sub accounts, the investment on behalf of each sub account shall not exceed 10% of our total issued capital or 5% of our total issued capital in case such sub account is a foreign corporate or an individual.

15. In accordance with the foreign investment limits, the aggregate FII holding in our Company cannot exceed 24% of our total issued capital. However, this limit can be increased to the permitted sectoral cap/statutory limit, as applicable to our Company after obtaining approval of the Board of Directors followed by the special resolution to that effect by the shareholders in the General Meeting. As on the date of filing this Draft Red Herring Prospectus, no such resolution has been recommended to the shareholders of our Company for adoption.

16. In case of FII's in NRI/FII Portion, number of Equity Shares applied shall not exceed issue size.

BIDS BY SEBI REGISTERED ALTERNATIVE INVESTMENT FUND (AIF), VENTURE CAPITAL FUNDS AND FOREIGN VENTURE CAPITAL INVESTORS

The SEBI (Foreign Venture Capital Investor) Regulations, 2000 & SEBI (Alternative Investment Funds) Regulations, 2012, prescribe investment restrictions on Venture Capital Funds, Foreign Venture Capital Investors and AIFs registered with SEBI.

The holding by any Individual Venture Capital Fund registered with SEBI in one Company should not exceed 25% of the corpus of the Venture Capital Fund; a Foreign Venture Capital Investor can invest its entire funds committed for investments into India in one Company. Further, Venture Capital Funds and Foreign Venture Capital Investor can invest only up to 33.33% of the funds available for investment by way of subscription to an Initial Public Offer.

The SEBI (Alternative Investment funds) Regulations, 2012 prescribes investment restrictions for various categories of AIF's.

The category I and II AIFs cannot invest more than 25% of the corpus in one investee Company. A category III AIF cannot invest more than 10% of the corpus in one Investee Company. A Venture capital fund registered as a category I AIF, as defined in the SEBI Regulations, cannot invest more than 1/3rd of its corpus by way of subscription to an initial public offering of a venture capital undertaking. Additionally, the VCFs which have not re-registered as an AIF under the SEBI Regulations shall continue to be regulated by the VCF Regulations until the existing fund or scheme managed by the fund is wound up and such fund shall not launch any new scheme after the notification of the SEBI AIF Regulations

All FIIs and FVCIs should note that refunds, dividends and other distributions, if any, will be payable in Indian Rupees only and net of Bank charges and commission.

Our Company or the Book Running Lead Manager will not be responsible for loss, if any, incurred by the Bidders on account of conversion of foreign currency.

There is no reservation for Eligible NRIs, FPIs and FVCIs and all such Bidders will be treated on the same basis with other categories for the purpose of allocation.

BIDS BY HUFs

Bids by Hindu Undivided Families or HUFs, in the individual name of the Karta. The Bidder should specify that the Bid is being made in the name of the HUF in the Bid Cum Application Form as follows: "Name of sole or first Bidder: XYZ Hindu Undivided Family applying through XYZ, where XYZ is the name of the Karta". Bids by HUFs may be considered at par with Bids from individuals.

BIDS BY LIMITED LIABILITY PARTNERSHIPS

In case of Bids made by limited liability partnerships registered under the Limited Liability Partnership Act, 2008, a certified copy of certificate of registration issued under the Limited Liability Partnership Act, 2008, must be attached to the Bid Cum Application Form. Failing which, the Company reserves the right to reject any Bid, without assigning any reason thereof.

BIDS BY BANKING COMPANIES

In case of Bids made by Banking Companies registered with the RBI, certified copies of (i) the certificate of registration issued by the RBI, and (ii) the approval of such banking company's investment committee are required to be attached to the Bid cum Application Form. Failing this, our Company in consultation with the Book Running Lead Manager, reserve the right to reject any Bid without assigning any reason thereof, subject to applicable law.

The investment limit for banking companies in non-financial services companies as per the Banking Regulation Act, 1949, as amended, (the "Banking Regulation Act"), and the Reserve Bank of India (Commercial Banks – Undertaking of Financial Services) (Amendment) Directions, 2025, as amended, is 10% of the paid-up share capital of the investee company, not being its subsidiary engaged in non-financial services, or 10% of the bank's own paid-up share capital and reserves, whichever is lower. Further, the aggregate investment by a banking company in subsidiaries and other entities engaged in financial services company cannot exceed 20% of the investee company's paid-up share capital and reserves. However, a banking company would be permitted to invest in excess of 10% but not exceeding 30% of the paid-up share capital of such investee company if (i) the investee company is engaged in non-financial activities permitted for banks in terms of Section 6(1) of the Banking Regulation Act, or (ii) the additional acquisition is through restructuring of debt/corporate debt restructuring/strategic debt restructuring, or to protect the bank's interest on loans/investments made to a company. The bank is required to submit a time-bound action plan for disposal of such shares within a specified period to the RBI. A banking company would require a prior approval of the RBI to make (i) investment in excess of 30% of the paid-up share capital of the investee company, (ii) investment in a subsidiary and a financial services company that is not a subsidiary (with certain exceptions prescribed), and (iii) investment in a non-financial services company in excess of 10% of such investee company's paid-up share capital as stated in 5(a)(v)(c)(i) of the Reserve Bank of India (Financial Services provided by Banks) Directions, 2016, as amended.

BIDS BY SCSBS

SCSBs participating in the Issue are required to comply with the terms of the SEBI circulars dated September 13, 2012 and January 2, 2013 issued by SEBI. Such SCSBs are required to ensure that for making Bids on their own account using ASBA, they should have a separate account in their own name with any other SEBI registered SCSBs. Further, such account shall be used solely for the purpose of making Bids in public issues and clear demarcated funds should be available in such account for such Bidders.

The information set out above is given for the benefit of the Bidders. Our Company and the BRLM are not liable for any amendments or modification or changes to applicable laws or regulations, which may occur after the date of this Draft Red Herring Prospectus. Bidders are advised to make their independent investigations and ensure that any single Bid from them does not exceed the applicable investment limits or maximum number of the Equity Shares that can be held by them under applicable law or regulations, or as specified in this draft Red Herring Prospectus, Red Herring Prospectus and Prospectus.

BIDS BY SYSTEMICALLY IMPORTANT NON-BANKING FINANCIAL COMPANIES

In case of Bids made by systemically important non-banking financial companies registered with RBI, a certified copy of the certificate of registration issued by the RBI, a certified copy of its last audited financial statements on a standalone basis and a net worth certificates from its statutory auditor(s), and such other approval as may be required by the Systemically Important NBFCs must be attached to the Bid Cum Application Form. Failing this, our Company in consultation with the BRLM, reserves the right to reject any Bid, without assigning any reason thereof. Systemically Important Non-Banking Financial Companies participating in the Issue shall comply with all applicable regulations, guidelines and circulars issued by RBI from time to time.

BIDS BY INSURANCE COMPANIES

In case of Bids made by insurance companies registered with the IRDA, a certified copy of certificate of registration issued by IRDA must be attached to the Bid Cum Application Form. Failing this, our Company in consultation with the BRLM, reserves the right to reject any Bid, without assigning any reason thereof.

The exposure norms for insurers, prescribed under the IRDAI (Investment) Regulations, 2016, as amended (The "IRDA Investment Regulations"), are broadly set forth below:

a. Equity shares of a Company: the least of 10% of the investee Company's subscribed capital (face value) or 10% of the respective fund in case of life insurer or 10% of investment assets in case of general insurer or reinsurer;

b. The entire group of the investee Company: not more than 15% of the respective fund in case of a life insurer or 15% of investment assets in case of a general insurer or reinsurer or 15% of the investment assets in all companies belonging to the group, whichever is lower; and

c. the industry sector in which the investee company belong to: not more than 15% of the fund of a life insurer or a general insurer or a reinsurer or 15% of the investment asset, whichever is lower.

The maximum exposure limit, in the case of an investment in equity shares, cannot exceed the lower of an amount of 10% of the investment assets of a life insurer or general insurer and the amount calculated under (a), (b) and (c) above, as the case may be.

Insurance companies participating in this Issue shall comply with all applicable regulations, guidelines and circulars issued by IRDAI from time to time.

BIDS BY PROVIDENT FUNDS / PENSION FUNDS

In case of Bids made by provident funds (subject to applicable law) and pension funds, a certified copy of certificate from a chartered accountant certifying the corpus of the provident fund/ pension fund must be attached to the Bid Cum Application Form. Failing this, our Company in consultation with the BRLM, reserves the right to reject any Bid, without assigning any reason thereof.

BIDS UNDER POWER OF ATTORNEY

In case of Bids made pursuant to a power of attorney by Limited Companies, Corporate Bodies, Registered Societies, FPI's, Mutual Funds, Insurance Companies, Insurance finds set up by the Army, Navy Or Air Force of India, Insurance Funds set up by the Department of Posts, India or the National Investment Fund and Provident Funds (subject to applicable law) and Pension Funds, a certified copy of the power of attorney or the relevant Resolution or authority, as the case may be, along with a certified copy of the memorandum of association and articles of association and/or bye laws must be lodged with the Bid Cum Application Form. Failing this, our Company reserves the right to accept or reject any Bid in whole or in part, in either case, without assigning any reason therefore.

In addition to the above, certain additional documents are required to be submitted by the following entities:

a. With respect to Bids by VCFs, FVCIs, FPIs and Mutual Funds, a certified copy of their SEBI registration certificate must be lodged along with the Bid Cum Application Form. Failing this, our Company reserves the right to accept or reject any Bid, in whole or in part, in either case without assigning any reasons thereof.

b. With respect to Bids by Insurance Companies registered with the Insurance Regulatory and Development Authority, in addition to the above, a certified copy of the certificate of registration issued by the Insurance Regulatory and Development Authority must be lodged with the Bid Cum Application Form as applicable. Failing this, our Company reserves the right to accept or reject any Bid, in whole or in part, in either case without assigning any reasons thereof.

c. With respect to Bids made by Provident Funds with minimum corpus of ₹ 25 Crores (subject to applicable law) and Pension Funds with a minimum corpus of ₹ 25 Crores, a certified copy of a certificate from a chartered accountant certifying the corpus of the provident fund/pension fund must be lodged along with the Bid Cum Application Form. Failing this, our Company reserves the right to accept or reject such Bid, in whole or in part, in either case without assigning any reasons thereof.

d. With respect to Bids made by Limited Liability Partnerships registered under the Limited Liability Partnership Act, 2008, a certified copy of certificate of registration issued under the Limited Liability Partnership Act, 2008, must be attached to the Bid Cum Application Form.

The Company in its absolute discretion, reserves the right to relax the above condition of simultaneous lodging of the power of attorney along with the Bid Cum Application Form, subject to such terms and conditions that the Company and the Book Running lead manager may deem fit.

The Company, in its absolute discretion, reserves the right to permit the holder of the power of attorney to request the Registrar to the Issue that, for the purpose of printing particulars on the refund order and mailing of the Allotment Advice / CANs / letters notifying the unblocking of the bank accounts of ASBA Bidders, the Demographic Details given on the Bid Cum Application Form should be used (and not those obtained from the Depository of the application). In such cases, the Registrar to the Issue shall use Demographic Details as given on the Bid Cum Application Form instead of those obtained from the Depositories.

The above information is given for the benefit of the Bidders. The Company and the BRLM are not liable for any amendments or modification or changes in applicable laws or regulations, which may occur after the date of this Draft Red Herring Prospectus. Bidders are advised to make their independent investigations and ensure that the number of Equity Shares applied for do not exceed the applicable limits under laws or regulations.

BIDS BY ANCHOR INVESTORS

In accordance with the SEBI ICDR Regulations, in addition to details and conditions mentioned in this section, the key terms for participation by Anchor Investors are provided below.

1. Anchor Investor Application Forms will be made available for the Anchor Investors Portion at the offices of the Book Running Lead Manager.
2. The Bid must be for a minimum of such number of Equity Shares so that the Bid Amount is at least ₹200.00 lakhs. A Bid cannot be submitted for over 60% of the QIB Portion. In case of a Mutual Fund, separate Bids by individual schemes of a Mutual Fund will be aggregated to determine the minimum application size of ₹200.00 lakhs.
3. One-third of the Anchor Investor Portion will be reserved for allocation to domestic Mutual Funds.
4. Bidding for Anchor Investors will open one Working Day before the Bid/ issue Opening Date and shall be completed on the same day.
5. Our Company in consultation with the Book Running Lead Manager, will finalize allocation to the Anchor Investors on a discretionary basis, provided that the minimum and maximum number of Allottees in the Anchor Investor Portion will be, as mentioned below:

   - where allocation in the Anchor Investor Portion is up to ₹ 200.00 Lakhs, maximum of 2 (two) Anchor Investors.
   - where the allocation under the Anchor Investor Portion is more than ₹200.00 Lakhs but up to ₹2,500.00 Lakhs, minimum of 2 (two) and maximum of 15 (fifteen) Anchor Investors, subject to a minimum Allotment of ₹100.00 Lakhs per Anchor Investor; and
   - where the allocation under the Anchor Investor portion is more than ₹2,500.00 Lakhs:(i) minimum of 5 (five) and maximum of 15 (fifteen) Anchor Investors for allocation up to ₹2,500.00 Lakhs; and (ii) an additional 10 Anchor Investors for every additional allocation of ₹2,500.00 Lakhs or part thereof in the Anchor Investor Portion; subject to a minimum Allotment of ₹100.00 Lakhs per Anchor Investor.

6. Allocation to Anchor Investors will be completed on the Anchor Investor Bidding Date. The number of Equity Shares allocated to Anchor Investors and the price at which the allocation is made will be made available in the public domain by the Book Running Lead Manager before the Bid/ issue Opening Date, through intimation to the Stock Exchange.

7. Anchor Investors cannot withdraw or lower the size of their Bids at any stage after submission of the Bid
8. If the issue Price is greater than the Anchor Investor Allocation Price, the additional amount being the difference between the issue Price and the Anchor Investor Allocation Price will be payable by the Anchor Investors within Anchor Investor Pay-in Date specified in the CAN. If the Issue Price is lower than the Anchor Investor Allocation Price, Allotment to successful Anchor Investors will be at the higher price, i.e., the Anchor Investor Issue Price.
9. The Equity Shares Allotted in the Anchor Investor Portion will be locked in, in accordance with the SEBI ICDR Regulations. 50% of the Equity Shares Allotted to Anchor Investors in the Anchor Investor Portion shall be locked in for a period of 90 days from the date of Allotment, while the remaining 50% of the Equity Shares Allotted to Anchor Investors in the Anchor Investor Portion shall be locked in for a period of 30 days from the date of Allotment.
10. Neither the (a) Book Running Lead Manager or any associate of the Book Running Lead Manager (other than mutual funds sponsored by entities which are associate of the Book Running Lead Manager or insurance companies promoted by entities which are associate of the Book Running Lead Manager or Alternate Investment Funds (AIFs) sponsored by the entities which are associates of the Book Running Lead Manager or FPIs, other than individuals, corporate bodies and family offices, sponsored by the entities which are associate of the Book Running Lead Manager) nor (b) the Promoters, Promoter Group or any person related to the Promoters or members of the Promoter Group shall apply under the Anchor Investors category.

For more information, please read the General Information Document.

The information set out above is given for the benefit of the Bidders. Our Company and the Book Running Lead Manager are not liable for any amendments or modification or changes to applicable laws or regulations, which may occur after the date of this Draft Red Herring Prospectus. Bidders are advised to make their independent investigations and ensure that any single Bid from them does not exceed the applicable investment limits or maximum number of the Equity Shares that can be held by them under applicable law or regulations.

ISSUANCE OF A CONFIRMATION OF ALLOCATION NOTE ("CAN") AND ALLOTMENT IN THE ISSUE

- Upon approval of the basis of allotment by the Designated Stock Exchange, the Book Running Lead Manager or Registrar to the Issue shall send to the SCSBs a list of their Bidders who have been allocated Equity Shares in the Issue.

- The Registrar will then dispatch a CAN to their Bidders who have been allocated Equity Shares in the Issue. The dispatch of a CAN shall be deemed a valid, binding and irrevocable contract for the Bidder.

- On the basis of approved Basis of Allotment, the Issuer shall pass necessary corporate action to facilitate the allotment and credit of equity shares. Applicants are advised to instruct their Depository Participants to accept the Equity Shares that may be allotted to them pursuant to the Issue.

- Issuer will make the allotment of the Equity Shares and initiate corporate action for credit of shares to the successful applicants Depository Account within 2 working days of the Issue Closing date. The Issuer also ensures the credit of shares to the successful Applicants Depository Account is completed within one working Day from the date of allotment, after the funds are transferred from ASBA Public Issue Account to Public Issue account of the issuer

INDICATIVE PROCESS FLOW FOR BIDS IN PUBLIC ISSUE

ASBA PROCESS

In accordance with the SEBI circular no. CIR/CFD/POLICYCELL/11/2015 dated November 10, 2015 all the Bidders have to compulsorily apply through the ASBA Process. Our Company and the Book Running Lead Manager are not liable for any amendments, modifications, or changes in applicable laws or regulations, which may occur after the date of this Draft Red Herring Prospectus. ASBA Bidders are advised to make their independent investigations and to ensure that the ASBA Bid cum Application Form is correctly filled up, as described in this section.

Lists of banks that have been notified by SEBI to act as SCSB (Self Certified Syndicate Banks) for the ASBA Process are provided on www.sebi.gov.in. For details on designated branches of SCSB collecting the Bid cum Application Form, please refer the below mentioned SEBI link.

https://www.sebi.gov.in/sebiweb/other/OtherAction.do?doRecognisedFpi=yes&intmId=35
https://www.sebi.gov.in/sebiweb/other/OtherAction.do?doRecognisedFpi=yes&intmId=34

ASBA Applicants are required to submit their Applications, either in physical or electronic mode. In case of application in physical mode, the ASBA Applicant shall submit the ASBA Application Form at the Designated Branch of the SCSB or Registered Brokers or Registered RTA's or DPs registered with SEBI. In case of application in electronic form, the ASBA Applicant shall submit the Application Form either through the internet banking facility available with the SCSB, or such other electronically enabled mechanism for applying and blocking funds in the ASBA account held with SCSB, and accordingly registering such Applications.

Upon receipt of the Application Form, submitted whether in physical or electronic mode, the Designated Branch of the SCSB shall verify if sufficient funds equal to the Application Amount are available in the ASBA Account, as mentioned in the Application Form, prior to uploading such Applications with the Stock Exchange.

If sufficient funds are not available in the ASBA Account, the Designated Branch of the SCSB shall reject such Applications and shall not upload such Applications with the Stock Exchange.

If sufficient funds are available in the ASBA Account, the SCSB shall block an amount equivalent to the Application Amount mentioned in the Application Form and will enter each Application into the electronic bidding system as a separate Application and generate a TRS for each price and demand option. The TRS shall be furnished to the ASBA Applicant on request.

The Application Amount shall remain blocked in the aforesaid ASBA Account until finalisation of the Basis of Allotment and consequent transfer of the Application Amount against the Allotted Equity Shares to the Public Issue Account, or until withdrawal/failure of the Issue or until withdrawal/rejection of the Application Form, as the case may be.

Once the Basis of Allotment is finalized, the Registrar to the Issue shall send an appropriate request to the SCSB for unblocking the relevant ASBA Accounts and for transferring the amount allocable to the successful Applicants to the Public Issue Account. In case of withdrawal/failure of the Issue, the blocked amount shall be unblocked on receipt of such information from the Registrar to the Issue.

PROCESS FLOW FOR APPLICATIONS IN PUBLIC ISSUE SUBMITTED BY INDIVIDUAL INVESTORS

In addition to application to be submitted to SCSB, with whom the bank account to be blocked, is maintained, an Individual Investors would also have the option to submit application form with any of the intermediary and use his / her bank account linked UPI ID for the purpose of blocking of funds with effect from January 01, 2019.

The detailed process in this regard is as detailed hereunder:

APPLICATION AND VALIDATION PROCESS

a. submission of the application with the intermediary, the Individual Investors would be required to have / create a UPI ID, with a maximum length of 45 characters including the handle (Example: InvestorID@bankname).

b. Individual Investors will fill in the Application details in the application form along with his/ her bank account linked UPI ID and submit the application with any of the intermediary.

c. The intermediary upon receipt of form will upload the Application details along with UPI ID in the stock exchange bidding platform.

d. Once the Application has been entered in the bidding platform, the exchange will undertake validation of the PAN and Demat Account details of Individual Investors with the depository.

e. Depository will validate the aforesaid Application details on a real time basis and send response to stock exchange which would be shared by stock exchange with intermediary through its platform, for corrections, if any.

f. SMS from exchange to Individual Investors for applying: Once the Application details are uploaded on the stock exchange platform, the stock exchange shall send an SMS to the Individual Investors regarding submission of his / her application, daily at the end of day basis, during issue period. For the last day of applying, the SMS may be sent out the next working day.

THE BLOCK PROCESS

a. Post undertaking validation with depository, the stock exchange will, on a continuous basis, electronically share the Application details along with Individual Investors UPI ID, with the Sponsor Bank appointed by the issuer.

b. The Sponsor Bank will initiate a mandate request on the Individual Investors i.e. request the Individual Investors to authorize blocking of funds equivalent to application amount and subsequent debit of funds in case of allotment. For all pending UPI Mandate Requests, the Sponsor Bank will initiate requests for blocking of funds in the ASBA Accounts of relevant investors with a confirmation cut-off time of 05:00 pm on the the Issue Closing Date **("Cut-Off Time")**. Accordingly, Individual Investors using the UPI Mechanism need to accept UPI Mandate Requests for blocking off funds prior to the Cut-Off Time and all pending UPI Mandate Requests after the Cut-Off Time will lapse.

c. The request raised by the Sponsor Bank, would be electronically received by the Individual Investors as a SMS / intimation on his / her mobile no. / Mobile app, associated with UPI ID linked bank account.

d. The Individual Investors would be able to view the amount to be blocked as per his / her Application in such intimation. The Individual Investors would also be able to view an attachment wherein the IPO Application details submitted by Individual Investors will be visible. After reviewing the details properly, Individual Investors would be required to proceed to authorize the mandate. Such mandate raised by sponsor bank would be a one-time mandate for each application in the IPO.

e. Upon successful validation of block request by the Individual Investors, as above, the said information would be electronically received by the Individual Investors' bank, where the funds, equivalent to application amount, would get blocked in Individual Investors account. Intimation regarding confirmation of such block of funds in Individual Investors account would also be received by the Individual Investors.

f. The information containing status of block request (e.g. – accepted / decline / pending) would also be shared with the Sponsor Bank, which in turn would be shared with stock exchange. The block request status would also be displayed on stock exchange platform for information of the intermediary.

g. The information received from Sponsor Bank, would be shared by stock exchange with RTA in the form of a file for the purpose of reconciliation.

h. Downward Modification and cancellation of the application shall not be applicable to any of the category of bidding.

Post closure of the Issue, the stock exchange will share the Application details with the Registrar along with the final file received from the Sponsor Bank containing status of blocked funds or otherwise, along with the ASBA Account details with respect to applications made by Individual Investors using UPI ID.

NUMBER OF APPLICATIONS PER BANK ACCOUNT

An investor making application using any of channels under UPI Payments Mechanism, shall use only his / her own bank account or only his / her own bank account linked UPI ID to make an application in public issues. Applications made using third party bank account or using third party linked bank account UPI ID are liable for rejection. Sponsor Bank shall provide the investors UPI linked bank account details to RTA for purpose of reconciliation. RTA shall undertake technical rejection of all applications to reject applications made using third party bank account.

HOW TO APPLY?

In accordance with the SEBI circular no. CIR/CFD/POLICYCELL/11/2015 dated November 10, 2015 all the Applicants has to compulsorily apply through the ASBA Process. Further, pursuant to SEBI Circular No. SEBI/HO/CFD/DIL2/CIR/P/2018/138 dated November 01, 2018, Individual Investors applying in public Issue may use either Application Supported by Blocked Amount (ASBA) facility for making application or also can use UPI as a payment mechanism with Application Supported by Blocked Amount for making application.

TERMS OF PAYMENT

The entire Issue price of ₹ [●]/- per share is payable on application. In case of allotment of lesser number of Equity
Shares than the number applied, the Registrar shall instruct the SCSBs to unblock the excess amount paid on Application to the Bidders.

SCSBs will transfer the amount as per the instruction of the Registrar to the Public Issue Account, the balance amount after transfer will be unblocked by the SCSBs.

The Bidders should note that the arrangement with Bankers to the Issue or the Registrar is not prescribed by SEBI and has been established as an arrangement between our Company, Banker to the Issue and the Registrar to the Issue to facilitate collections from the Bidders.

PAYMENT MECHANISM

The Bidders shall specify the bank account number in their Bid Cum Application Form and the SCSBs shall block an amount equivalent to the Application Amount in the bank account specified in the Bid Cum Application Form. The SCSB shall keep the Bid Amount in the relevant bank account blocked until rejection of the Application or receipt of instructions from the Registrar to unblock the Application Amount. However, Downward Modification and cancellation of the application shall not be applicable to any of the category of bidding. In the event of rejection of the Bid Cum Application Form or for unsuccessful Bid cum Application Forms, the Registrar to the Issue shall give instructions to the SCSBs to unblock the application money in the relevant bank account within one day of receipt of such instruction. The Application Amount shall remain blocked in the ASBA Account until finalization of the Basis of Allotment in the Issue and consequent transfer of the Application Amount to the Public Issue Account, or until withdrawal/ failure of the Issue or until rejection of the Application, as the case may be.

UNBLOCKING OF ASBA ACCOUNT

On the basis of instructions from the Registrar to the Issue, the SCSBs shall transfer the requisite amount against each successful ASBA Applicant to the ASBA Public Issue Account as per section 40(3) of the Companies Act, 2013 and shall unblock excess amount, if any in the ASBA Account.

In case of applications made by using any of channels under UPI Payments Mechanism, Registrar to the Issue will share the debit file with Sponsor bank (through Stock exchange) and SCSBs, as applicable, for credit of funds in the public issue account and unblocking of excess funds in the Investors account. The Sponsor bank based on the mandate approved by the Investors at the time of blocking of funds, will raise the debit / collect request from Investors bank account, whereupon the funds will be transferred from Investors account to public issue account and remaining funds, if any, will be unblocked without any manual intervention by Investors or his / her bank.

However, the Application Amount may be unblocked in the ASBA Account or Bank Account link in UPI Mechanism prior to receipt of intimation from the Registrar to the Issue by the Controlling Branch of the SCSB regarding finalization of the Basis of Allotment in the Issue, in the event of withdrawal/failure of the Issue or rejection of the ASBA Application or Application made through UPI Mechanism, as the case may be.

(The rest of the page is intentionally left blank)

MAXIMUM AND MINIMUM APPLICATION SIZE

For Individual Investors (who applies for minimum application size)

The Application must be for a minimum of 2 Lots of Equity Shares each and in multiples of Equity Shares thereafter, so as to ensure that the Application Price payable by the Bidders is above ₹ 2,00,000. In case of revision of Applications, the Individual Investors have to ensure that the Application Price is above ₹ 2,00,000 and minimum 2 Lots.

Downward Modification and cancellation of the application shall not be applicable to any of the category of bidding

For Other than Individual Investors who applies for minimum application size (Non-Institutional Investors and QIBs)

The Application must be for a minimum of such number of Equity Shares that the Application is for more than 2 lots and in multiples of [●] Equity Shares thereafter. An application cannot be submitted for more than the Net Issue Size. However, the maximum Application by a QIB investor should not exceed the investment limits prescribed for them by applicable laws. Under existing SEBI Regulations,

In case of revision in Applications, the Non-Institutional Investors, who are individuals, must ensure that the Application Amount is more than two lots for being considered for allocation in the Non-Institutional Portion,

However, Downward Modification and cancellation of the application shall not be applicable to any of the category of bidding

The above information is given for the benefit of the Bidders. The Company and the BRLM are not liable for any amendments or modification or changes in applicable laws or regulations, which may occur after the date of this Draft Red Herring Prospectus. Bidders are advised to make their independent investigations and ensure that the number of Equity Shares applied for do not exceed the applicable limits under laws or regulations.

OPTION TO RECEIVE EQUITY SHARES IN DEMATERIALIZED FORM

Furnishing the details of depository account is mandatory and applications without depository account shall be treated as incomplete and rejected.

Investors should note that Allotment of Equity Shares to all successful Bidders will only be in the dematerialized form in compliance of the Companies Act, 2013.

The Equity Shares on Allotment shall be traded only in the dematerialized segment of the Stock Exchanges.

Bidders will not have the option of getting Allotment of the Equity Shares in physical form. Allottees shall have the option to re-materialize the Equity Shares, if they so desire, as per the provision of the Companies Act and the Depositories Act.

INFORMATION FOR THE BIDDERS

In addition to the instructions provided to the Bidders in the General Information Document for Investing in Public Issues, Bidders are requested to note the following additional information in relation to the Issue.

a. Our Company and the Book Running Lead Manager shall declare the Bid/ Issue Opening Date and Bid/ Issue Closing Date in the Red Herring Prospectus to be registered with the RoC and also publish the same in two national newspapers (one each in English and Hindi) and in a regional newspaper with wide circulation. This advertisement shall be in the prescribed format.

b. Our Company will file the Red Herring Prospectus with the RoC at least 3 (three) working days before the Issue Opening Date.

c. The Book Running Lead Manager will circulate copies of the Red Herring Prospectus along with the Bid cum Application Form to potential investors.

d. Any investor, being eligible to invest in the Equity Shares, who would like to obtain the Red Herring Prospectus and/ or the Bid Cum Application Form can obtain the same from the Company's Registered Office or from the Registered Office of the Book Running Lead Manager.

e. Copies of the Bid Cum Application Form along with the Abridged Prospectus and copies of the Red Herring Prospectus will be available with the Book Running Lead Manager, the Registrar to the Issue and Issuer Company at the Registered Office of our Company. Electronic Bid Cum Application Forms will also be available on the websites of the Stock Exchange.

f. Bidders who are interested in subscribing to the Equity Shares should approach the Book Running Lead Manager or Designated Intermediaries to register their Applications.

g. Applications made in the name of Minors (except under guardianship) and/or their nominees shall not be accepted.

h. Bid Cum Application Forms submitted directly to the SCSBs should bear the stamp of the SCSBs and/or the Designated Branch, or the respective Designated Intermediaries. Bid Cum Application Form submitted by Bidders whose beneficiary account is inactive shall be rejected.

i. The Bid Cum Application Form can be submitted either in physical or electronic mode, to the SCSBs with whom the ASBA Account is maintained, or other Designated Intermediaries (Other than SCSBs). SCSBs may provide the electronic mode of collecting either through an internet enabled collecting and banking facility or such other secured, electronically enabled mechanism for applying and blocking funds in the ASBA Account. The Bidders intending to UPI Channel, have to provide the UPI ID and validate the blocking of the funds and such Bid Cum Application Forms that do not contain such details are liable to be rejected.

j. Bidders applying directly through the SCSBs should ensure that the Bid Cum Application Form is submitted to a Designated Branch of SCSB, where the ASBA Account is maintained. Applications submitted directly to the SCSB's or other Designated Intermediaries (Other than SCSBs), the relevant SCSB, shall block an amount in the ASBA Account equal to the Application Amount specified in the Application Form, before entering the ASBA application into the electronic system.

k. Except for applications by or on behalf of the Central or State Government and the Officials appointed by the courts and by investors residing in the State of Sikkim, the Bidders, or in the case of application in joint names, the first Bidder (the first name under which the beneficiary account is held), should mention his/her PAN allotted under the Income Tax Act. In accordance with the SEBI Regulations, the PAN would be the sole identification number for participating in transacting in the securities market, irrespective of the amount of transaction. Any Bid Cum Application Form without PAN is liable to be rejected. The demat accounts of Bidders for whom PAN details have not been verified, excluding person resident in the State of Sikkim or persons who may be exempted from specifying their PAN for transacting in the securities market, shall be "suspended for credit" and no credit of Equity Shares pursuant to the Issue will be made into the accounts of such Bidders.

l. The Bidders may note that in case the PAN, the DP ID and Client ID mentioned in the Bid Cum Application Form and entered into the electronic collecting system of the Stock Exchange Designated Intermediaries do not match with PAN, the DP ID and Client ID available in the Depository database, the Bid Cum Application Form is liable to be rejected.

PRE-ISSUE AND PRICE BAND ADVERTISEMENT

As provided in Regulation 247(2) of the SEBI (ICDR) Regulations, 2018, our Company shall within two working days of filing the Draft Red Herring prospectus with the NSE Emerge, make a public announcement in two national newspapers (one each in English and Hindi) and in a regional newspaper, each with wide circulation, disclosing the fact of filing of the Draft Red Herring prospectus with the NSE Emerge and inviting the public to provide their comments.

Subject to Section 30 of the Companies Act, our Company shall, after registering the Red Herring Prospectus with the ROC, publish a pre-Issue and price band advertisement, in the form prescribed by the SEBI ICDR Regulations, in two national newspapers (one each in English and Hindi) and in a regional newspaper, each with wide circulation.

In the pre-Issue and price band advertisement, we shall state the Bid/ Issue Opening Date and the Bid/ Issue Closing Date and the Price bank information. This advertisement, subject to the provisions of Section 30 of the Companies Act, 2013 and Regulation 264 of SEBI ICDR Regulations, shall be in the format prescribed in Part A of Schedule X of the SEBI ICDR Regulations.

ALLOTMENT ADVERTISEMENT

Our Company, the Book Running Lead Manager and the Registrar shall publish an allotment advertisement before commencement of trading, disclosing the date of commencement of trading in two national newspapers (one each in English and Hindi) and in a regional newspaper, each with wide circulation,

SIGNING OF UNDERWRITING AGREEMENT

The issue is 100% Underwritten. Our Company has entered into an Underwriting Agreement with the [●] on [●]

FILING OF THE RED HERRING PROSPECTUS WITH THE ROC

Our Company will file a copy of the Red Herring Prospectus and Prospectus with the RoC in terms of Section 32 of Companies Act, 2013.

ISSUANCE OF ALLOTMENT ADVICE:

Upon approval of the Basis of Allotment by the designated stock exchange, the Registrar shall upload it on its website. On the basis of approved basis of allotment, the Issuer shall make necessary corporate action to facilitate the allotment and credit of equity shares. Bidders are advised to instruct their Depository Participants to accept the Equity Shares that may be allotted to them pursuant to the issue.

Pursuant to confirmation of such corporate actions, the Registrar will dispatch Allotment Advice to the Bidders who have been allotted Equity Shares in the Issue. The dispatch of allotment advice shall be deemed a valid, binding and irrevocable contract.

Issuer will make the allotment of the equity shares and initiate corporate action for credit of shares to the successful Bidders Depository Account within 2 working days of the Issue Closing date. The Issuer also ensures the credit of shares to the successful Bidders Depository Account is completed within one working Day from the date of allotment, after the funds are transferred from ASBA Public Issue Account to Public Issue account of the issuer.

DESIGNATED DATE

On the Designated date, the SCSBs or Sponsor Bank shall transfer the funds represented by allocations of the Equity Shares into Public Issue Account with the Bankers to the Issue.

Our Company will issue and dispatch letters of allotment/ or letters of regret along with refund order or credit the allotted securities to the respective beneficiary accounts, if any within a period of 2 working days of the Issue Closing Date. Our Company will intimate the details of allotment of securities to Depository immediately on allotment of securities under Section 56 of the Companies Act, 2013 or other applicable provisions, if any.

COMPLETION OF FORMALITIES FOR LISTING & COMMENCEMENT OF TRADING

The Company shall use best efforts to ensure that all steps for completion of the necessary formalities for listing and commencement of trading at NSE Emerge where the Equity Shares are proposed to be listed are taken within 3 (Three) working days from Issue Closing Date.

GROUNDS FOR REFUND

NON-RECEIPT OF LISTING PERMISSION

An Issuer makes an Application to the Stock Exchange(s) for permission to deal in/list and for an official quotation of the Equity Shares. Our Company shall make the application with SME Plaltform of National Stock Exchange of India Limited i.e., NSE Emerge. The designated Stock Exchange is "NSE Emerge" with which the Basis of Allotment shall be finalised.

If the permission to deal in and official quotation of the Equity Shares are not granted by any of the Stock Exchange, the Issuer may forthwith repay, without interest, all money received from the Bidders in pursuance of the Red Herring Prospectus.

In case, our Company fails to obtain listing or trading permission from the stock exchange where the specified securities were to be listed, our Company shall refund through verifiable means the entire monies received within seven days of receipt of intimation from stock exchanges rejecting the application for listing of specified securities. The Book Running Lead Manager and Registrar to the Issue shall intimate Public Issue Bank/Bankers to the Issue and Public Issue Bank/Bankers to the Issue shall transfer the funds from Public Issue account to Refund Account as per the written instruction from Book Running Lead Manager and the Registrar for further payment to the beneficiary Bidders.

If any such money is not repaid within eight days after the issuer becomes liable to repay it, the issuer and every director of the company who is an officer in default shall, on and from the expiry of the eighth day, be jointly and severally liable to repay that money with interest at the rate of fifteen per cent per annum.

MODE OF REFUND

Within two Working Days of the Bid/Issue Closing Date, the Registrar to the Issue shall give instructions to SCSBs or in case of Bids by Investors applying through the UPI mechanism to the Sponsor Bank, to revoke the mandate and for unblocking the amount in ASBA Accounts of unsuccessful Bidders and also for any excess amount blocked on Bids.

The Registrar to the Issue may instruct the controlling branch of the SCSB to unblock the funds in the relevant ASBA Account for any rejected or unsuccessful ASBA Bids or in the event of withdrawal or failure of the Issue.

LETTERS OF ALLOTMENT OR REFUND ORDERS OR INSTRUCTIONS TO THE SCSBS

The Registrar to the Issue shall give instructions for credit to the beneficiary account with depository participants within 2 Working Days from the Bid/Issue Closing Date. The Registrar shall instruct the Sponsor Bank or relevant SCSBs to, on the receipt of such instructions from the Registrar, revoke the mandate and for unblocking the amount in ASBA Accounts to the extent of the Bid Amount specified in the Bid Cum Application Form or the relevant part thereof, for rejected or unsuccessful or partially successful ASBA Applications within 2 Working Days of the Issue Closing Date.

INTEREST IN CASE OF DELAY IN ALLOTMENT OR REFUND:

The securities issued to the public shall be allotted within the period prescribed by the Board. The issuer shall also pay interest at the rate of fifteen per cent. per annum if the allotment letters or refund orders have not been despatched to the Bidders or if, in a case where the refund or portion thereof is made in electronic manner, the refund instructions have not been given to the clearing system in the disclosed manner within six days from the date of the closure of the issue. However, bids received after the closure of issue in fulfilment of underwriting obligations to meet the minimum subscription requirement, shall not be entitled for the said interest.

1. **Issuance of Allotment Advice:** Upon approval of the Basis of Allotment by the Designated Stock Exchange, the Lead Manager or the Registrar to the Issue shall send to the Bankers to the Issue a list of their Applicants who have been allocated/Allotted Equity Shares in this Issue.

2. Approval of the Basis of Allotment by the Designated Stock Exchange. As described above shall be deemed a valid, binding and irrevocable contract for the Applicant.

3. Pursuant to confirmation of corporate actions with respect to Allotment of Equity Shares, the Registrar to the Issue will dispatch Allotment Advice to the Applicants who have been Allotted Equity Shares in the Issue.

INFORMATION FOR BIDDERS

The relevant Designated Intermediary will enter a maximum of three Bids at different price levels opted in the Bid cum Application Form and such options are not considered as multiple Bids. It is the Bidder's responsibility to obtain the acknowledgment slip from the relevant Designated Intermediary. The registration of the Bid by the Designated Intermediary does not guarantee that the Equity Shares shall be allocated/Allotted. Such Acknowledgement Slip will be non-negotiable and by itself will not create any obligation of any kind. When a Bidder revises his or her Bid, he /she shall surrender the earlier Acknowledgement Slip and may request for a revised acknowledgment slip from the relevant Designated Intermediary as proof of his or her having revised the previous Bid.

In relation to electronic registration of Bids, the permission given by the Stock Exchange to use their network and software of the electronic bidding system should not in any way be deemed or construed to mean that the compliance with various statutory and other requirements by our Company and/or the Book Running Lead Manager are cleared or approved by the Stock Exchange; nor does it in any manner warrant, certify or endorse the correctness or completeness of compliance with the statutory and other requirements, nor does it take any responsibility for the financial or other soundness of our Company, the management or any scheme or project of our Company; nor does it in any manner warrant, certify or endorse the correctness or completeness of any of the contents of this Draft Red Herring Prospectus; nor does it warrant that the Equity Shares will be listed or will continue to be listed on the Stock Exchange.

The Issue shall be opened after at least three Working Days from the date of filing of the Red Herring Prospectus with the RoC.

GENERAL INSTRUCTIONS

Please note that Downward Modification and cancellation of application shall not be applicable to any of the category of bidding.

Do's:

1. Check if you are eligible to apply as per the terms of the Draft Red Herring Prospectus and under applicable law, rules, regulations, guidelines and approvals; All Bidders (other than Anchor Investors) should submit their applications through the ASBA process only;
2. Ensure that you have Bid within the Price Band;
3. Read all the instructions carefully and complete the Bid Cum Application Form in the prescribed form;
4. Ensure that the details about the PAN, DP ID and Client ID, UPI ID are correct and the Bidders depository account is active, as Allotment of the Equity Shares will be in the dematerialized form only;
5. Ensure that your Bid Cum Application Form bearing the stamp of a Designated Intermediary is submitted to the Designated Intermediary at the Bidding Centre;
6. UPI Bidders Bidding using the UPI Mechanism in the Issue are required to ensure that they use only their own ASBA Account or only their own bank account linked UPI ID to make an application in the Issue and not ASBA Account or bank account linked UPI ID of any third party
7. Ensure that you have funds equal to the Bid Amount in the ASBA Account maintained with the SCSB before submitting the ASBA Form to the relevant Designated Intermediaries;
8. Ensure that you have accepted the UPI Mandate Request received from the Sponsor Banks prior to 5:00 pm on the Bid/ Issue Closing Date;
9. In case of joint Bids, ensure that the First Bidder is the ASBA Account holder (or the UPI-linked bank account holder, as the case may be) and the signature of the First Bidder is included in the Bid cum Application Form;
10. Ensure that the names given in the Bid cum Application Form is/are exactly the same as the names in which the beneficiary account is held with the Depository Participant. In case of joint Bids, the Bid cum Application Form should contain the name of only the first bidder whose name should also appear as the first holder of the beneficiary account held in joint names;
11. In the case of QIBs and NIIs, ensure that while Bidding through a Designated Intermediary, the ASBA Form is submitted to a Designated Intermediary in a Bidding Centre and that the SCSB where the ASBA

Account, as specified in the ASBA Form, is maintained has named at least one branch at that location for the Designated Intermediary to deposit ASBA Forms (a list of such branches is available on the website of SEBI at http://www.sebi.gov.in). Individual Investors bidding through the non-UPI Mechanism should either submit the physical Bid cum Application Form with the SCSBs or Designated Branches of SCSBs under Channel I (described in the UPI Circulars) or submit the Application Form online using the facility of 3- in-1 type accounts under Channel II (described in the UPI Circulars);

12. Ensure that you have mentioned the correct ASBA Account number (for all Bidders other than Individual Investors using the UPI Mechanism) in the Bid cum Application Form;
13. Bidders using the UPI Mechanism should ensure that the correct UPI ID (with a maximum length of 45 characters including the handle) is mentioned in the Application Form;
14. Bidders using UPI Mechanism through the SCSBs and mobile applications shall ensure that the name of the Bank appears in the list of SCSBs which are live on UPI, as displayed on the SEBI website. Individual Investors shall ensure that the name of the app and the UPI handle which is used for making the application appears in Annexure 'A' to the SEBI circular no. SEBI/HO/CFD/DIL2/COR/P/2019/85 dated July 26, 2019;
15. Bidders submitting an Application Form using the UPI Mechanism should ensure that: (a) the bank where the bank account linked to their UPI ID is maintained; and (b) the Mobile App and UPI handle being used for making the Bid is listed on the website of SEBI at https://www.sebi.gov.in/sebiweb/other/OtherAction.do?doRecognisedFpi=yes&intmId=40;
16. If the first Bidders is not the account holder, ensure that the Bid cum Application Form is signed by the account holder. Ensure that you have mentioned the correct bank account number in the Bid cum Application Form;
17. QIBs and Non-Institutional Bidders should submit their Bids through the ASBA process only. Pursuant to SEBI circular dated November 01, 2018, and July 26, 2019.
18. Ensure that you request for and receive a stamped acknowledgement of the Bid cum Application Form for all your Bid options;
19. Submit revised Bids to the same Designated Intermediary, through whom the original Bid is placed and obtain a revised acknowledgement;
20. Except for Bids (i) on behalf of the Central or State Governments and the officials appointed by the courts, who, in terms of a SEBI circular dated June 30, 2008, may be exempt from specifying their PAN for transacting in the securities market, and (ii) Bids by persons resident in the state of Sikkim, who, in terms of a SEBI circular dated July 20, 2006, may be exempted from specifying their PAN for transacting in the securities market, all Bidders should mention their PAN allotted under the I.T. Act. The exemption for the Central or the State Government and officials appointed by the courts and for investors residing in the State of Sikkim is subject to (a) the Demographic Details received from the respective depositories confirming the exemption granted to the beneficiary owner by a suitable description in the PAN field and the beneficiary account remaining in "active status"; and (b) in the case of residents of Sikkim, the address as per the Demographic Details evidencing the same. All other applications in which PAN is not mentioned will be rejected;
21. FPIs making MIM Bids using the same PAN, and different beneficiary account numbers, Client IDs and DP IDs, are required to submit a confirmation that their Bids are under the MIM structure and indicate the name of their investment managers in such confirmation which shall be submitted along with each of their Bid cum Application Forms. In the absence of such confirmation from the relevant FPIs, such MIM Bids shall be rejected;
22. Ensure that the Demographic Details are updated, true and correct in all respects;
23. Ensure that thumb impressions and signatures other than in the languages specified in the Eighth Schedule to the Constitution of India are attested by a Magistrate or a Notary Public or a Special Executive Magistrate under official seal;
24. Ensure that the category and the investor status is indicated;
25. Ensure that in case of Bids under power of attorney or by limited companies, corporates, trust etc., relevant documents are submitted;
26. Ensure that Bids submitted by any person outside India should be in compliance with applicable foreign and Indian laws;
27. Bidders should note that in case the DP ID, Client ID and PAN mentioned in their Bid cum Application Form and entered into the online IPO system of the Stock Exchange by the relevant Designated Intermediary, as the case may be, do not match with the DP ID, Client ID and PAN available in the Depository database, then such Bids are liable to be rejected. Where the Bid cum Application Form is submitted in joint names, ensure that the beneficiary account is also held in the same joint names and such names are in the same sequence in which they appear in the Bid cum Application Form;

28. Ensure that the Bid cum Application Forms are delivered by the Bidders within the time prescribed as per the Bid cum Application Form and the Red Herring Prospectus;
29. Ensure that you have correctly signed the authorization/undertaking box in the Bid cum Application Form, or have otherwise provided authorization to the SCSB via the electronic mode, for blocking funds in the ASBA
30. Bidders shall ensure that details of the Bid are reviewed and verified by opening the attachment in the UPI Mandate Request and then proceed to authorize the UPI Mandate Request using his/her UPI PIN. Upon the authorization of the mandate using his/her UPI PIN, a Bidders may be deemed to have verified the attachment containing the application details of the Individual Investors in the UPI Mandate Request and have agreed to block the entire Bid Amount and authorized the Sponsor Bank to block the Bid Amount mentioned in the Bid cum Application Form;
31. Bidders using the UPI Mechanism, who have revised their Bids subsequent to making the initial Bid, should also approve the revised Mandate Request generated by the Sponsor Bank to authorize the blocking of funds equivalent to the revised Bid Amount and subsequent debit of funds in case of Allotment in a timely manner; and
32. The ASBA Bidders are required to ensure that bids above ₹ 5,00,000, are uploaded only by the SCSBs;
33. UPI Bidders bidding using the UPI Mechanism are required to mention valid UPI ID of only the Bidder (in case of a single account) and of the first bidder (in case of a joint account) in the Bid cum Application Form;
34. Ensure that Anchor Investors submit their Bid cum Application Forms only to the BRLM.
    Ensure that their PAN is linked with Aadhaar and are in compliance with the notification issued by Central Board of Direct Taxes on February 13, 2020, and press release dated June 25, 2021, and September 17, 2021, CBDT circular no.7 of 2022, dated March 30, 2022, read with press release dated March 28, 2023, read with subsequent circulars issued in relation thereto.

The Bid cum Application Form is liable to be rejected if the above instructions, as applicable, are not complied with. Application made using incorrect UPI handle or using a bank account of an SCSB or SCSBs which is not mentioned in the Annexure 'A' to the SEBI circular no. SEBI/HO/CFD/DIL2/CIR/P/2019/85 dated July 26, 2019 is liable to be rejected.

Don'ts:

1. Do not apply for lower than the minimum Application Size;
2. Do not submit a Bid using UPI ID, if you are not a UPI Bidder;
3. Do not Bid for a Bid Amount exceed ₹500,000 by UPI Bidders;
4. Do not Bid on another Bid cum Application Form and the Anchor Investor Application Form, as the case maybe, after you have submitted a Bid to any of the Designated Intermediary;
5. Do not apply/ revise the Bid amount less than the Floor Price or higher than the Cap Price mentioned herein or in the Bid Cum Application Form;
6. Do not pay the Application Amount in cash, by money order, cheques, demand drafts, postal order, stock investment or any mode, other than blocked amounts in the bank account maintained with SCSB;
7. Bidders should not submit a Bid using the UPI Mechanism, unless the name of the bank where the bank account linked to your UPI ID is maintained, is listed on the website of the SEBI at https://www.sebi.gov.in/sebiweb/other/OtherAction.do?doRecognisedFpi=yes&intmId=40;
8. Bidders should not submit a Bid using the UPI Mechanism, using a Mobile App or UPI handle, not listed on
   the website of SEBI at https://www.sebi.gov.in/sebiweb/other/OtherAction.do?doRecognisedFpi=yes&intmId=40
9. Do not send Bid Cum Application Forms by post; instead submit the same to the Designated Intermediary only;
10. Do not Bid at Cut-off Price;
11. Do not submit the Bid Cum Application Forms to any non-SCSB bank or our Company;
12. Do not apply on Bid Cum Application Form that does not have the stamp of the relevant Designated Intermediary;
13. Do not instruct your respective Banks to release the funds blocked in the ASBA Account under the ASBA process;
14. Do not submit more than one Bid Cum Application Form;
15. Do not submit the Bid for an amount more than the funds available in your ASBA Account;

16. Do not fill up the Bid Cum Application Form such that the Equity Shares applied for exceeds the issue size and / or investment limit or maximum number of the Equity Shares that can be held under the applicable laws or regulations or maximum amount permissible under the applicable regulations or under the terms of the Red Herring Prospectus;
17. Do not Bid for Equity Shares more than specified by the Stock Exchange for each category;
18. Do not make the Bid cum Application Form using a third-party bank account or using a third-party linked bank account UPI ID;
19. Anchor Investors should not bid through the ASBA process;
20. Do not submit the General Index Register number instead of the PAN as the application is liable to be rejected on this ground;
21. If you are a QIB, do not submit your Bid after 04:00 p.m. on the QIB Bid/Issue Closing Date;
22. Do not withdraw your Bid or lower the size of your Bid (in terms of quantity of the Equity Shares or the Bid Amount) at any stage;
23. Do not submit Bids to a Designated Intermediary at a location other than at the relevant Bidding Centres. If you are a UPI Bidder and are using the UPI mechanism, do not submit the ASBA Form directly with SCSBs;
24. Do not submit incorrect details of the DP ID, Client ID and PAN or provide details for a beneficiary account which is suspended or for which details cannot be verified by the Registrar to the issue;
25. Do not submit applications on plain paper or incomplete or illegible Bid cum Application Forms in a color prescribed for another category of Bidders;
26. All investors submit their applications through the ASBA process only except as mentioned in SEBI Circular
    No. SEBI/HO/CFD/DCR2/CIR/P/2019/133 dated November 08, 2019 & SEBI/HO/CFD/DIL2/CIR/P/2021/2480/1/M dated March 16, 2021;
27. Do not apply if you are not competent to contract under the Indian Contract Act, 1872 (other than minors having valid depository accounts as per Demographic Details provided by the depository);
28. Do not link the UPI ID with a bank account maintained with a bank that is not UPI 2.0 certified by the NPCI in case of Applications submitted by Individual Investors using the UPI mechanism;
29. Do not Bid if you are an OCB;
30. The Bid Cum Application Form is liable to be rejected if the above instructions, as applicable, are not complied with.

Further, in case of any pre-issue or post issue related issues regarding share certificates / demat credit / refund orders / unblocking etc., investors can reach out to our Company Secretary and Compliance Officer. For details of our Company Secretary and Compliance Officer, *see the table titled "Brief Details of the Company" under the chapter titled "General Information" beginning on page no. 69 of this Draft Red Herring Prospectus.*

INSTRUCTIONS FOR COMPLETING THE BID CUM APPLICATION FORM

The Bids should be submitted on the prescribed Bid Cum Application Form and in BLOCK LETTERS in ENGLISH only in accordance with the instructions contained herein and in the Bid Cum Application Form. Bids not so made are liable to be rejected. Bid Cum Application forms submitted to the SCSBs should bear the stamp of respective intermediaries to whom the Bid cum application form submitted. Bid Cum Application form submitted directly to the SCSBs should bear the stamp of the SCSBs and/or the Designated Branch. Bid Cum Application forms submitted by Bidders whose beneficiary account is inactive shall be rejected.

SEBI, vide Circular No. CIR/CFD/14/2012 dated October 04, 2012, has introduced an additional mechanism for investors to submit application forms in public issues using the stock broker (broker) network of Stock Exchange, who may not be syndicate members in an issue with effect from January 01, 2013. The list of Broker Centre is available on the website of NSE i.e. www.nseindia.com With a view to broad base the reach of Investors by substantial, enhancing the points for submission of applications, SEBI vide Circular No. CIR/CFD/POLICY CELL/11/2015 dated November 10, 2015 has permitted Registrar to the Issue and Share Transfer Agent and Depository Participants registered with SEBI to accept the Bid Cum Application Forms in Public Issue with effect front January 01, 2016. The List of ETA and DPs centres for collecting the application shall be disclosed is available on the website of NSE i.e. www.nseindia.com.

Bidders may note that forms not filled completely or correctly as per instructions provided in this Draft Red Herring Prospectus, the General Information Document which shall be made available on the website of the Stock Exchange, the Issuer and the BRLM, are liable to be rejected. Instructions to fill each field of the Bid Cum Application Form can be found on the reverse side of the Bid Cum Application Form.

BIDDER'S DEPOSITORY ACCOUNT AND BANK DETAILS

Please note that, providing bank account details, PAN No's, Client ID and DP ID in the space provided in the Bid cum application form is mandatory and Bids that do not contain such details are liable to be rejected.

Bidders should note that on the basis of name of the Bidders, Depository Participant's name, Depository Participant Identification number and Beneficiary Account Number provided by them in the Bid cum Application Form, the Registrar to the issue will obtain from the Depository the demographic details including address, Bidders' bank account details, MICR code and occupation (hereinafter referred to as Demographic Details'). Bidders should carefully fill in their Depository Account details in the Bid cum Application Form.

These Demographic Details would be used for all correspondence with the Bidders including mailing of the CANs / Allocation Advice. The Demographic Details given by Bidders in the Bid cum Application Form would not be used for any other purpose by the Registrar to the issue.

By signing the Bid Cum Application Form, the Bidders would be deemed to have authorized the depositories to provide, upon request, to the Registrar to the issue, the required Demographic Details as available on its records.

METHOD OF ALLOTMENT AS MAY BE PRESCRIBED BY SEBI FROM TIME TO TIME

Our Company will not make any Allotment in excess of the Equity Shares issued through the Issue through the Red Herring Prospectus except in case of oversubscription for the purpose of rounding off to make Allotment, in consultation with the Designated Stock Exchange. Further, upon oversubscription, an Allotment of not more than 1% of the Issue to public may be made for the purpose of making Allotment in minimum lots. The allotment of Equity Shares to Bidders other than to the Individual Investors, Non-Institutional Investors shall be on a proportionate basis within the respective investor categories and the number of securities allotted shall be rounded off to the nearest integer, subject to minimum allotment being equal to the minimum application size as determined and disclosed. The allotment of Equity Shares to each Individual Investors shall not be less than the minimum lot, subject to the availability of shares in Individual Investors Portion, and the remaining available shares, if any, shall be allotted on a proportionate basis. The allotment to each Non-Institutional Investors shall not be less than the Minimum NII Application Size, subject to the availability of Equity Shares in the Non-Institutional Portion, and the remaining Equity Shares, if any, shall be allotted on a proportionate basis. SEBI ICDR Regulations.

PAYMENT BY STOCK INVEST

In terms of the Reserve Bank of India Circular No. DBOD No. FSC BC 42/ 24.47.00/ 2003-04 dated November 5, 2003; the option to use the stock invest instrument in lieu of cheques or bank drafts for payment of Application money has been withdrawn. Hence, payment through stock invest would not be accepted in this Issue.

PAYMENT INTO ESCROW ACCOUNT(S) FOR ANCHOR INVESTORS

Our Company, in consultation with the BRLM, in its absolute discretion, will decide the list of Anchor Investors to whom the CAN will be sent, pursuant to which the details of the Equity Shares allocated to them in their respective names will be notified to such Anchor Investors. Anchor Investors are not permitted to Bid on the Issue through the ASBA process. Instead, Anchor Investors are required to transfer the Bid Amount (through direct credit, real-time gross settlement ("RTGS") or national electronic fund transfer ("NEFT") to the Escrow Account(s). For Anchor Investors, the payment instruments for payment into the Escrow Account should be drawn in favor of:

In case of resident Anchor Investors: "[●]"; and
In case of Non-Resident Anchor Investors: "[●]".

Anchor Investors should note that the escrow mechanism is not prescribed by the SEBI and has been established as an arrangement between our Company and the Syndicate, if any the Escrow Collection Bank and the Registrar to the issue to facilitate collections of Bid amounts from Anchor Investors.

OTHER INSTRUCTIONS FOR BIDDERS

JOINT BIDS IN THE CASE OF INDIVIDUALS

In the case of Joint Bids, the Bids should be made in the name of the Bidders whose name appears first in the Depository account. The name so entered should be the same as it appears in the Depository records. The signature of only such first Bidders would be required in the Bid cum Application Form and such first Bidder would be deemed to have signed on behalf of the joint holders. All payments may be made out in favour of the Bidder whose name appears in the Bid cum Application Form or the Revision Form and all communications may be addressed to such Bidder and may be dispatched to his or her address as per the Demographic Details received from the Depositories.

Applications may be made in single or joint names (not more than three). In the case of joint Applications, all payments will be made out in favour of the Bidder whose name appears first in the Bid cum Application Form or Revision Form. All communications will be addressed to the First Bidder and will be dispatched to his or her address as per the Demographic Details received from the Depository.

MULTIPLE BIDS

A Bidder should submit only one Application (and not more than one) for the total number of Equity shares required. Two or more Applications will be deemed to be multiple Applications if the sole or First Bidder is one and the same.

In this regard, the procedures which would be followed by the Registrar to the Issue to detect multiple applications are given below:

I. All applications are electronically strung on first name, address (1st line) and Bidder's status. Further, these applications are electronically matched for common first name and address and if matched, these are checked manually for age, signature and father/ husband's name to determine if they are multiple applications.

II. Applications which do not qualify as multiple applications as per above procedure are further checked for common DP ID/ beneficiary ID. In case of applications with common DP ID/ beneficiary ID, are manually checked to eliminate possibility of data entry error to determine if they are multiple applications.

III. Applications which do not qualify as multiple applications as per above procedure are further checked for common PAN. All such matched applications with common PAN are manually checked to eliminate possibility of data capture error to determine if they are multiple applications.

In case of a mutual fund, a separate Application can be made in respect of each scheme of the mutual fund registered with SEBI and such Applications in respect of more than one scheme of the mutual fund will not be treated as multiple Applications provided that the Applications clearly indicate the scheme concerned for which the Application has been made.

In cases where there are more than 20 (Twenty) valid applications having a common address, such shares will be kept in abeyance, post allotment and released on confirmation of "know your client" norms by the depositories. The Company reserves the right to reject, in its absolute discretion, all or any multiple Applications in any or all categories.

After submitting an ASBA Application or Application through UPI Mechanism either in physical or electronic mode, a Bidder cannot apply (either in physical or electronic mode) to either the same or another Designated Branch of the SCSB. Submission of a second Application in such manner will be deemed a multiple Application and would be rejected.

An investor making application using any of channels under UPI Payments Mechanism, shall use only his / her own bank account or only his / her own bank account linked UPI ID to make an application in public issues. Applications made using third party bank account or using third party linked bank account UPI ID are liable for rejection. Sponsor Bank shall provide the investors UPI linked bank account details to RTA for purpose of reconciliation. RTA shall undertake technical rejection of all applications to reject applications made using third party bank account.

Duplicate copies of Bid cum Application Forms downloaded and printed from the website of the Stock Exchange bearing the same application number shall be treated as multiple applications and are liable to be rejected. The Company, in consultation with the Book Running Lead Manager reserves the right to reject, in its absolute discretion, all or any multiple applications in any or all categories. In this regard, the procedure which would be followed by the Registrar to the Issue to detect multiple applications is given below:

1. All Applications will be checked for common PAN. For Bidders other than Mutual Funds and FII sub-accounts, Applications bearing the same PAN will be treated as multiple Applications and will be rejected.
2. For Applications from Mutual Funds and FII sub-accounts, submitted under the same PAN, as well as Applications on behalf of the Bidders for whom submission of PAN is not mandatory such as the Central or State Government, an official liquidator or receiver appointed by a court and residents of Sikkim, the Bid Cum Application Forms will be checked for common DP ID and Client ID.

PERMANENT ACCOUNT NUMBER OR PAN

Pursuant to the circular MRD/DoP/Circ 05/2007 dated April 27, 2007, SEBI has mandated Permanent Account Number ("PAN") to be the sole identification number for all participants transacting in the securities market, irrespective of the amount of the transaction w.e.f. July 2, 2007. Each of the Bidder should mention his/her PAN allotted under the Income Tax Act, 1961. Bid submitted without the PAN will be considered incomplete and are liable to be rejected. It is to be specifically noted that Bidders should not submit the General Index Registration ("GIR") number instead of the PAN, as the Application is liable to be rejected on this ground.

Our Company/ Registrar to the Issue/ Book Running Lead Manager can, however, accept the Application(s) in which PAN is wrongly entered into by ASBA SCSB's in the ASBA system, without any fault on the part of Bidder.

RIGHT TO REJECT BIDS

In case of QIB Bidders, the Company in consultation with the Book Running Lead Manager may reject Bids provided that the reasons for rejecting the same shall be provided to such Bidder in writing. In case of non-institutional Bidder, Individual Investors who applied, the Company has a right to reject Bids based on technical grounds.

GROUNDS FOR TECHNICAL REJECTIONS

Bidders are advised to note that Bids are liable to be rejected inter alia on the following technical grounds:

1. Bids submitted without instruction to the SCSBs to block the entire Application Amount;
2. Bids which do not contain details of the Bid Amount and the bank account details in the ASBA Form;
3. Bids submitted on a plain paper;
4. Bids submitted by Individual Investors using the UPI Mechanism through an SCSBs and/or using a mobile application or UPI handle, not listed on the website of SEBI;
5. Bids under the UPI Mechanism submitted by Individual Investors using third party bank accounts or using a third party linked bank account UPI ID (subject to availability of information regarding third party account from Sponsor Bank);
6. ASBA Form submitted to a Designated Intermediary does not bear the stamp of the Designated Intermediary;
7. Bids submitted without the signature of the First Bidder or sole Bidder;
8. The ASBA Form not being signed by the account holders, if the account holder is different from the Bidder;
9. Bids by persons for whom PAN details have not been verified and whose beneficiary accounts are "suspended for credit" in terms of SEBI circular CIR/MRD/DP/ 22 /2010 dated July 29, 2010;
10. GIR number furnished instead of PAN;
11. Bids by Individual Investors with Bid Amount of a value of less than Minimum Application Size;
12. Bids by persons who are not eligible to acquire Equity Shares in terms of all applicable laws, rules, regulations, guidelines and approvals;
13. Bids accompanied by stock invest, money order, postal order or cash; and
14. Bids uploaded by QIBs after 4.00 pm on the QIB Bid/ Issue closing Date and by Non-Institutional Bidders uploaded after 4.00 p.m. on the Bid/ Issue closing Date, and Bids by Individual Investors uploaded after 5.00 p.m. on the Bid/ Issue closing Date, unless extended by the Stock Exchange.
15. Applications by OCBs;

For details of grounds for technical rejections of an Bid cum Application Form, please see the chapter titled "General Information Document".

EQUITY SHARES IN DEMATERIALIZED FORM WITH NSDL OR CDSL

To enable all shareholders of our Company to have their shareholding in electronic form, our Company is in process of entering into following tripartite agreements with the Depositories and the Registrar and Share Transfer Agent:

1. Tripartite agreement dated June 02, 2026, between our Company, NSDL and the Registrar and Share Transfer Agent to the Issue.
2. Tripartite agreement dated June 15, 2026, between our Company, CDSL and the Registrar and Share Transfer Agent to the Issue.
3. Our Company's shares bear an ISIN: INE1NVJ01026

NAMES OF ENTITIES RESPONSIBLE FOR FINALISING THE BASIS OF ALLOTMENT IN A FAIR AND PROPER MANNER

The authorized employees of the Stock Exchange, along with the Book Running Lead Manager and the Registrar to the Issue, shall ensure that the Basis of Allotment is finalized in a fair and proper manner in accordance with the procedure specified in SEBI ICDR Regulations.

COMMUNICATIONS

All future communications in connection with Bids made in this Issue should be addressed to the Registrar to the Issue quoting the full name of the sole or First Bidder, Bid Cum Application Form number, Bidders Depository Account Details, number of Equity Shares applied for, date of Bid Cum Application form, name and address of the Banker to the Issue where the Bid was submitted and a copy of the acknowledgement slip.

Investors can contact the Compliance Officer or the Registrar to the Issue in case of any pre issue or post issue related problems such as non-receipt of letters of allotment, credit of allotted shares in the respective beneficiary accounts, etc. at below mentioned addresses:

Company Secretary & Compliance officer	Registrar to the Issue
Pearl Santosh Dsouza **Company Secretary & Compliance officer** **Address:** Block Number 1 and 4 Floor No-1 and 2 Survey No 120, Plot No 4 & C.T.S. Number 5343 Sambhaji Nagar Behind DIC, Osmanabad, Maharashtra, India,413501 **Contact No:** +91 8669522424 **Email ID:** cs@shreesiddhivinayakgreentech.com	**Mas Services Limited** **CIN:** U74899DL1973PLC006950 **Address:** T-34, 2nd Floor, Okhla Industrial Area, Phase-II, New Delhi-110020 **Tel. No.:** 011-26387281 **E-mail ID:** ipo@masserv.com **Investor Grievance Email ID:** investor@masserv.com **Contact person:** Mr. N.C. Pal **Website:** www.masserv.com **SEBI Regn. No.:** INR000000049

DISPOSAL OF BIDS AND APPLICATION MONEYS AND INTEREST IN CASE OF DELAY

The Company shall ensure the dispatch of Allotment advice, instructions to SCSBs and give benefit to the beneficiary account with Depository Participants and submit the documents pertaining to the Allotment to the Stock Exchange within one working day of the date of Allotment of Equity Shares.

The Company shall make best efforts that all steps for completion of the necessary formalities for listing and commencement of trading at NSE Emerge where the Equity Shares are proposed to be listed are taken within 3(three) working days of closure of the issue.

In accordance with the Companies Act, the requirements of the Stock Exchange and the SEBI Regulations, the Company further undertakes that:

- Allotment and Listing of Equity Shares shall be made within 3 (three) days of the Issue Closing Date;
- Giving of Instructions for refund by unblocking of amount via ASBA not later than 2 (two) working days of the Issue Closing Date, would be ensured; and

- If such money is not repaid within prescribed time from the date our Company becomes liable to repay it, then our Company and every officer in default shall, on and from expiry of prescribed time, be liable to repay such application money, with interest as prescribed under SEBI (ICDR) Regulations, the Companies Act, 2013 and applicable law. Further, in accordance with Section 40 of the Companies Act, 2013, the Company and each officer in default may be punishable with fine and/or imprisonment in such a case.

INVESTOR GRIEVANCE

In case of any pre-Issue or post- Issue related issues regarding share certificates/demat credit/refund orders/unblocking etc., investors shall reach out the Company Secretary and Compliance Officer. *For details of the Company Secretary and Compliance Officer, please refer to the chapter titled "General Information" beginning on page 69 of this Draft Red Herring Prospectus.*

SEBI vide its master circular no. SEBI/HO/CFD/PoD-2/P/CIR/2023/00094 dated June 21, 2023, has reduced the timelines for refund of Application money to two days. In case of any delay in unblocking of amounts in the ASBA Accounts (including amounts blocked through the UPI Mechanism) exceeding two Working Days from the Issue Closing Date, the Bidder shall be compensated at a uniform rate of ₹100/- per day for the entire duration of delay exceeding two Working Days from the Issue Closing Date by the intermediary responsible for causing such delay in unblocking. The BRLM shall, in their sole discretion, identify and fix the liability on such intermediary or entity responsible for such delay in unblocking.

IMPERSONATION

Attention of the bidders is specifically drawn to the provisions of section 38(1) of the Companies Act, 2013 which is reproduced below:

Any person who:

a) makes or abets making of an application in a fictitious name to a company for acquiring, or subscribing for, its securities; or

b) makes or abets making of multiple applications to a company in different names or in different combinations of his name or surname for acquiring or subscribing for its securities; or

c) Otherwise induces directly or indirectly a company to allot, or register any transfer of, securities to him, or to any other person in a fictitious name,

shall be liable for action under section 447 of Companies Act, 2013 and shall be treated as Fraud.

The liability prescribed under Section 447 of the Companies Act, for fraud involving an amount of at least ₹10 Lakhs or 1% of the turnover of the company, whichever is lower, includes imprisonment for a term which shall not be less than 6 (six) months extending up to 10 (ten) years and fine of an amount not less than the amount involved in the fraud, extending up to three times such amount (provided that where the fraud involves public interest, such term shall not be less than three years.) Further, where the fraud involves an amount less than ₹10 Lakhs or 1% of the turnover of the company, whichever is lower, and does not involve public interest, any person guilty of such fraud shall be punishable with imprisonment for a term which may extend to five years or with fine which may extend to ₹50 Lakhs or with both.

ALLOTMENT PROCEDURE AND BASIS OF ALLOTMENT

The Allotment of Equity Shares to Bidders other than Individual Investors and Anchor Investors may be on proportionate basis. No Individual Investor will be Allotted less than the minimum Bid Lot subject to availability of shares in Individual Investor Category and the remaining available shares, if any will be Allotted on a proportionate basis.

ALLOTMENT PROCEDURE

As per SEBI ICDR Regulation 268:

a. The issuer shall not make an allotment pursuant to a public issue if the number of allottees in an initial public offer is less than 200 (Two Hundred).

b. The issuer shall not make any allotment in excess of the specified securities issued through the Issue document except in case of oversubscription for the purpose of rounding off to make allotment, in consultation with the designated stock exchange. Provided that in case of oversubscription, an allotment of not more than ten percent of the net issue to public may be made for the purpose of making allotment in minimum lots.

c. The allotment of specified securities to Bidders other than individual investors who applies for minimum application size, non-institutional investors and anchor investors shall be on proportionate basis within the specified investor categories and the number of securities allotted shall be rounded off to the nearest integer, subject to minimum allotment being equal to the minimum application size as determined and disclosed in the issue document:

d. Subject to the availability of shares in non-institutional investors' category, the allotment of specified securities to each non-institutional investor shall not be less than the minimum application size in non-institutional investor category, and the remaining shares, if any, shall be allotted on a proportionate basis in accordance with the conditions specified in this regard in Schedule XIII of these regulations.

e. The Authorised employees of the Designated Stock Exchange, along with the Book Running Lead Manager and Registrar to the Issue, shall ensure that the basis of allotment is finalized in a fair and proper manner in accordance with the SEBI (ICDR) Regulations, 2018.

BASIS OF ALLOTMENT

a) For Individual Investors

Bids received from the Individual Investors at or above the Issue Price shall be grouped together to determine the total demand under this category. The Allotment to all the successful Individual Investors will be made at the Issue Price.

The Issue size less Allotment to Non-Institutional and QIB Bidders shall be available for Allotment to Individual Investors who have Bid in the Issue at a price that is equal to or greater than the Issue Price. If the aggregate demand in this category is less than or equal to [●] Equity Shares of the face value of ₹ 10/- each at or above the Issue Price, full Allotment shall be made to the Individual Investors to the extent of their valid Bids.

If the aggregate demand in this category is greater than [●] Equity Shares of the face value of ₹10/- each at or above the Issue Price, the Allotment shall be made on a proportionate basis up to a minimum of [●] Equity Shares of face value of ₹10/- each and in multiples of [●] Equity Shares of face value of ₹10/- each thereafter. For the method of proportionate Basis of Allotment, refer below.

b) For Non-Institutional Bidders

Bids received from Non-Institutional Bidders at or above the Issue Price shall be grouped together to determine the total demand under this category. The Allotment to all successful Non-Institutional Bidders will be made at the Issue Price.

The Issue Size less allotment to QIBs and Individual Investors shall be available for Allotment to Non-Institutional Bidders who have Bid in the Issue at a price that is equal to or greater than the Issue Price. If the aggregate demand in this category is less than or equal to [●] Equity Shares of the face value of ₹10/- each at or above the Issue Price, full Allotment shall be made to Non-Institutional Bidders to the extent of their demand.

In case the aggregate demand in this category is greater than [●] Equity Shares of the face value of ₹10/- each at or above the Issue Price, Allotment shall be made on a proportionate basis up to a minimum of [●] Equity

Shares of the face value of ₹10/- each and in multiples of [●] Equity Shares of the face value of ₹10/- each thereafter. For the method of proportionate Basis of Allotment refer below.

c) For QIBs

Bids received from QIBs Bidding in the QIB Category (net of Anchor Portion) at or above the Issue Price may be grouped together to determine the total demand under this category. The QIB Category may be available for Allotment to QIBs who have Bid at a price that is equal to or greater than the Issue Price. Allotment may be undertaken in the following manner: Allotment shall be undertaken in the following manner:

1. In the first instance allocation to Mutual Funds for [●] % of the QIB Portion shall be determined as follows:

    - In the event that Bids by Mutual Funds exceeds [●]% of the QIB Portion, allocation to Mutual Funds shall be done on a proportionate basis for [●]% of the QIB Portion.

    - In the event that the aggregate demand from Mutual Funds is less than [●]% of the QIB Portion then all Mutual Funds shall get full Allotment to the extent of valid Bids received above the Issue Price.

    - Equity Shares remaining unsubscribed, if any, not allocated to Mutual Funds shall be available for Allotment to all QIB Bidders as set out in (2) below;

2. In the second instance Allotment to all QIBs shall be determined as follows:

    - In the event that the oversubscription in the QIB Portion, all QIB Bidders who have submitted Bids above the Issue Price shall be allotted Equity Shares of face value of ₹10/- each on a proportionate basis, up to a minimum of [●] Equity Shares of face value of ₹10/- each and in multiples of [●] Equity Shares thereafter for [●]% of the QIB Portion.

    - Mutual Funds, who have received allocation as per(a) above, for less than the number of Equity Shares Bid for by them, are eligible to receive Equity Shares on a proportionate basis, up to a minimum of [●] Equity Shares of face value of ₹10/- each and in multiples of [●] Equity Shares of face value of ₹10/- each thereafter, along with other QIB Bidders.

    - Under-subscription below [●]% of the QIB Portion, if any, from Mutual Funds, would be included for allocation to the remaining QIB Bidders on a proportionate basis. The aggregate Allotment to QIB Bidders shall not be more than [●] Equity Shares of face value of ₹10/- each.

d) Allotment to Anchor Investor

1. Allocation of Equity Shares to Anchor Investors at the Anchor Investor Allocation Price will be at the discretion of the Issuer, in consultation with the BRLM, subject to compliance with the following requirements:

    - not more than 60% of the QIB Portion will be allocated to Anchor Investors;

    - of which 40% of the Anchor Investor Portion shall be reserved as: 33.33% for domestic Mutual Funds and 6.67% for life insurance companies and pension funds, subject to valid Bids being received at or above the price at which allocation is being done to other Anchor Investors; and allocation to Anchor Investors shall be on a discretionary basis and subject to:

a) a maximum number of 2 Anchor Investors for allocation up to ₹2 crores;

b) a minimum number of Anchor Investors and a maximum number of 15 Anchor Investors for allocation of more than ₹2 crores and up to ₹25 crores subject to minimum allotment of ₹1 crores per such Anchor Investor; and

c) in case of allocation above twenty-five crore rupees; a minimum of 5 such investors and a maximum of 15 such investors for allocation up to twenty-five crore rupees and an additional 10 such investors for every additional twenty-five crore rupees or part thereof, shall be permitted, subject to a minimum allotment of one crore rupees per such investor.

2. A physical book is prepared by the Registrar on the basis of the Anchor Investor Application Forms received from Anchor Investors. Based on the physical book and at the discretion of the Issuer, in consultation with the BRLM, selected Anchor Investors will be sent a CAN and if required, a revised CAN.

3. In the event that the Issue Price is higher than the Anchor Investor Allocation Price:

   Anchor Investors will be sent a revised CAN within one day of the Pricing Date indicating the number of Equity Shares allocated to such Anchor Investor and the pay-in date for payment of the balance amount. Anchor Investors are then required to pay any additional amounts, being the difference between the Issue Price and the Anchor Investor Allocation Price, as indicated in the revised CAN within the pay- in date referred to in the revised CAN. Thereafter, the Allotment Advice will be issued to such Anchor Investors.

4. In the event the Issue Price is lower than the Anchor Investor Allocation Price:

   Anchor Investors who have been Allotted Equity Shares will directly receive Allotment Advice.

5. Basis of Allotment for QIBs (other than Anchor Investors) and NIIs in case of Over Subscribed Issue:

   In the event of the Issue being Over-Subscribed, the Issuer may finalize the Basis of Allotment in consultation with the NSE (The Designated Stock Exchange). The allocation may be made in marketable lots on a proportionate basis as set forth hereunder:

a) The total number of Shares to be allocated to each category as a whole shall be arrived at on a proportionate basis i.e., the total number of Shares applied for in that category multiplied by the inverse of the oversubscription ratio (number of Bidders in the category multiplied by the number of Shares applied for).

b) The number of Shares to be allocated to the successful Bidders will be arrived at on a proportionate basis in marketable lots (i.e., Total number of Shares applied for into the inverse of the over subscription ratio).

c) For Bids where the proportionate allotment works out to less than [●] Equity Shares of the face value of ₹10/- each the allotment will be made as follows:

   - Each successful Bidder shall be allotted [●] Equity Shares of face value of ₹10/- each; and

   - The successful Bidder out of the total bidders for that category shall be determined by drawing lots in such a manner that the total number of Shares allotted in that category is equal to the number of Shares worked out as per (b) above.

6. If the proportionate allotment to a Bidder works out to a number that is not a multiple of [●] Equity Shares of face value of ₹10/- each, the Bidder would be allotted Shares by rounding off to the nearest multiple of [●] Equity Shares of face value of ₹10/- subject to a minimum allotment of [●] Equity Shares of face value of ₹10/- each.

7. If the Shares allotted on a proportionate basis to any category is more than the Equity Shares allotted to the Bidders in that category, the balance available Shares or allocation shall be first adjusted against any category, where the allotted Shares are not sufficient for proportionate allotment to the successful Bidder in that category, the balance Shares, if any, remaining after such adjustment will be added to the category comprising Bidder applying for the minimum number of Shares. If as a result of the process of rounding off to the nearest multiple of [●] Equity Shares of face value of ₹10/- each, results in the actual allotment being higher than the shares issued, the final allotment may be higher at the sole discretion of the Board of Directors, up to 110% of the size of the Issue specified under the Capital Structure mentioned in this Draft Red Herring Prospectus.

BASIS OF ALLOTMENT IN THE EVENT OF UNDER SUBSCRIPTION

In the event of under subscription in the Issue, the obligations of the Underwriters shall get triggered in terms of the Underwriting Agreement. The Minimum subscription of 100% of the Issue size shall be achieved before our company proceeds to get the basis of allotment approved by the Designated Stock Exchange.

The Executive Director/Managing Director of the NSE Emerge the Designated Stock Exchange in addition to Book Running Lead Manager and Registrar to the Public Issue shall be responsible to ensure that the basis of allotment is finalized in a fair and proper manner in accordance with the SEBI (ICDR) Regulations, 2018.

Flow of events from the closure of Bidding period (T DAY) till Allotment:

- On T Day, RTA to validate the electronic bid details with the depository records and also reconcile the final certificates received from the Sponsor Bank for UPI process and the SCSBs for ASBA and Syndicate ASBA process with the electronic bid details.

- RTA identifies cases with mismatch of account number as per bid file / Final Certificate and as per Bidder's bank account linked to depository demat account and seek clarification from SCSB to identify the applications with third party account for rejection.

- Third party confirmation of applications to be completed by SCSBs on T+1 day.

- RTA prepares the list of final rejections and circulates the rejections list with BRLM(s)/ Company for their review/ comments.

- Post rejection, the RTA submits the basis of allotment with the Designated Stock Exchange (DSE).

- The DSE, post verification approves the basis and generates drawal of lots wherever applicable, through a random number generation software.

- The RTA uploads the drawal numbers in their system and generates the final list of allotees as per process mentioned below:

Process for generating list of allotees: -

- Instruction is given by RTA in their Software System to reverse category wise all the application numbers in the ascending order and generate the bucket /batch as per the allotment ratio. For example, if the application number is 78654321 then system reverses it to 12345687 and if the ratio of allottees to Bidders in a category is 2:7 then the system will create lots of 7. If the drawal of lots provided by Designated Stock Exchange (DSE) is 3 and 5 then the system will pick every 3rd and 5th application in each of the lot of the category and these applications will be allotted the shares in that category.

- In categories where there is proportionate allotment, the Registrar will prepare the proportionate working based on the oversubscription times.

- In categories where there is undersubscription, the Registrar will do full allotment for all valid applications.

- On the basis of the above, the RTA will work out the allotees, partial allotees and non- allottees, prepare the fund transfer letters and advice the SCSBs to debit or unblock the respective accounts.

UNDERTAKING BY OUR COMPANY

Our Company undertakes the following:

1. If our Company does not proceed with the Issue after the Issue Closing Date but before allotment, then the reason thereof shall be given as a public notice within two days of the Bid/Issue Closing Date. The public notice shall be issued in the same newspapers where the pre- issue advertisements were published. The stock exchanges on which the Equity Shares are proposed to be listed shall also be informed promptly;

2. that the complaints received in respect of this Issue shall be attended to by our Company expeditiously and satisfactorily;

3. That all steps will be taken for the completion of the necessary formalities for listing and commencement of trading at the Stock Exchange where the Equity Shares are proposed to be listed within 3 (Three) working days of closure of the Issue;

4. that funds required for making refunds/unblocking to unsuccessful bidders as per the mode(s) disclosed shall be made available to the Registrar to the Issue by us;

5. Where refunds (to the extent applicable) are made through electronic transfer of funds, a suitable communication shall be sent to the Bidder within the time prescribed under applicable law, giving details of the bank where refunds shall be credited along with amount and expected date of electronic credit of refund;

6. that no further issue of Equity Shares shall be made till the Equity Shares ed through the Red Herring Prospectus are listed or till the application monies are refunded on account of non-listing, under subscription etc.

7. that Company shall not have recourse to the Issue proceeds until the approval for trading of the Equity Shares from the Stock Exchange where listing is sought has been received.

8. Adequate arrangements shall be made to collect all Bids Supported by Blocked Amount while finalizing the Basis of Allotment; .

9. That the Promoters' contribution in full, if applicable, shall be brought in advance before the Issue opens for subscription

10. If Allotment is not made, bid monies will be refunded / unblocked in the ASBA Accounts within the time prescribed under applicable law or such lesser time as specified by SEBI, failing which interest will be due to be paid to the Bidders at the rate prescribed under the Companies Act, the SEBI ICDR Regulations and applicable law for the delayed period ;

11. That if our Company withdraw the Issue after the Issue Closing Date, our Company shall be required to file a fresh Issue document with the SEBI/RoC/Stock Exchange, in the event our Company subsequently decides to proceed with the Issue;

12. None of the promoters or directors of the company are a wilful defaulter under Section 5(c) of SEBI ICDR Regulations.

13. That our Company shall comply with such disclosure and accounting norms as may be specified by SEBI from time to time;

UTILIZATION OF ISSUE PROCEEDS

Our Board of Directors undertake the following:

1. All monies received out of issue of specified securities to the public shall be transferred to a separate bank account other than the bank account referred to in section 40(3) of the Companies Act, 2013;

2. Details of all monies utilised out of the issue referred to in sub-item (i) shall be disclosed and continue to be disclosed till the time any part of the issue proceeds remains unutilised under an appropriate separate head in the balance sheet of the issuer indicating the purpose for which such monies have been utilised; and

3. Details of all unutilised monies out of the issue of specified securities referred to in sub-item (i) shall be disclosed under an appropriate separate head in the balance sheet of the issuer indicating the form in which such unutilised monies have been invested.

4. Our Company shall comply with the requirements of SEBI LODR Regulations, in relation to the disclosure and monitoring of the utilization of the proceeds of the Issue; and

5. Our Company shall not have recourse to the Issue Proceeds until the approval for listing and trading of the Equity Shares from the Stock Exchange where listing is sought has been received.

The Book Running Lead Manager undertakes that the complaints or comments received in respect of the Issue shall be attended by our Company expeditiously and satisfactorily.

(The rest of the page is intentionally left blank)

RESTRITION ON FOREIGN OWENRSHIP OF INDIAN SECURITIES

Foreign investment in Indian securities is regulated through the Industrial Policy, 1991 of the Government of India and FEMA. While the Industrial Policy, 1991 prescribes the limits and the conditions subject to which foreign investment can be made in different sectors of the Indian economy, FEMA regulates the precise manner in which such investment may be made. Under the Industrial Policy, unless specifically restricted, foreign investment is freely permitted in all sectors of the Indian economy up to any extent and without any prior approvals, but the foreign investor is required to follow certain prescribed procedures for making such investment. The government bodies responsible for granting foreign investment approvals are the Reserve Bank of India ("RBI") and Department of Industrial Policy and Promotion, Ministry of Commerce and Industry, Government of India ("DIPP").

The Government has from time to time made policy pronouncements on FDI through press notes and press releases. The DPIIT issued, issued the Consolidated FDI Policy Circular of 2020 ("FDI Policy"), which, with effect from October 15, 2020, subsumes and supersedes all press notes, press releases, clarifications, circulars issued by the DPIIT, which were in force as on October 15, 2020. The FDI Policy will be valid until the DPIIT issues an updated circular.

The transfer of shares between an Indian resident and a non-resident does not require the prior approval of the RBI, provided that: (i) the activities of the investee company are under the automatic route under the foreign direct investment policy and transfer does not attract the provisions of the SEBI SAST Regulations; (ii) the non-resident shareholding is within the sectoral limits under the FDI policy; and (iii) the pricing is in accordance with the guidelines prescribed by the SEBI/RBI.

On October 17, 2019, Ministry of Finance, Department of Economic Affairs, had notified the Foreign Exchange Management (Non-debt Instruments) Rules, 2019 ("FEMA Rules"), which had replaced the Foreign Exchange Management (Transfer and Issue of Security by a Person Resident Outside India) Regulations 2017. Foreign investment in this Issue shall be on the basis of the FEMA Rules. Further, in accordance with Press Note No. 3 (2020 Series), dated April 17, 2020 issued by the DPIIT and the Foreign Exchange Management (Non-debt Instruments) Amendment Rules, 2020 which came into effect from April 22, 2020, any investment, subscription, purchase or sale of equity instruments by entities of a country which shares land border with India or where the beneficial owner of an investment into India is situated in or is a citizen of any such country, will require prior approval of the Government, as prescribed in the Consolidated FDI Policy and the FEMA Rules. Further, in the event of transfer of ownership of any existing or future foreign direct investment in an entity in India, directly or indirectly, resulting in the beneficial ownership falling within the aforesaid restriction/ purview, such subsequent change in the beneficial ownership will also require approval of the Government. Pursuant to the Foreign Exchange Management (Non-debt Instruments) (Fourth Amendment) Rules, 2020 issued on December 8, 2020, a multilateral bank or fund, of which India is a member, shall not be treated as an entity of a particular country nor shall any country be treated as the beneficial owner of the investments of such bank of fund in India.

As per the FEMA Rules, FDI in companies engaged in the sector in which our Company operates, is permitted under automatic route for a limit of up to 100% of the paid-up share capital of company.

As per the existing policy of the Government of India, OCBs cannot participate in this issue. *For further details, see the chapter titled "Issue Procedure" beginning on page 328 of this Draft Red Herring Prospectus*.

Each Investor should seek independent legal advice about its ability to participate in the issue. In the event such prior approval of the Government of India is required, and such approval has been obtained, the Investor shall intimate our Company and the Registrar in writing about such approval along with a copy thereof within the issue period.

The Equity Shares issued in the issue have not been and will not be registered under the U.S. Securities Act or any state securities laws of the United States and, unless so registered, may not be issued or sold within the United States, except pursuant to an exemption from, or in a transaction not subject to, the registration requirements of the U.S. Securities Act and applicable state securities laws of the United States. Accordingly, the Equity Shares are only being issued and sold only outside the United States in offshore transactions in compliance with Regulation S under the U.S. Securities Act and the applicable laws of the jurisdictions where those issues and sales occur.

The Equity Shares have not been and will not be registered, listed or otherwise qualified in any other jurisdiction outside India and may not be issued or sold, and Bids may not be made by persons in any such jurisdiction, except in compliance with the applicable laws of such jurisdiction.

The above information is given for the benefit of the Investors. Our Company and the Book running Lead Manager are not liable for any amendments or modification or changes in applicable laws or regulations, which may occur after the date of this Draft Red Herring Prospectus. Investors are advised to make their independent investigations, seek independent legal advice about its ability to participate in the issue and ensure that the number of Equity Shares applied for do not exceed the applicable limits under laws or regulations.

Investment by Foreign Portfolio Investors

The total holding by each FPI or an investor group, shall be less than 10 percent of the total paid-up equity capital on a fully diluted basis or less than 10 percent of the paid-up value of each series of debentures or preference shares or share warrants issued by an Indian company and the total holdings of all FPIs put together, including any other direct and indirect foreign investments in the Indian company permitted under these rules, shall not exceed 24 per cent of paid-up equity capital on a fully diluted basis or paid-up value of each series of debentures or preference shares or share warrants. The said limit of 10 percent and 24 percent shall be called the individual and aggregate limit, respectively.

Investment by Non-Resident Indians

The total holding by any individual NRI, on a repatriation basis, shall not exceed five percent of the total paid-up equity capital on a fully diluted basis or shall not exceed five percent of the paid-up value of each series of debentures or preference shares or share warrants issued by an Indian company and the total holdings of all NRIs and OCIs put together shall not exceed 10% of the total paid-up equity capital on a fully diluted basis or shall not exceed 10% of the paid-up value of each series of debentures or preference shares or share warrant. Provided that the aggregate ceiling of 10 percent may be raised to 24 percent if a special resolution to that effect is passed by the general body of the Indian company. As on the date of filing this Draft Red Herring Prospectus, no such resolution has been recommended to the shareholders of our Company for adoption.

(The rest of the page is intentionally left blank)

SECTION IX: MAIN PROVISIONS OF THE ARTICLES OF ASSOCIATION

Pursuant to the Companies Act and the SEBI ICDR Regulations, the main provisions of the Articles of Association are detailed below. Capitalized terms used in this section have the meaning given to them in the Articles of Association. Each provision below is numbered as per the corresponding article number in the Articles of Association and defined terms herein have the meaning given to them in the Articles of Association.

Article No.	Particulars
	Constitution of the Company
1	a) The regulations contained in table "F" of schedule I to the Companies Act, 2013 shall apply only in so far as the same are not provided for or are not inconsistent with these Articles. b) The regulations for the management of the Company and for the observance of the Shareholders thereof and their representatives shall be such as are contained in these Articles, subject however to the exercise of the statutory powers of the Company in respect of repeal, additions, alterations, substitution, modifications and variations thereto by Special Resolution as prescribed by the Companies Act, 2013.
	Interpretation
2	Unless the context otherwise requires, words or expressions contained in these Articles shall bear the same meaning as in the Act or any statutory modifications thereof in force at the date at which the Articles become binding on the Company. In these Articles, all capitalized items not defined herein below shall have the meanings assigned to them in the other parts of these Articles when defined for use.
	A. Definitions
	"Act" means the Companies Act, 2013, including any statutory modification or re-enactment or amendment, clarifications and notification thereof for the time being in force and the term shall be deemed to refer to the applicable section thereof which is relatable to the relevant Article in which the said term appears in these Articles and any previous Company law, so far as may be applicable.
	"**Annual General Meeting**" means a general meeting of the members held as such, in accordance with the provisions of the Act.
	"**Articles**" or "**Articles of Association**" mean the articles of association or re-enactment thereof for the time being in force of the Company.
	"**Beneficial Owner**" means a person as defined by section 2(1)(a) of the Depositories Act, 1996.
	"**The Board**" or the "**Board of Directors**" means the collective body of the Directors of the Company.
	"**Capital**" means the share capital, for the time being, raised or authorised to be raised, for purposes of the Company. "**Company**" or "**this Company**" means "SHREE SIDDHIVINAYAK GREENTECH INDUSTRIES LIMITED**"**.
	"**Debenture**" includes debenture stock, bonds or any other instrument of the Company evidencing the debts whether constituting the charge on the assets of the Company or not.
	"**Depositories Act 1996**" means The Depositories Act, 1996 and includes any statutory modification or re-enactment thereof for the time being in force.
	"**Depository**" means and includes a company as defined under section 2(1)(e) of the Depositories Act, 1996.
	"**Directors**" means a director appointed to the Board of the Company.
	"**Dividend**" includes any interim dividend.
	"**Extra-ordinary General Meeting**" means an extraordinary general meeting of the members, duly called and constituted, and any adjourned holding thereof.
	"**In writing**" or "**written**" include printing, lithography and other modes of representing or reproducing words in a visible form.
	"**Member**" means member as defined under section 2(55) of the Companies Act, 2013.
	"**Memorandum of Association**" means the memorandum of association of the Company or re-enactment thereof for the time being in force.
	"**Office**" means the registered office, for the time being, of the Company.
	"**Paid-up Capital**" means paid up capital as defined under section 2(64) of the Act.
	"**Participant**" means individual/institutions as defined under Section 2(1)(g) of the Depositories Act, 1996.

	"**Promoters**" means persons identified in accordance with the definition ascribed to such term in the Companies Act, 2013 and the regulations prescribed by SEBI.
	"**Register of Members**" means the Register of Members to be kept pursuant to the Act, and includes index of beneficial owners mentioned by a Depository.
	"**The Registrar**" means, Registrar as defined under section 2(75) of the Companies Act, 2013.
	"**Secretary**" means a Company Secretary, within the meaning of clause (c) of sub section (1) of section 2 of Company Secretaries Act, 1980, who is appointed by the Company to perform the functions of the Company Secretary under this Act.
	"**Seal**" means the common seal, for the time being, of the Company.
	"**SEBI**" shall mean the Securities and Exchange Board of India, constituted under the Securities and Exchange Board of India Act, 1992.
	"**SEBI Listing Regulations**" shall mean Securities and Exchange Board of India (Listing Obligations and Disclosure Requirements) Regulations, 2015, as amended from time to time.
	"**Share**" means a Share in the capital of the Company, and includes stock, except where a distinction between Stock and Shares is express or implied.
	"**Ordinary Resolution**" and "**Special Resolution**" shall have the same meaning assigned thereto by the Act.
	"**Year**" means a calendar year and "**financial year**" shall have the same meaning as assigned thereto by or under the Companies Act, 2013.
	B. Construction
	In these Articles (unless the context requires otherwise):
	(i) References to a party shall, where the context permits, include such party's respective successors, legal heirs and permitted assigns.
	(ii) The descriptive headings of Articles are inserted solely for convenience of reference and are not intended as complete or accurate descriptions of content thereof and shall not be used to interpret the provisions ofthese Articles and shall not affect the construction of these Articles.
	(iii) References to articles and sub-articles are references to Articles and sub-articles of and to these Articles unless otherwise stated and references to these Articles include references to the articles and sub-articles herein.
	(iv) Words importing the singular include the plural and vice versa, pronouns importing a gender include each of the masculine, feminine and neuter genders, and where a word or phrase is defined, other parts of speech and grammatical forms of that word or phrase shall have the corresponding meanings.
	(v) Wherever the words "include," "includes," or "including" is used in these Articles, such words shall be deemed to be followed by the words "without limitation".
	(vi) The terms "hereof", "herein", "hereto", "hereunder" or similar expressions used in these Articles mean and refer to these Articles and not to any Article of these Articles, unless expressly stated otherwise.
	(vii) Unless otherwise specified, time periods within or following which any payment is to be made or act is to be done shall be calculated by excluding the day on which the period commences and including the day on which the period ends and by extending the period to the next Business Day following if the last day of such period is not a Business Day; and whenever any payment is to be made or action to be taken under these Articles is required to be made or taken on a day other than a Business Day, such payment shall be made or action taken on the next Business Day following.
	(viii) A reference to a party being liable to another party, or to liability, includes, but is not limited to, any liability in equity, contract or tort (including negligence).
	(ix) Reference to statutory provisions shall be construed as meaning and including references also to any amendment or re-enactment for the time being in force and to all statutory instruments or orders made pursuant to such statutory provisions.
	(x) References made to any provision of the Act shall be construed as meaning and including the references to the rules and regulations made in relation to the same by the MCA. The applicable provisions of the Companies Act, 1956 shall cease to have effect from the date on which the corresponding provisions under the Companies Act, 2013 have been notified.
	(xi) In the event any of the provisions of the Articles are contrary to the provisions of the Act and the Rules, the provisions of the Act and Rules will prevail.
	General Authority

3	Where the Act requires that the Company cannot undertake any act or exercise any rights or powers or privilege or authority, unless expressly authorised by its Articles, these Articles shall in relation to the Company, be deemed to confer such right, authority or power or privilege and to carry out such transaction as have been permitted by the Act.
	Capital and Increase and Reduction thereof
4	The Authorised Share Capital of the Company is such amount, as stated, for the time being, or may be varied, from time to time, under the provisions of the Act, in the Clause V of the Memorandum of Association of the Company, divided into such number, classes and descriptions of Shares and into such denominations, as stated therein, and further with such powers to increase the same or otherwise as stated therein.
5	The Company may issue the following kinds of shares in accordance with these Articles, the Act and other applicable laws: (i) Equity Share Capital: with voting rights; and/or with differential rights as to dividend, voting or otherwise; and (ii) Preference Share Capital.
6	The Company, in a general meeting, may, from time to time, increase the capital by the creation of new Shares. Such increase in the capital shall be of such aggregate amount and to be divided into such number of Shares of such respective amounts, as the resolution, so passed in that respect, shall prescribe. Subject to the provisions of the Act, any Shares of the original or increased capital shall be issued upon such terms and conditions and with such rights and privileges annexed thereto as the general meeting, resolving upon the creation thereof, shall direct, and, if no direction be given, as the Directors shall determine, and, in particular, such Shares may be issued with a preferential, restricted or qualified right to dividends, and in the distribution of assets of the Company, on winding up, and with or without a right of voting at general meetings of the Company, in conformity with and only in the manner prescribed by the provisions of the Act. Whenever capital of the Company has been increased under the provisions of this Article, the Directors shall comply with the applicable provisions of the Act.
7	Except so far as otherwise provided by the conditions of issue or by these presents, any capital raised by the creation of new shares shall be considered as part of the existing capital and shall be subject to the provisions contained herein with reference to the payment of calls and instalments, forfeiture, lien, surrender, transfer and transmission, voting or otherwise.
8	Subject to the provisions of Section 55 of the Act and the rules made thereunder, the Company shall have the power to issue preference shares, which are liable to be redeemed and the resolution authorising such issue shall prescribe the manner, terms and conditions of redemption.
9	On the issue of Redeemable Preference Shares under the provisions of the preceding Article, the following provisions shall take effect: (i) No such Shares shall be redeemed except out of the profits of the Company which would otherwise be available for dividend or out of the proceeds of a fresh issue of Shares made for the purpose of the redemption. (ii) No such Shares shall be redeemed unless they are fully paid. The period of redemption in case of preference shares shall not exceed the maximum period for redemption provided under Section 55 of the Act; (iii) The premium, if any, payable on redemption, must have been provided for, out of the profits of the Company or the Share Premium Account of the Company before, the Shares are redeemed; and (iv) Where any such Shares are redeemed otherwise than out of the proceeds of a fresh issue, there shall, out of profits which would otherwise have been available for dividend, be transferred to a reserve fund to be called "Capital Redemption Reserve Account", a sum equal to the nominal amount of the Shares redeemed and the provisions of the Act, relating to the reduction of the Share Capital of the Company, shall, except as provided in Section 80 of the Act, apply as if "Capital Redemption Reserve Account" were paid up Share capital of the Company.
10	Subject to the provisions of the Act, the Company may issue bonus shares to its Members out of (i) its free reserves; (ii) the securities premium account; or (iii) the capital redemption reserve account, in any manner as the Board may deem fit.
11	The Company may issue any debentures, debenture-stock or other securities at a discount, premium or otherwise, if permissible under the Act, and may be issued on the condition that they shall be convertible into shares of any denomination and with any privileges and conditions as to redemption, surrender, drawings, allotment of shares, attending (but not voting) at general

	meetings, appointment of Directors and otherwise. Debentures with the rights to conversion into or allotment of shares shall not be issued except with the sanction of the Company in a general meeting by a special resolution and subject to the provisions of the Act.
12	Subject to the provisions of the Act, the Company shall have the power to make compromise or make arrangements with creditors and members, consolidate, demerge, amalgamate or merge with other company or companies in accordance with the provisions of the Act and any other applicable laws.
13	Subject to Section 66 of the Companies Act, 2013, the Company may by special resolution, reduce its capital and any Capital Redemption Reserve Account or Other Premium Account, for the time being, in any manner, authorised by law, and, in particular, without prejudice to the generality of the foregoing powers, the capital may be paid off on the footing that it may be called up again or otherwise. This Article is not to derogate from any power, the Company would have, if it were omitted.
14	Subject to the applicable provisions of the Act, the Company, in general meeting, may, from time to time, sub-divide, reclassify or consolidate its Shares or any of them, and the resolution whereby any Share is sub-divided, may determine that, as between the holders of the Shares resulting from such sub-division, one or more of such Shares shall have some preference or special advantage as regards dividend, capital or otherwise over or as compared with the other or others. Subject as aforesaid, the Company, in general meeting, may also cancel Shares, which have not been taken or agreed to be taken by any person, and diminish the amount of its Share capital by the amount of the Shares so cancelled.
15	Whenever the capital, by reason of the issue of Preference Shares or otherwise, is divided into different classes of shares, all or any of the rights and privileges attached to each class may, subject to the applicable provisions of the Act, be modified, commuted, affected or abrogated, or dealt with by an agreement between the Company and any person purporting to contract on behalf of that class, provided such agreement is ratified, in writing, by holders of at least three-fourths in nominal value of the issued Shares of the class or is confirmed by a special resolution passed at a separate general meeting of the holders of Shares of that class and all the provisions hereinafter contained as to general meetings, shall, mutatis mutandis, apply to every such meeting.
	Shares and Certificates
16	The Company shall keep or cause to be kept a Register and Index of Members, in accordance with the applicable Sections of the Act. The Company shall be entitled to keep, in any State or Country outside India, a Branch Register of Members, in respect of those residents in that State or Country.
17	The Shares, in the capital, shall be numbered progressively according to their several classes and denominations, and, except in the manner hereinabove mentioned, no Share shall be sub-divided. Every forfeited or surrendered Share may continue to bear the number by which the same was originally distinguished with, or as may be otherwise, as may be decided by the Board of Directors or required by any other authority, as may be, for the time being, in force.
18	Further Issue of Shares (a) Where at any time after the expiry of two years from the formation of the Company or at any time after the expiry of one year from the allotment of Shares in the Company made for the first time after its formation, whichever is earlier, it is proposed to increase the subscribed capital of the Company by allotment of further Shares on rank pari passu basis either out of the unissued or out of the increased Share capital then, such further Shares issued shall be offered to: (a) the persons who at on date specified under the applicable law, are holders of the Equity Shares of the Company, in proportion by sending a letter of offer subject to the conditions set below, as near as circumstances admit, to the capital paid up on those Shares at that date: (i) Such offer shall be made by a notice specifying the number of Shares offered and limiting a time not less than fifteen days and not exceeding thirty days from the date of the offer within which the offer if not accepted, will be deemed to have been declined; (ii) The offer aforesaid shall be deemed to include a right exercisable by the person concerned to renounce the Shares offered to him in favour of any other person and the notice referred to in sub-clause (i) hereof shall contain a statement of this right

	provided that the Directors may decline, without assigning any reason to allot any Shares to any person in whose favour any member may, renounce the Shares offered to him; (iii) After expiry of the time specified in the aforesaid notice or on receipt of earlier intimation from the person to whom such notice is given that he declines to accept the Shares offered, the Board of Directors may dispose of them in such manner as they think most beneficial to the Company; or (b) employees under a scheme of employees' stock option, subject to special resolution passed by the Company and subject to the rules and such other conditions, as may be prescribed under the law (b) Notwithstanding anything contained in sub-clause (i) thereof, the further Shares aforesaid may be offered to any persons, if it is authorised by a special resolution, (whether or not those persons include the persons referred to in clause (a) of sub-clause (i) hereof) in any manner either for cash or for a consideration other than cash, if the price of such shares is determined by the valuation report of a registered valuer subject to the compliance with the applicable provisions of Chapter III and any other conditions as may be prescribed in the Act and the rules made thereunder. (c) The notice referred to in sub-clause (a) of clause (i) hereof shall be dispatched through registered post or speed post or through electronic mode to all the existing shareholders at least 3 (three) days before the opening of the issue. (d) Nothing in sub-clause (c) of (i) hereof shall be deemed: (a) To extend the time within the offer should be accepted; or (b) To authorise any person to exercise the right of renunciation for a second time, on the ground that the person in whose favour the remuneration was first made has declined to take the Shares comprised in the renunciation. (e) Nothing in this Article shall apply to the increase of the subscribed capital of the Company caused by the exercise of an option attached to the Debenture issued or loans raised by the Company to convert such Debenture or loans into Shares in the Company. Provided that the terms of issue of such Debentures or the terms of such loans include a term containing such an option have been approved before the issue of such debentures or the raising of loan by a special resolution passed by the Company in general meeting. (f) The provisions contained in this Article shall be subject to the provisions of the section 42 and section 62 of the Act and other applicable provisions of the Act and rules framed thereunder.
19	Shares at the disposal of the Board Subject to the provisions of Section 62 of the Companies Act, 2013 and the rules made thereunder and these Articles of the Company for the time being, the Shares shall be under the control of the Board who may issue, allot or otherwise dispose of the same or any of them to such persons, in such proportion and on such terms and conditions and either at a premium or at par or discount, subject to Sections 53 and 54 of the Act, and at such time as they may from time to time think fit and with the sanction of the Company in the General Meeting to give any person or persons the option or right to call for any Shares either at par or premium or discount, subject to Sections 53 and 54 of the Act, during such time and for such consideration as the Directors think fit, and may issue and allot Shares in the capital of the Company on payment in full or part of any property sold and transferred or for any services rendered to the Company in the conduct of its business and any Shares which may so be allotted may be issued as fully paid up Shares and if so issued, shall be deemed to be fully paid Shares. Provided that option or right to call of Shares shall not be given to any person or persons without the sanction of the Company in the General Meeting. The Board shall cause to be filed the returns as to allotment as may be prescribed from time to time.
20	In addition to and without derogating from the powers for that purpose conferred on the Board under the preceding two Articles, the Company, in general meeting, may determine that any Shares, whether forming part of the original capital or of any increased capital of the Company,

	shall be offered to such persons, whether or not the members of the Company, in such proportion and on such terms and conditions and, subject to compliance with the provisions of applicable provisions of the Act, either at a premium or at par, as such general meeting shall determine and with full power to give any person, whether a member or not, the option to call for or be allotted Shares of any class of the Company either, subject to compliance with the applicable provision of the Act, at a premium or at par, such option being exercisable at such times and for such consideration as may be directed by such general meeting, or the Company in general meeting may make any other provision whatsoever for the issue, allotment or disposal of any Shares.
21	Any application signed by or on behalf of an applicant for subscription for Shares in the Company, followed by an allotment of any Shares therein, shall be an acceptance of Shares within the meaning of these Articles, and every person, who, thus or otherwise, accepts any Shares and whose name is entered on the Registered shall, for the purpose of these Articles, be a member.
22	The money, if any, which the Board shall, on the allotment of any shares being made by them, require or direct to be paid by way of deposit, call or otherwise, in respect of any Shares allotted by them, shall immediately on the insertion of the name of the allottee in the Register of Members as the name of the holder of such Shares, become a debt due to and recoverable by the Company from the allottee thereof, and shall be paid by him accordingly, in the manner prescribed by the Board.
23	Every member or his heirs, executors or administrators, shall pay to the Company the portion of the capital represented by his Share or Shares which may, for the time being, remain unpaid thereon, in such amounts, at such time or times, and in such manner as the Board shall, from time to time, in accordance with the Regulations of the Company, require or fix for the payment thereof.
24	(i) Every Member shall be entitled, without payment, to one or more certificates in marketable lots, for all the Shares of each class or denomination registered in his name, or if the Directors so approve (upon paying such fee as the Directors may from time to time determine) to several certificates, each for one or more of such Shares and the Company shall complete and have ready for delivery such certificates within the time specified by the law applicable at the time. Every certificate of shares shall be in the form and manner specified in the Articles and in respect of a share or shares held jointly by several persons, the Company shall not be bound to issue more than one certificate and delivery of a certificate of shares to the first named joint holders shall be sufficient delivery to all such holders. (ii) Particulars of every Share certificate issued shall be entered in the Register of Members against the name of the person, to whom it has been issued, indicating the date of issue. (iii) Any two or more joint allotees, in respect of a Share, shall, for the purpose of this Article, be treated as a single member, and the certificate of any Share, which may be subject of joint ownership, may be delivered to the person named first in the order or otherwise even to any one of such joint owners, on behalf of all of them. For any further certificate, the Board shall be entitled but shall not be bound to prescribe a charge not exceeding Rupee 50(fifty) per such certificate. In this respect, the Company shall comply with the applicable provisions, for the time being, in force, of the Act. (iv) A director may sign a Share certificate by affixing his signature thereon by means of any machine, equipment or other mechanical means, such as engraving in metal or lithography, but not by means of a rubber stamp provided that the Directors shall be responsible for the safe custody of such machine, equipment or other material used for the purpose.
25	(i) The Directors may, if they think fit, subject to the provisions of Section 50 of the Act, agree to receive from any member willing to advance the same, all or any part of the amount of his Shares beyond the sums actually called up and upon the monies so paid in advance or upon so much thereof as from time to time exceeds the amount of the calls then made upon the Shares in respect of which such advances has been made, the Company may pay interest at such rate, as the member paying such sum in advance and the Directors agree upon provided that money paid in advance of calls shall on any Share may carry interest but shall not confer a right to participate in profits or dividend. The Directors may at any time repay the amount so advanced.

	The member shall not be entitled to any voting rights in respect of the moneys so paid by him until the same would but for such payment, become presently payable. The Provisions of these Articles shall mutatis mutandis apply to the calls on Debentures of the Company. (ii) When a new Share certificate has been issued in pursuance of the preceding clause of this Article, it shall state on the face of it and against the stub or counterfoil to the effect that it is "Issued in lieu of Share Certificate No. __ sub-divided/replaced/on consolidation of Shares". (iii) If any certificate be worn out, defaced, mutilated, or torn or if there be no further space on the back thereof for endorsement of transfer, then upon production and surrender thereof to the Company, a new certificate may be issued in lieu thereof and if any certificate lost or destroyed then upon proof thereof to the satisfaction of the Company and on execution of such indemnity as the Company deem adequate, being given, and a new certificate in lieu thereof shall be given to the party entitled to such lost or destroyed certificate. Every certificate under the Article shall be issued without payment of fees if the Directors so decide, or on payment of such fees in accordance with law applicable at the time and as the Directors shall prescribe. Provided that no fee shall be charged for issue of new certificates in replacement of those which are old, defaced or worn out or where there is no further space on the back thereof for endorsement of transfer. Provided that notwithstanding what is stated above the Directors shall comply with such Rules or Regulation or requirements of any Stock Exchange or the Rules made under the Act or the rules made under Securities Contracts (Regulation) Act, 1956 or any other Act, or rules applicable in this behalf. The provision of this Article shall mutatis mutandis apply to debentures of the Company. When a new Share certificate has been issued in pursuance of the preceding clause of this Article, it shall state on the face of it and against the stub or counterfoil to the effect that it is "DUPLICATE. Issued in lieu of Share Certificate No. ___" The word "DUPLICATE" shall be stamped or punched in bold letters across the face of the Share certificate. (iv) Where a new Share certificate has been issued in pursuance of clause (i) or clause (iii) of this Article, particulars of every such Share certificate shall be entered in a Register of Renewed and Duplicate Share Certificates, indicating against the names of the person or persons to whom the certificate is issued, the number and date of issue of the Share certificate, in lieu of which the new certificate is issued, and the necessary changes indicated in the Register of Members by suitable cross reference in the "Remarks" column. (v) All blank forms to be issued for issue of Share certificates shall be printed and the printing shall be done only on the authority of a resolution of the Board. The blank forms shall be consecutively numbered, whether by machine, hand or otherwise, and the forms and the blocks, engravings, facsimiles and hues relating to the printing of such forms shall be kept in the custody of the Secretary, where there is no Secretary, the Managing Director or Whole time Director, and where there is no such director, the Chairman of the Board, for the time being, or otherwise of such other person, as the Board may appoint for the purpose, and the Secretary, such director, Chairman or such other person shall be responsible for rendering an account of these forms to the Board. (vi) The Managing Director of the Company, for the time being, or, if the Company has no Managing Director, every director of the Company shall be severally responsible for the maintenance, preservation and safe custody of all books and documents relating to the issue of Share certificates except the blank forms of Share certificates referred to in Clause (vi) of this Article. (vii) All books referred to in clause (vii) of this Article shall be preserved in good order permanently, or for such period as may be prescribed by the Act or the Rules made thereunder.
26	If any Share stands in the names of two or more persons, the person first named, in the Register, shall, as regards receipt of dividends or bonus or service of notices and all or any matter connected with the Company, except voting at meetings and the transfer of the Shares, be

	deemed the sole holder thereof but the joint holders of a Share shall be severally as well as jointly liable for the payment of all instalments of calls due in respect of such Share and for all incidents otherwise.
27	Except as ordered by a Court of competent jurisdiction or as by law required, the Company shall not be bound to recognise any equitable, contingent, future or partial interest in any Share, or, except only as is, by these presents, otherwise expressly provided, any right in respect of a Share other than an absolute right thereto, in accordance with these Articles, in the person, from time to time, registered as the holder thereof, but the Board shall be, at liberty, at their sole discretion, to register any Share in the joint names of any two or more persons or the survivor or survivors of them.
28	Subject to the provisions of Sections 68 to 70 of the Act 2013 and the rules thereunder, the Company may purchase its own Shares or other specified securities out of free reserves, the securities premium account or the proceeds of issue of any Share or specified securities.
29	Subject to the provisions contained in sections 68 to 70 and all applicable provisions of the Act and subject to such approvals, permissions, consents and sanctions from the concerned authorities and departments, including the SEBI, Registrar and the Reserve Bank of India, if any, the Company may, by passing a special resolution at a general meeting, purchase its own Shares or other specified securities (hereinafter referred to as '**buy-back**') from its existing Shareholders on a proportionate basis and/or from the open market and/or from the lots smaller than market lots of the securities (odd lots), and/or the securities issued to the employees of the Company pursuant to a scheme of stock options or sweat Equity, from out of its free reserves or out of the securities premium account of the Company or out of the proceeds of any issue made by the Company specifically for the purpose, on such terms, conditions and in such manner as may be prescribed by law from time to time; provided that the aggregate of the securities so bought back shall not exceed such number as may be prescribed under the Act or Rules made from time to time.
	Commission and Brokerage
30	Subject to the provisions of Section 40 of the Act 2013 and the rules thereof, the Company may, at any time, pay a commission to any person in consideration of his subscribing or agreeing to subscribe, whether absolutely or conditionally, for any Shares in or Debentures of the Company or procuring or agreeing to procure the subscribers, whether absolutely or conditional, for any Shares in or Debentures of the Company, but so that the rate or amount of the commission shall not exceed the rate or amount prescribed in rules made under sub-section (6) of Section 40 of the Act, and such commission may be satisfied in any such manner, including the allotment of the fully or partly paid up Shares or Debentures, as the case may be, as the Board thinks fit and proper.
31	Subject to the provisions of the Act, the Company may pay a reasonable sum for brokerage.
	Calls
32	The Board may, from time to time, subject to the terms on which any Shares may have been issued and subject to the conditions of allotment, by a resolution passed only at a duly constituted meeting of the Board, make such call, as it thinks fit, upon the members in respect of all moneys unpaid on the Shares held by them respectively and each member shall pay the amount of every call so made on him to the person or persons and at the times and places appointed by the Board. A call may be made payable by instalments.
33	Provided that no call shall exceed one-fourth of the nominal value of the share or be payable at less than one month from the date fixed for the payment of the last preceding call.
34	At least fourteen days' notice, in writing, of any call, shall be given by the Company specifying the time and place of payment, and the person or persons to whom such call be paid.
35	A call shall be deemed to have been made at the time when the resolution authorizing such call was passed at a meeting of the Board.
36	The Board may, from time to time, at its discretion, extend the time fixed for the payment of any call, and may extend such time as to all or any of the members whom owing to their residence at a distance or other cause, the Board may deem fairly entitled to such extension, but no member shall be entitled to such extension, save as a matter of grace and favour.
37	A call may be revoked or postponed at the discretion of Board.
38	All calls shall be made on a uniform basis on all shares falling under the same class.
39	The joint holders of a Share shall be jointly and severally liable to pay all calls in respect thereof.
40	If any members fails to pay any call due from him on the day appointed for payment thereof, or any such extension thereof as aforesaid, he shall be liable to pay interest on the same from the

	day appointed for the payment thereof to the time of actual payment at such rate as shall, from time to time, be fixed by the Board, but nothing in this Article shall render it obligatory for the Board to demand or recover any interest from any such member, the Board shall be at liberty to waive payment of any such interest wholly or in part.
41	Any sum, which, by the terms of issue of a Share, becomes payable on allotment or at any fixed date, whether on account of the nominal value of the Share or by way of premium, shall, for the purposes of these Articles, be deemed to be a call duly made and payable on the date on which, by the terms of issue, the same becomes payable, and, in the case of non-payment, all the relevant provisions of these Articles as to payment of interest and expenses, forfeiture or otherwise, shall apply, as if such sum had become payable by virtue of a call duly made and notified.
42	On the trial or hearing of any action or suit brought by the Company against any member or his representative for the recovery of any money claimed to be due to the Company in respect of his Shares, it shall be sufficient to prove that the name of the member, in respect of whose Shares the money is sought to be recovered, appears or is entered on the Register of Members as the holder, at or subsequent to the date at which the money is sought to be recovered, is alleged to have become due on the Shares in respect of which money is sought to be recovered, and that the resolution making the call is duly recorded in the minute book, and that notice, of which call, was duly given to the member or his representatives and used in pursuance of these Articles, and it shall not be necessary to prove the appointment of the Directors who made such call, and not that a quorum of Directors was present at the meeting of the Board at which any call was made, and nor that the meeting, at which any call was made, has duly been convened or constituted nor any other matter whatsoever, but the proof of the matters aforesaid shall be conclusive of the debt.
43	Neither the receipt by the Company of a portion of any money which shall, from time to time, be due from any member to the Company in respect of his Shares, either by way of principal or interest, nor any indulgence granted by the Company in respect of the payment of any such money, shall preclude the Company from thereafter proceeding to enforce a forfeiture of such Shares as hereinafter provided.
44	(i) The Board may, if it thinks fit, agree to and receive from any member willing to advance the same all or any part of the amounts of his respective Shares beyond the sums actually called up and upon the moneys so paid in advance, or upon so much thereof, from time to time, and, at any time thereafter, as exceeds the amount of the calls then made upon and due in respect of the Shares on account of which such advances are made, the Board may pay or allow interest at such rate, as the member paying the sum in advance and the Board agrees upon, subject to the provisions of the Act. The Board may agree to repay, at any time, any amount so advanced or may, at any time, repay the same upon giving to the member 3 (Three) months' notice, in writing, provided that moneys paid, in advance of calls, on any Shares may carry interest but shall not confer a right to dividend or to participate in profits. (ii) No member paying any such sum in advance shall be entitled to voting rights in respect of the moneys so paid by him, until the same would, but for such payment, become presently payable. The provisions of this Article shall *mutatis mutandis* apply to any calls on debentures of the Company.
	Lien
45	(i) The Company shall have a first and paramount lien upon all the Shares/Debentures (other than fully paid-up Shares/Debentures) registered in the name of each member (whether solely or jointly with others) and upon the proceeds of sale thereof for all moneys (whether presently payable or not) called or payable at a fixed time in respect of such Shares/Debentures and no equitable interest in any Shares shall be created except upon the footing and condition that this Article will have full effect. And such lien shall extend to all dividends and bonuses from time to time declared in all respect of such Shares/Debentures. Unless otherwise agreed, the registration of a transfer of Shares/Debentures shall operate as a waiver of the Company's lien, if any, on such Shares/Debentures. The Directors may at any time declare any Shares/Debentures wholly or in part to be exempt from the provisions of this clause.

	(ii) Every fully paid shares shall be free from all lien and that in the case of partly paid shares the Issuer's lien shall be restricted to moneys called or payable at a fixed time in respect of such shares.
46	For the purpose of enforcing such lien, the Board may sell the Shares, subject thereto, in such manner, as it shall think fit, and, for that purpose, may cause to be issued a duplicate certificate in respect of such Shares, and may authorise one of their members to execute a transfer thereof, on behalf of and in the name of such manner. The Company may sell, in such manner as the Board thinks fit, any shares on which the Company has a lien, provided that no sale shall be made (a) unless a sum in respect of which the lien exists is presently payable; or (b) until the expiration of fourteen days after a notice in writing stating and demanding payment of such part of the amount in respect of which the lien exists as is presently payable, has been given to the registered holder for the time being of the share or the person entitled thereto by reason of his death or insolvency.
47	The net proceeds of any such sale shall be received by the Company and applied in or towards payment of such part of the amount, in respect of which the lien exists, as is presently payable, and the residue, if any, shall, subject to a like lien for sums not presently payable as existed upon the Shares before the sale, be paid to the persons entitled to the Shares at the date of the sale.
48	A member shall exercise any voting rights in respect of the shares in regard to which the Company has exercised the right of Lien.
	Forfeiture of Shares
49	If any member fails to pay any call or instalment of a call on or before the day appointed for the payment of the same or any such extension thereof as aforesaid, the Board may, at any time thereafter, during such time as the call or instalment remains unpaid, give notice to him requiring him to pay the same together with any interest that may have accrued and all expenses that may have been incurred by the Company by reason of such non-payment.
50	The notice shall name a day, not being less than 14 (Fourteen) days from the date of the notice, and a place or places on and at which such call or instalment and such interest and expenses as aforesaid are to be paid. The notice shall also state, that, in the event of the non-payment at or before the time and at the place appointed, the Shares, in respect of which the call was made or instalment is payable, will be liable to be forfeited.
51	If the requirements of any such notice, as aforesaid, shall not be complied with, every or any Share, in respect of which such notice has been given, may, at any time thereafter, before payment of all calls or instalments, interest and expenses, as may be due in respect thereof, be forfeited by a resolution of the Board to that effect. Subject to the provisions of the Act, such forfeiture shall include all dividends declared or any other moneys payable in respect of the forfeited Shares and not actually paid before the forfeiture.
52	When any Share shall have been so forfeited, notice of the forfeiture shall be given to the member, in whose name it stood immediately prior to the forfeiture and an entry of the forfeiture with the date thereof, shall, forthwith, be made in the Register of Members. But no forfeiture shall be, in any manner, invalidated by any omission or neglect to give such notice or to make any such entry as aforesaid.
53	Any Share, so forfeited, shall be deemed to be the property of the Company, and may be sold, re-allotted or otherwise disposed of, either to the original holder thereof or to any other person, upon such terms and in such manner as the Board shall think fit.
54	Any member, whose Shares have been forfeited, shall, notwithstanding the forfeiture, be liable to pay and shall forthwith pay to the Company, on demand, all calls, instalments, interest and expenses owing upon or in respect of such Shares at the time of the forfeiture together with interest thereof, until payment, at such rate, as the Board may determine, and the Board may enforce the payment thereof, if it thinks fit.
55	The forfeiture of a Share shall involve extinction, at the time of the forfeiture, of all interests in and all claims and demands against the Company, in respect of such Share and all other rights, incidental to the Share, except only such of those rights as by these presents are expressly saved.
56	A declaration, in writing, that the declarant is a director or Secretary of the Company and that a Share in the Company has duly been forfeited in accordance with these Articles, on a date stated in the declaration, shall be conclusive evidence of the facts therein stated as against all persons claiming to be entitled to the Shares.
57	Upon any sale after forfeiture or for enforcing a lien in purported exercise of the powers hereinbefore given, the Board may appoint some person to execute an instrument of transfer of the Shares sold, and cause the purchaser's name to be entered in the Register, in respect of the

	Shares sold, and the purchaser shall not be bound to see to the regularity of the proceedings or to the application of the purchase money, and, after his name has been entered in the Register, in respect of such Shares, the validity of the sale shall not be impeached by any person, and the remedy of any person aggrieved by the sale shall be in damages only and exclusively against the Company and no one else.
58	Upon any sale, re-allotment or other disposal under the provisions of the preceding Article, the certificate or certificates originally issued, in respect of the relative Shares, shall, unless the same shall, on demand by the Company, have been previously surrendered to it by the defaulting member, stand cancelled and become null and void and of no effect, and the Directors shall be entitled to issue a duplicate certificate or certificates, in respect of the said Shares, to the person or persons entitled thereto.
	Transfer and Transmission of Shares
59	The Company shall keep the "Register of Transfers" and therein shall fairly and distinctly enter particulars of every transfer or transmission of any Share.
60	No transfer shall be registered unless a proper instrument of transfer has been delivered to the Company. A common form of transfer shall be used. Every instrument of transfer shall be in writing and all provisions of the Act, the rules and applicable laws shall be duly complied with. The instrument shall also be duly stamped, under the relevant provisions of the Law, for the time being, in force, and shall be signed by or on behalf of the transferor and the transferee, and in the case of a Share held by two or more holders or to be transferred to the joint names of two or more transferees by all such joint holders or by all such joint transferees, as the case may be, and the transferor or the transferors, as the case may be, shall be deemed to remain the holder or holders of such Share, until the name or names of the transferee or the transferees, as the case may be, is or are entered in the Register of Members in respect thereof. Several executors or administrators of a deceased member, proposing to transfer the Share registered in the name of such deceased member, or the nominee or nominees earlier appointed by the said deceased holder of Shares, in pursuance of the Article 88, shall also sign the instrument of transfer in respect of the Share, as if they were the joint holders of the Share.
61	Shares in the Company may be transferred by an instrument, in writing, in the form, as shall, from time to time, be approved by the Directors provided that, if so required by the provisions of the Act, such instrument of Transfer shall be in the form prescribed thereunder and shall be duly stamped and delivered to the Company within the prescribed period. All the provisions of Section 56 of the Act, 2013 shall be duly complied with in respect of all transfers of Shares and registration thereof.
62	The Board shall have power, on giving 7 (Seven) days' previous notice, by advertisement in some newspaper circulating in the district in which the Registered Office of the Company is, for the time being, situated, to close the transfer books, the Register of Members of Register of Debenture holders, at such time or times and for such periods, not exceeding thirty days at a time and not exceeding in the aggregate forty-five days in each year, as it may seem expedient.
63	Subject to the provisions of Section 58 and 59 of the Companies Act 2013, these Articles and any other applicable provisions of the Act or any other law for the time being in force, the Board may, refuse, whether in pursuance of any power of the Company under these Articles or otherwise, to register the transfer of, or the transmission by operation of law of the right to, any Shares or interest of a member in, or Debentures of the Company. The Company shall within the time required under the law applicable at that time send to the transferee and transferor or to the person giving intimation of such transmission, as the case may be, notice of the refusal to register such transfer, giving reasons for such refusal provided that registration of transfer shall not be refused on the ground of the transferor being either alone or jointly with any other person or persons indebted to the Company on any account whatsoever except when the Company has a lien on the Shares.
64	An application for the registration of a transfer of Shares in/ the Company may be made either by the transferor or the transferee. Where such application is made by a transferor and relates to partly paid Shares, the Company shall give notice of the application to the transferee. The transferee may, within two weeks from the date of the receipt of the notice and not later, object to the proposed transfer. The notice to the transferee shall be deemed to have been duly given, if dispatched by prepaid registered post to the transferee at the address given in the instrument of transfer and shall be deemed to have been delivered at the time when it would have been delivered in the ordinary course of post.
65	In the case of the death of any one or more of the persons named in the Register of Members as the joint holders of any Share, the survivor or survivors shall be the only persons recognised by

	the Company as having any title to or interest in such Share, but nothing herein contained shall be taken to release the estate of a deceased joint holder from any liability on Shares held by him jointly with any other person.
66	Subject to the provisions of Article 87 hereunder, the executors or administrators or holders of a such Succession Certificate or the legal representative of a deceased member, not being one of two or more joint holders, shall be the only persons recognised by the Company as having any title to the Shares registered in the name of such member, and the Company shall not be bound to recognise such executors or administrators or holders of a Succession Certificate or the legal representatives, unless such executors or administrators or legal representatives shall have first obtained Probate or Letters of Administration or Succession Certificate, as the case may be, from a duly constituted Court in the Union of India, provided that, in cases, the Board may dispense with production of probate or letters of Administration or Succession Certificate upon such terms as to indemnify or otherwise, as the Board, in its absolute discretion, may think necessary, in the circumstances thereof, and, in pursuance of the Article 61 herein under, register the name of any person, who claims to be absolutely entitled to the Shares standing in the name of a deceased member, as a member.
67	No Share shall, in any circumstances, be transferred to any infant, insolvent or person of unsound mind, and that no Share, partly paid up, be issued, allotted or transferred to any minor, whether alone or along with other transferees or allottees, as the case may be.
68	So long as the director having unlimited liability has not discharged all liabilities, whether present or future, in respect of the period for which he is and continues to be, so long, liable, he shall not be entitled to transfer the Shares held by him or cease to be a member of the Stock Exchange(s) to the end and intent that he shall continue to hold such minimum number of Shares as were held by him prior to his becoming a director with unlimited liability.
69	Subject to the provisions of Articles 64, 65 and 87 hereof, any person becoming entitled to Shares in consequences of the death, lunacy, bankruptcy or insolvency or any member, or the marriage of any female member or by any lawful means other than by a transfer in accordance with these presents, may, with the consent of the Board, which it shall not be under any obligation to give, upon producing such evidence that he sustains the character in respect of which he proposes to act under the Article or of his title, as the Board thinks sufficient, either be registered himself as the holder of the Share or elect to have some person, nominated by him and approved by the Board, registered as such person, provided, nevertheless, that if such person shall elect to have his nominee registered, he shall testify the election by executing in favour of his nominee an instrument of transfer in accordance with the provisions herein to in these Articles as "The Transmission Article".
70	Subject to the provisions of the Act, a person entitled to a Share by transmission shall, subject to the right of the Directors to retain such dividend or money as hereinafter provided, be entitled to receive and may be given a discharge for, any dividends or other moneys payable in respect of the Share.
71	No fees shall be charged for registration of transfer, transmission, probate, succession certificate and letters of administration, certificate of death or marriage, power of attorney or similar document.
72	The Company shall incur no liability or responsibility whatever in consequence of its registering or giving effect to any transfer of Shares made or purporting to be made by any apparent legal owner thereof, as shown or appearing in the Register of Members, to the prejudice of persons having or claiming any equitable right, title or interest to or in the said Shares, notwithstanding that the Company may have had notice of such equitable right, title or interest or notice prohibiting of such transfer, and may have entered such notice, referred thereto, in any book of the Company, and the Company shall not be bound or required to regard or attend or give effect any notice which may be given to it of any equitable right, title or interest, or be under any liability whatsoever refusing or neglecting so to do, though it may have been entered or referred to in some book of the Company, but the Company shall nevertheless be at liberty to regard and attend to any such notice, and give effect thereto if the Board shall so think fit.
	Dematerialisation of Securities
73	Notwithstanding anything contained in the Articles, the Company shall be entitled to dematerialise its shares, debentures and other securities and offer such shares, debentures and other securities in a dematerialised form pursuant to the Depositories Act 1996.
74	Notwithstanding anything contained in the Articles, and subject to the provisions of the law for the time being in force, the Company shall on a request made by a beneficial owner, re-materialise the shares, which are in dematerialised form.

75	Every Person subscribing to the shares offered by the Company shall have the option to receive share certificates or to hold the shares with a Depository. Where Person opts to hold any share with the Depository, the Company shall intimate such Depository of details of allotment of the shares to enable the Depository to enter in its records the name of such Person as the beneficial owner of such shares. Such a Person who is the beneficial owner of the shares can at any time opt out of a Depository, if permitted by the law, in respect of any shares in the manner provided by the Depositories Act 1996 and the Company shall in the manner and within the time prescribed, issue to the beneficial owner the required certificate of shares. In the case of transfer of shares or other marketable securities where the Company has not issued any certificates and where such shares or securities are being held in an electronic and fungible form, the provisions of the Depositories Act 1996 shall apply.
76	If a Person opts to hold his shares with a Depository, the Company shall intimate such Depository the details of allotment of the shares, and on receipt of the information, the Depository shall enter in its record the name of the allottee as the beneficial owner of the shares.
77	All shares held by a Depository shall be dematerialised and shall be in a fungible form. (a) Notwithstanding anything to the contrary contained in the Act or the Articles, a Depository shall be deemed to be the registered owner for the purposes of effecting any transfer of ownership of shares on behalf of the beneficial owner. (b) Save as otherwise provided in (a) above, the Depository as the registered owner of the shares shall not have any voting rights or any other rights in respect of shares held by it.
78	Every person holding shares of the Company and whose name is entered as the beneficial owner in the records of the Depository shall be deemed to be the owner of such shares and shall also be deemed to be a shareholder of the Company. The beneficial owner of the shares shall be entitled to all the liabilities in respect of his shares which are held by a Depository. The Company shall be further entitled to maintain a register of members with the details of members holding shares both in material and dematerialised form in any medium as permitted by law including any form of electronic medium.
79	Notwithstanding anything in the Act or the Articles to the contrary, where shares are held in a Depository, the records of the beneficial ownership may be served by such Depository on the Company by means of electronic mode or by delivery of disks, drives or any other mode as prescribed by law from time to time.
80	Nothing contained in the Act or the Articles regarding the necessity to have distinctive numbers for securities issued by the Company shall apply to securities held with a Depository.
	Conversion of Shares into Stock and Reconversion
81	The Company, by resolution in general meeting, may convert any paid-up Shares into stock, or may, at any time, reconvert any stock into paid up Shares of any denomination. When any Shares shall have been converted into stock, the several holders of such stock may thenceforth transfer their respective interests therein, or any part of such interest, in the same manner and, subject to the same regulations as to which Shares in the Company may be transferred or as near thereto as circumstances will admit. But the Directors may, from time to time, if they think fit, fix the minimum amount of stock transferable, and restrict or forbid the transfer of fractions of that minimum, but with full power nevertheless, at their discretion, to waive such rules in any particular case. The notice of such conversion of Shares into stock or reconversion of stock into Shares shall be filed with the Registrar of Companies as provided in the Act.
82	The Stock shall confer on the holders thereof respectively the same privileges and advantages, as regards participation in profits and voting at meetings of the Company and, for other purposes, as would have been conferred by Shares of equal amount in the capital of the Company of the same class as the Shares from which such stock was converted but no such privilege or advantage, except the participation in profits of the Company, or in the assets of the Company on a winding up, shall be conferred by any such aliquot part or, consolidated stock as would not, if existing in Shares, have conferred such privileges or advantages. No such conversion shall affect or prejudice any preference or other special privilege attached to the Shares so converted. Save as aforesaid, all the provisions herein contained shall, so far as circumstances will admit, apply to stock as well as to Shares and the words "Share" and "Shareholder" in these presents shall include "stock" and "stock-holder".
83	The Company may issue Share warrants in the manner provided by the said Act and accordingly the Directors may, in their discretion, with respect to any fully paid up Share or stock, on application, in writing, signed by the person or all persons registered as holder or holders of the Share or stock, and authenticated by such evidence, if any, as the Directors may, from time to time, require as to the identity of the person or persons signing the application,

	and on receiving the certificate, if any, of the Share or stock and the amount of the stamp duty on the warrant and such fee as the Directors may, from time to time, prescribe, issue, under the Seal of the Company, a warrant, duly stamped, stating that the bearer of the warrant is entitled to the Shares or stock therein specified, and may provide by coupons or otherwise for the payment of future dividends, or other moneys, on the Shares or stock included in the warrant. On the issue of a Share warrant the names of the persons then entered in the Register of Members as the holder of the Shares or stock specified in the warrant shall be struck off the Register of Members and the following particulars shall be entered therein. (i) fact of the issue of the warrant. (ii) a statement of the Shares or stock included in the warrant distinguishing each Share by its number, and (iii) the date of the issue of the warrant.
84	A Share warrant shall entitle the bearer to the Shares or stock included in it, and, notwithstanding anything contained in these articles, the Shares or stock shall be transferred by the delivery of the Share-warrant, and the provisions of the regulations of the Company with respect to transfer and transmission of Shares shall not apply thereto.
85	The bearer of a Share-warrant shall, on surrender of the warrant to the Company for cancellation, and on payment of such fees, as the Directors may, from time to time, prescribe, be entitled, subject to the discretion of the Directors, to have his name entered as a member in the Register of Members in respect of the Shares or stock included in the warrant.
86	The bearer of a Share-warrant shall not be considered to be a member of the Company and accordingly save as herein otherwise expressly provided, no person shall, as the bearer of Share-warrant, sign a requisition for calling a meeting of the Company, or attend or vote or exercise any other privileges of a member at a meeting of the Company, or be entitled to receive any notice from the Company of meetings or otherwise, or qualified in respect of the Shares or stock specified in the warrant for being a director of the Company, or have or exercise any other rights of a member of the Company.
87	The Directors may, from time to time, make rules as to the terms on which, if they shall think fit, a new Share warrant or coupon may be issued by way of renewal in case of defacement, loss, or destruction.
	Nomination by Security Holder
88	(i) Every holder of Securities in the Company may, at any time, nominate, in the prescribed manner, a person to whom his Securities in the Company, shall vest in the event of his death. (ii) Where the Securities in the Company are held by more than one person jointly, the joint-holders may together nominate, in the prescribed manner, a person to whom all the rights in the Securities in the Company shall vest in the event of death of all joint holders. (iii) Notwithstanding anything contained in these Articles or any other law, for the time being, in force, or in any disposition, whether testamentary or otherwise, in respect of such Securities in the Company, where a nomination made in the prescribed manner purports to confer on any person the right to vest the Securities in the Company, the nominee shall, on the death of the Shareholders of the Company or, as the case may be, on the death of the joint holders, become entitled to all the rights in the Securities of the Company or, as the case may be, all the joint holders, in relation to such securities in the Company, to the exclusion of all other persons, unless the nomination is varied or cancelled in the prescribed manner. (iv) In the case of fully paid up Securities in the Company, where the nominee is a minor, it shall be lawful for the holder of the Securities, to make the nomination to appoint in the prescribed manner any person, being a guardian, to become entitled to Securities in the Company, in the event of his death, during the minority.
89	(i) Any person who becomes a nominee by virtue of the provisions of the preceding Article, upon the production of such evidence as may be required by the Board and subject as hereinafter provided, elect, either – (a) to be registered himself as holder of the Share(s); or (b) to make such transfer of the Share(s) as the deceased Shareholder could have made.

	(ii) If the person being a nominee, so becoming entitled, elects to be registered as holder of the Share(s), himself, he shall deliver or send to the Company a notice in writing signed by him stating that he so elects, and such notice shall be accompanied with the death certificate of the deceased shareholder. (iii) All the limitations, restrictions and provisions of the Act relating to the right to transfer and the registration of transfers of Securities shall be applicable to any such notice or transfer as aforesaid as if the death of the member had not occurred and the notice or transfer has been signed by that Shareholder. (iv) A person, being a nominee, becoming entitled to a Share by reason of the death of the holder, shall be entitled to the same dividends and other advantages which he would be entitled if he were the registered holder of the Share except that he shall not, before being registered a member in respect of his Share be entitled in respect of it to exercise any right conferred by membership in relation to meetings of the Company: Provided that the Board may, at any time, give notice requiring any such person to elect either to be registered himself or to transfer the Share(s) and if the notice is not complied with within ninety days, the Board may thereafter withhold payment of all dividends, bonuses or other moneys payable in respect of the Share(s) or until the requirements of the notice have been complied with.
	Meeting of Members
90	(i) The Company shall, in each year, hold a general meeting as its Annual General Meeting. Any meeting, other than Annual General Meeting, shall be called Extra-ordinary General Meeting. (ii) Not more than 15 (Fifteen) months or such other period, as may be prescribed, from time to time, under the Act, shall lapse between the date of one Annual General Meeting and that of the next. Nothing contained in the foregoing provisions shall be taken as affecting the right conferred upon the Registrar under the provisions of the Act to extend time within which any Annual General Meeting may be held. (iii) Every Annual General Meeting shall be called for a time during business hours i.e., between 9 a.m. and 6 p.m., on a day that is not a National Holiday, and shall be held at the Office of the Company or at some other place within the city, in which the Office of the Company is situated, as the Board may think fit and determine and the notices calling the Meeting shall specify it as the Annual General Meeting. (iv) Every member of the Company shall be entitled to attend, either in person or by proxy, and by way of a postal ballot whenever and in the manner as may permitted or prescribed under the provisions of the Act, and the Auditors to the Company, who shall have a right to attend and to be heard, at any general meeting which he attends, on any part of the business, which concerns him as the Auditors to the Company, further, the Directors, for the time being, of the Company shall have a right to attend and to be heard, at any general meeting, on any part of the business, which concerns them as the Directors of the Company or generally the management of the Company. At every Annual General Meeting of the Company, there shall be laid, on the table, the Directors' Report and Audited Statements of Account, Auditors' Report, the proxy Register with forms of proxies, as received by the Company, and the Register of Directors' Share holdings, which Register shall remain open and accessible during the continuance of the meeting, and therefore in terms of the provisions of Section 96 of the Act, the Annual General Meeting shall be held within six months after the expiry of such financial year. The Board of Directors shall prepare the Annual List of Members, Summary of the Share Capital, Balance Sheet and Profit and Loss Account and forward the same to the Registrar in accordance with the applicable provisions of the Act.
91	The Board may, whenever it thinks fit, call an Extra-ordinary General Meeting and it shall do so upon a requisition, in writing, by any member or members holding, in aggregate not less than one-tenth or such other proportion or value, as may be prescribed, from time to time, under the

	Act, of such of the paid-up capital as at that date carries the right of voting in regard to the matter, in respect of which the requisition has been made.
92	Any valid requisition so made by the members must state the object or objects of the meeting proposed to be called, and must be signed by the requisitionists and be deposited at the office, provided that such requisition may consist of several documents, in like form, each of which has been signed by one or more requisitionists.
93	Upon receipt of any such requisition, the Board shall forthwith call an Extra-ordinary General Meeting and if they do not proceed within 21 (Twenty-one) days or such other lessor period, as may be prescribed, from time to time, under the Act, from the date of the requisition, being deposited at the office, to cause a meeting to be called on a day not later than 45 (Forty-five) days or such other lessor period, as may be prescribed, from time to time, under the Act, from the date of deposit of the requisition, the requisitionists, or such of their number as represent either a majority in value of the paid up Share capital held by all of them or not less than one-tenth of such of the paid up Share Capital of the Company as is referred to in Section 100(4) of the Act, whichever is less, may themselves call the meeting, but, in either case, any meeting so called shall be held within 3 (Three) months or such other period, as may be prescribed, from time to time, under the Act, from the date of the delivery of the requisition as aforesaid.
94	Any meeting called under the foregoing Articles by the requisitionists shall be called in the same manner, as nearly as possible as that in which such meetings are to be called by the Board.
95	At least 21 (Twenty-one) days' notice, of every general meeting, Annual or Extra-ordinary, and by whomsoever called, specifying the day, date, place and hour of meeting, and the general nature of the business to be transacted there at, shall be given in the manner hereinafter provided, to such persons as are under these Articles entitled to receive notice from the Company, provided that in the case of an General Meeting, with the consent of members holding not less than 95 per cent of such part of the paid up Share Capital of the Company as gives a right to vote at the meeting, a meeting may be convened by a shorter notice. In the case of an Annual General Meeting of the Shareholders of the Company, if any business other than (i) the consideration of the Accounts, Balance Sheet and Reports of the Board and the Auditors thereon (ii) the declaration of dividend, (iii) appointment of directors in place of those retiring, (iv) the appointment of, and fixing the remuneration of, the Auditors, is to be transacted, and in the case of any other meeting, in respect of any item of business, a statement setting out all material facts concerning each such item of business, including, in particular, the nature and extent of the interest, if any, therein of every director and manager, if any, where any such item of special business relates to, or affects any other company, the extent of shareholding interest in that other company or every director and manager, if any, of the Company shall also be set out in the statement if the extent of such Share-holding interest is not less than such percent, as may be prescribed, from time to time, under the Act, of the paid-up Share Capital of that other Company. Where any item of business consists of the according of approval of the members to any document at the meeting, the time and place, where such document can be inspected, shall be specified in the statement aforesaid.
96	The accidental omission to give any such notice as aforesaid to any of the members, or the non-receipt thereof shall not invalidate any resolution passed at any such meeting.
97	No general meeting, whether Annual or Extra-ordinary, shall be competent to enter upon, discuss or transact any business which has not been mentioned in the notice or notices upon which it was convened.
98	Subject to the provisions of the Act and these Articles, five(5) shareholders shall constitute quorum in Shareholders' Meetings of the Company if number of shareholders as on date of meeting is not more than One Thousand; Fifteen (15) shareholders shall constitute quorum in Shareholders' Meetings of the Company if number of shareholders as on date of meeting is more than One Thousand but not more than Five Thousand; Thirty (30) shareholders shall constitute quorum in Shareholders' Meetings of the Company if number of shareholders as on date of meeting exceeds five thousand.
99	A body corporate, being a member, shall be deemed to be personally present, if it is represented in accordance with and in the manner as may be prescribed by, the applicable provisions of the Act.

100	If, at the expiration of half an hour from the time appointed for holding a meeting of the Company, a quorum shall not be present, then the meeting, if convened by or upon the requisition of members, shall stand dissolved, but in any other case, it shall stand adjourned to such time on the following day or such other day and to such place, as the Board may determine, and, if no such time and place be determined, to the same day in the next week, at the same time and place in the city or town in which the office of the Company is, for the time being, situate, as the Board may determine, and, if at such adjourned meeting also, a quorum is not present, at the expiration of half an hour from the time appointed for holding the meeting, the members present shall be a quorum, and may transact the business for which the meeting was called.
101	The Chairman of the Board of Directors shall be entitled to take the chair at every general meeting, whether Annual or Extra-ordinary. If there be no such Chairman, or, if, at any meeting, he shall not be present within 15 (Fifteen) minutes of the time appointed for holding such meeting, then the members present shall elect another director as the Chairman of that meeting, and, if no director be present, or if all the Directors present decline to take the Chair, then the members present shall elect one among them to be the Chairman.
102	No business shall be discussed at any general meeting, except the election of a Chairman, whilst the Chair is vacant.
103	The Chairman, with the consent of the meeting, may adjourn any meeting, from time to time, and from place to place, in the city or town, in which the office of the Company is, for the time being, situate, but no business shall be transacted at any adjourned meeting, other than the business left unfinished, at the meeting, from which the adjournment took place.
104	At any general meeting, a resolution put to the vote of the meeting shall be decided on a show of hands, unless a poll is demanded, before or on the declaration of the result of the show of hands, by any member or members present in person or by proxy and holding Shares in the Company, which confer a power to vote on the resolution not being less than one-tenth or such other proportion as may statutorily be prescribed, from time to time, under the Act, of the total voting power, in respect of the resolution or on which an aggregate sum of not less than Rs. 500,000/- or such other sum as may statutorily be prescribed, from time to time, under the Act, has been paid up, and unless a poll is demanded, a declaration by the Chairman that a resolution has, on a show of hands, been carried unanimously or by a particular majority, or has been lost and an entry to that effect in the minutes book of the Company shall be conclusive evidence of the fact, without proof of the number or proportion of the votes recorded in favour of or against that resolution.
105	In the case of an equality of votes, the Chairman shall, both on a show of hands and at a poll, if any, have a casting vote in addition to the vote of votes, if any, to which he may be entitled as a member if he is.
106	If a poll is demanded as aforesaid, the same shall, subject to Article 108 hereunder, be taken at Delhi or, if not desired, then at such other place as may be decided by the Board, at such time not later than 48 (Forty-eight) hours from the time when the demand was made and place in the city or town in which the office of the Company is, for the time being, situate, and, either by open voting or by ballot, as the Chairman shall direct, and either at once or after an interval or adjournment, or otherwise, and the result of the poll shall be deemed to be resolution of the meeting at which the poll was demanded. The demand for a poll may be withdrawn at any time by the persons, who made the demand.
107	Where a poll is to be taken, the Chairman of the meeting shall appoint one or, at his discretion, two scrutinisers, who may or may not be members of the Company to scrutinise the votes given on the poll and to report thereon to him, subject to that one of the scrutinisers so appointed shall always be a member, not being an officer or employee of the Company, present at the meeting, provided that such a member is available and willing to be appointed. The Chairman shall have power, at any time, before the result of the poll is declared, to remove a scrutiniser from office and fill the vacancy so caused in the office of a scrutiniser arising from such removal or from any other cause.
108	Any poll duly demanded on the election of a Chairman of a meeting or on any question of adjournment of the meeting shall be taken forthwith at the same meeting.
109	The demand for a poll, except on questions of the election of the Chairman and of an adjournment thereof, shall not prevent the continuance of a meeting for the transaction of any business other than the question on which the poll has been demanded.
	Votes of Members
110	No member shall be entitled to vote either personally or by proxy at any general meeting or meeting of a class of Shareholders either upon a show of hands or upon a poll in respect of any

	Shares registered in his name on which any calls or other sums presently payable by him have not been paid or in regard to which the Company has, or has exercised, any right of lien.
111	Subject to the provisions of these Articles and without prejudice to any special privileges or restrictions so to voting, for the time being, attached to any class of Shares, for the time being, forming part of the capital of the Company, every member, not disqualified by the last preceding Article shall be entitled to be present, speak and vote at such meeting, and, on a show of hands, every member, present in person, shall have one vote and, upon a poll, the voting right of every member present in person or by proxy shall be in proportion to his Share of the paid-up Equity Share Capital of the Company. Provided, however, if any preference Shareholder be present at any meeting of the Company, subject to the provision of section 47, he shall have a right to vote only on resolutions, placed before the meeting, which directly affect the rights attached to his Preference Shares.
112	On a poll taken at a meeting of the Company, a member entitled to more than one vote, or his proxy or other person entitled to vote for him, as the case may be, need not, if he votes, use all his votes or cast in the same way all the votes, he uses.
113	A member of unsound mind or in respect of whom an order has been made by a court having jurisdiction in lunacy, may vote, whether on a show of hands or on a poll, by his committee or other legal guardian; and any such committee or guardian may, on a poll, vote by proxy. If any member be a minor, the vote, in respect of his Share or Shares, be used by his guardian, or any one of his guardians, if more than one, to be selected, in the case of dispute, by the Chairman of the meeting.
114	If there be joint registered holders of any Shares, any one of such persons may vote at any meeting or may appoint another person, whether a member or not, as his proxy, in respect of such Shares, as if he were solely entitled thereto, but the proxy so appointed shall not have any right to speak at the meeting and, if more than one of such joint holders be present at any meeting, then one of the said persons so present, whose name stands higher on the Register, shall alone be entitled to speak and to vote in respect of such Shares, but the other of the joint holders shall be entitled to be present at the meeting. Several executors or administrators of a deceased member in whose name Shares stand shall, for the purpose of these Articles, be deemed joint holders thereof.
115	Subject to the provisions of these Articles, votes may be given either personally or by proxy. A body corporate, being a member, may vote either by a proxy or by a representative, duly authorised, in accordance with the applicable provisions, if any, of the Act, and such representative shall be entitled to exercise the same rights and powers, including the right to vote by proxy, on behalf of the body corporate, which he represents, as that body corporate could exercise, if it were an individual member.
116	Any person entitled, under the Article 61 hereinabove, to transfer any Share, may vote, at any general meeting, in respect thereof, in the same manner, as if he were the registered holder of such Shares provided that forty-eight hours at least before the time of holding the meeting or adjourned meeting, as the case may be, at which he proposes to vote, he shall satisfy the Directors of his right to transfer such Shares and give such indemnity, if any, as the Directors may require or the Directors shall have provisionally admitted his right to vote at such meeting in respect thereof.
117	Every proxy, whether a member or not, shall be appointed, in writing, under the hand of the appointer or his attorney, or if such appointer is a body corporate under the common seal of such corporate, or be signed by an officer or officers or any attorney duly authorised by it or them, and, for a member of unsound mind or in respect of whom an order has been made by a court having jurisdiction in lunacy, any committee or guardian may appoint such proxy. The proxy so appointed shall not have a right to speak on any matter at the meeting.
118	An instrument of Proxy may state the appointment of a proxy either for the purpose of a particular meeting specified in the instrument and any adjournment thereof or it may appoint for the purpose of every meeting of the Company or of every meeting to be held before a date specified in the instrument and every adjournment of any such meeting.
119	A member, present by proxy, shall be entitled to vote only on a poll.
120	The instrument appointing a proxy and a Power of Attorney or other authority, if any, under which it is signed or a notarised certified copy of that power of authority, shall be deposited at the Office not later than 48 (Forty-eight) hours before the time for holding the meeting at which the person named in the Instrument proposes to vote, and, in default, the Instrument of Proxy shall not be treated as valid. No instrument appointing a proxy shall be a valid after the expiration of 12 (Twelve) months or such other period as may be prescribed under the Laws,

	for the time being, in force, or if there shall be no law, then as may be decided by the Directors, from the date of its execution.
121	Every Instrument of proxy, whether for a specified meeting or otherwise, shall, as nearly as circumstances thereto will admit, be in any of the forms as may be prescribed from time to time.
122	A vote, given in accordance with the terms of an Instrument of Proxy, shall be valid notwithstanding the previous death of insanity of the principal, or revocation of the proxy or of any power of Attorney under which such proxy was signed or the transfer of the Share in respect of which the vote is given, provided that no intimation, in writing, of the death or insanity, revocation or transfer shall have been received at the Office before the meeting.
123	No objections shall be made to the validity of any vote, except at any meeting or poll at which such vote shall be tendered, and every vote, whether given personally or by proxy, or not disallowed at such meeting or on a poll, shall be deemed as valid for all purposes of such meeting or a poll whatsoever.
124	The Chairman, present at the time of taking of a poll, shall be the sole judge of the validity of every vote tendered at such poll.
125	(i) The Company shall cause minutes of all proceeding of every general meeting to be kept by making, within 30 (Thirty) days of the conclusion of every such meeting concerned, entries thereof in books kept, whether manually in the registers or by way of loose leaves bound together, as may be decided by the Board of Directors, for that purpose with their pages consecutively numbered. (ii) Each page of every such book shall be initialled or signed and the last page of the record of proceedings of each meeting in such book shall be dated and signed by the Chairman of the same meeting within the aforesaid period of thirty days or in the event of the death or inability of that Chairman within that period, by a director duly authorised by the Board for that purpose. (iii) In no case the minutes of proceedings of a meeting shall be attached to any such book as aforesaid by pasting or otherwise. (iv) The minutes of each meeting shall contain a fair and correct summary of the proceedings there at. (v) All appointments made at any meeting aforesaid shall be included in the minutes of the meeting. (vi) Nothing herein contained shall require or to be deemed to require the inclusion, in any such minutes, of any matter, which, in the opinion of the Chairman of the meeting, (i) is or could reasonably be regarded as, defamatory of any person, or (ii) is irrelevant or immaterial to the proceedings, or (iii) is detrimental to the interests of the Company. The Chairman of the meeting shall exercise an absolute discretion in regard to the inclusion or non-inclusion of any matter in the minutes on the aforesaid grounds. (vii) Any such minutes shall be conclusive evidence of the proceedings recorded therein. (viii) The book containing the minutes of proceedings of general meetings shall be kept at the Office of the Company and shall be open, during business hours, for such periods not being less in the aggregate than 2 (Two) hours, in each day, as the Directors determine, to the inspection of any member without charge. (ix) The Company shall also provide e-voting facility to the Shareholders of the Company in terms of the provisions of the Companies (Management and Administration) Rules, 2014, the SEBI Listing Regulations or any other Law, if applicable to the Company.
	Directors
126	Until otherwise determined by a general meeting of the Company and, subject to the applicable provisions of the Act, the number of Directors) shall not be less than three nor more than fifteen, provided that the Company may appoint more than fifteen directors after passing a special resolution. The Company shall have at the minimum such number of independent Directors on the Board of the Company, as may be required in terms of the provisions of applicable law. In

	addition, not less than two-thirds of the total number of Directors shall be persons whose period of office is liable to determination by retirement of Directors by rotation. The Company shall also comply with the provisions of the Companies (Appointment and Qualification of Directors) Rules, 2014 and the provisions of the SEBI Listing Regulations. The First directors of the Company are: 1. Mr. DATTATRAY KASHINATH KULKARNI 2. Mrs. DIPALI DATTATRAYA KULKARNI
127	(i) Whenever, Directors enter into a contract with any Government, whether central, state or local, bank or financial institution or any person or persons (hereinafter referred to as "**the appointer**") for borrowing any money or for providing any guarantee or security or for technical collaboration or assistance or for underwriting or enter into any other arrangement whatsoever or in case of Promoters of the Company (hereinafter referred as "**Promoters**"), the Directors shall have, subject to the provisions of Section 152 and other applicable provisions, if any, of the Act, the power to agree that such appointer or Promoters shall have the right to appoint or nominate by a notice, in writing, addressed to the Company, one or more Directors on the Board (hereinafter referred to as "**Special Director**") for such period and upon such terms and conditions, as may be mentioned in the agreement if any, and that such Director or Directors may or may not be liable to retire by rotation, nor be required to hold any qualification Shares. The Directors may also agree that any such Director or Directors may be removed, from time to time, by the appointer or Promoter, entitled to appoint or nominate them and the appointer or Promoter may appoint another or others in his or their place and also fill in vacancy, which may occur as a result of any such director or directors ceasing to hold that office for any reasons whatsoever. The Directors, appointed or nominated under this Article, shall be entitled to exercise and enjoy all or any of the rights and privileges exercised and enjoyed by the directors of the Company including payment of remuneration, sitting fees and travelling expenses to such director or directors, as may be agreed by the Company with the appointer. (ii) The Company shall have such number of Independent Directors on the Board or Committees of the Board of the Company, as may be required in terms of the provisions of Section 149 of the Act and the Companies (Appointment and Qualification of Directors) Rules, 2014, SEBI Listing Regulations or any other Law, as may be applicable. Further, the appointment of such Independent Directors shall be in terms of the aforesaid provisions of Law and subject to the requirements prescribed under the SEBI Listing Regulations. The Special Directors, appointed under the preceding Article, shall be entitled to hold Office until required by the Government, person, firm, body corporate promoters or financial institution/s who may have appointed them. A Special Director shall not be required to hold any qualification Share(s) in the Company. As and when a Special Director vacates Office, whether upon request as aforesaid or by death, resignation or otherwise, the Government, person, firm or body corporate promoters or financial institution, who appointed such Special Director, may appoint another director in his place. Every nomination, appointment or removal of a Special Director or other notification, under this Article, shall be in writing and shall, in the case of the Government, be under the hand of a Secretary or some other responsible and authorised official to such Government, and in the case of a company or financial institution, under the hand of director of such company or institution duly authorised in that behalf by a resolution of the Board of Directors. Subject as aforesaid, a Special Director shall be entitled to the same rights and privileges and be subject to the same of obligations as any other director of the Company.
128	If it is provided by the Trust Deed, securing or otherwise, in connection with any issue of Debentures of the Company, that any person or persons shall have power to nominate a director of the Company, then in the case of any and every such issue of Debentures, the person or persons having such power may exercise such power, from time to time, and appoint a director accordingly. Any director so appointed is hereinafter referred to as "the Debenture Director". A Debenture Director may be removed from Office, at any time, by the person or persons in whom, for the time being, is vested the power, under which he was appointed, and another director may be appointed in his place. A Debenture Director shall not be required to hold any qualification Share(s) in the Company.

129	Subject to the provisions of section 161(2) of the Act, 2013, The Board may appoint an alternate director to act for a director (hereinafter called "the Original Director") during his absence for a period of not less than 3 (Three) months or such other period as may be, from time to time, prescribed under the Act, from India, in which the meetings of Board are ordinarily held. An alternate director appointed, under this Article, shall not hold Office for a period longer than that permissible to the Original Director in whose place he has been appointed and shall vacate Office, if and when the Original Director returns to that State. If the term of Office of the Original Director is determined before he so returns to that State, any provisions in the Act or in these Articles for the automatic re-appointment of a retiring director, in default of another appointment, shall apply to the original director and not to the alternate director.
130	Subject to the provisions of section 161(1) of the Act, 2013, the Board shall have power, at any time and from time to time, to appoint any other qualified person to be an Additional Director, but so that the total number of Directors shall not, at any time, exceed the maximum fixed under these Articles. Any such Additional Director shall hold Office only upto the date of the next Annual General Meeting.
131	Subject to the provisions of section 152 and 162 of the Act, 2013, the Board shall have power, at any time and from time to time, to appoint any other qualified person to be a director to fill a casual vacancy. Any person so appointed shall hold Office only upto the date, upto which the director in whose place he is appointed would have held Office if it had not been vacated by him.
132	A director shall not be required to hold any qualification Share(s) in the Company.
133	(i) Subject to the provisions of section 196, 197 and read with schedule V of the Companies Act, 2013and other provisions of the Act, the Rules, Law including the provisions of the SEBI Listing Regulations, a Managing Director or Director who is in the Whole-time employment of the Company may be paid remuneration either by way of a monthly payment or at a specified percentage of the net profits of the Company or partly by one way and partly by the other, or in any other manner, as may be, from time to time, permitted under the Act or as may be thought fit and proper by the Board or, if prescribed under the Act, by the Company in general meeting. (ii) Subject generally to the provisions of the Act, and, in the case of the Managing Director, subject to the provisions of the Articles herein below, as may be applicable, the Board shall have power to pay such remuneration to a director for his services, Whole-time or otherwise, rendered to the Company or for services of professional or other nature rendered by him, as may be determined by the Board. If any director, being willing, shall be called upon to perform extra services or make any special exception in going to or residing at a place other than the place where the director usually resides, or otherwise in or for the Company's business or for any of the purpose of the Company, then, subject to the provisions of the Act, the Board shall have power to pay to such director such remuneration, as may be determined by the Board. (iii) Subject to the provisions of the Act, a director, who is neither in the Whole-time employment nor a Managing Director, may be paid remuneration either; (a) by way of monthly, quarterly or annual payment with the approval of the Central Government; or (b) by way of commission, if the Company, by a special resolution, authorises such payment. The fee payable to a director, excluding a Managing or Whole time Director, if any, for attending a meeting of the Board or Committee thereof shall be such sum, as the Board may, from time to time, determine, but within and subject to the limit prescribed by the Central Government pursuant to the provisions, for the time being, under the Act.
134	The Board may allow and pay to any director such sum, as the Board may consider fair compensation, for travelling, boarding, lodging and other expenses, in addition to his fee for attending such meeting as above specified and if any director be called upon to go or reside out of the ordinary place of his residence for the Company's business, he shall be entitled to be repaid and reimbursed of any travelling or other expenses incurred in connection with business of the Company. The Board may also permit the use of the Company's car or other vehicle, telephone(s) or any such other facility, by the director, only for the business of the Company.

135	The continuing Directors may act, notwithstanding, any vacancy in their body but if, and so long as their number is not reduced below the minimum number fixed by Article 111 hereof. the continuing Directors, not being less than two, may only act, for the purpose of increasing the number of Directors to that prescribed minimum number or of summoning a general meeting but for no other purpose.
136	The office of director shall be vacated, pursuant to the provisions of section 164 and section 167 of the Companies Act, 2013. Further, the Director may resign his office by giving notice to the Company pursuant to section 168 of the Companies Act, 2013.
137	The Company shall keep a Register, in accordance with Section 189(1) of the Act, and within the time as may be prescribed, enter therein such of the particulars, as may be relevant having regard to the application thereto of Section184 or Section 188 of the Act, as the case may be. The Register aforesaid shall also specify, in relation to each director of the Company, names of the bodies corporate and firms of which notice has been given by him, under the preceding two Articles. The Register shall be kept at the Office of the Company and shall be open to inspection at such Office, and the extracts may be taken there from and copies thereof may be required by any member of the Company to the same extent, in the same manner, and on payment of the same fee as in the case of the Register of Members of the Company and the provisions of Section 189(3) of the Act shall apply accordingly.
138	A director may be or become a director of any other Company promoted by the Company or in which it may be interested as a vendor, Shareholder or otherwise, and no such director shall be accountable for any benefits received as director or Shareholder of such Company except in so far as the provisions of the Act may be applicable.
139	(i) At every Annual General Meeting of the Company, one-third of such of the Directors, for the time being, as are liable to retire by rotation or if their number is not three or a multiple of three, the number nearest to one-third shall retire from Office. The Independent, Nominee, Special and Debenture Directors, if any, shall not be subject to retirement under this clause and shall not be taken into account in determining the rotation of retirement or the number of directors to retire, subject to Section 152 and other applicable provisions, if any, of the Act. Subject to Section 152 of the Act, the directors, liable to retire by rotation, at every annual general meeting, shall be those, who have been longest in Office since their last appointment, but as between the persons, who became Directors on the same day, and those who are liable to retire by rotation, shall, in default of and subject to any agreement among themselves, be determined by lot.
140	A retiring director shall be eligible for re-election and shall act as a director throughout the meeting at which he retires.
141	Subject to Section 152 of the Act, the Company, at the general meeting at which a director retires in manner aforesaid, may fill up the vacated Office by electing a person thereto.
142	(i) If the place of retiring director is not so filled up and further the meeting has not expressly resolved not to fill the vacancy, the meeting shall stand adjourned till the same day in the next week, at the same time and place or if that day is a public holiday, till the next succeeding day, which is not a public holiday, at the same time and place. (ii) If at the adjourned meeting also, the place of the retiring director is not filled up and that meeting also has not expressly resolved not to fill the vacancy, the retiring director shall be deemed to have been re-appointed at the adjourned meetings, unless: (a) at that meeting or at the previous meeting, resolution for the re-appointment of such director has been put to the meeting and lost; (b) the retiring director has, by a notice, in writing, addressed to the Company or its Board, expressed his unwillingness to be so re-appointed; (c) he is not qualified, or is disqualified, for appointment. (d) a resolution, whether special or ordinary, is required for the appointment or reappointment by virtue of any provisions of the Act; or Section 162 of the Act is applicable to the case.

143	Subject to the provisions of Section 149 of the Act, the Company may, by special resolution, from time to time, increase or reduce the number of directors, and may alter their qualifications and the Company may, subject to the provisions of Section 169 of the Act, remove any director before the expiration of his period of Office and appoint another qualified person in his stead. The person so appointed shall hold Office during such time as the director, in whose place he is appointed, would have held, had he not been removed.
144	(i) No person, not being a retiring director, shall be eligible for appointment to the office of director at any general meeting unless he or some member, intending to propose him, has, not less than 14 (Fourteen) days or such other period, as may be prescribed, from time to time, under the Act, before the meeting, left at the Office of the Company, a notice, in writing, under his hand, signifying his candidature for the Office of director or an intention of such member to propose him as a candidate for that office, along with a deposit of Rupees One lakh or such other amount as may be prescribed, from time to time, under the Act, which shall be refunded to such person or, as the case may be, to such member, if the person succeeds in getting elected as a director or gets more than twenty-five per cent of total valid votes cast either on show of hands or on poll on such resolution. (ii) Every person, other than a director retiring by rotation or otherwise or a person who has left at the Office of the Company a notice under Section 160 of the Act signifying his candidature for the Office of a director, proposed as a candidate for the Office of a director shall sign and file with the Company, the consent, in writing, to act as a director, if appointed. A person, other than a director re-appointed after retirement by rotation immediately on the expiry of his term of Office, or an Additional or Alternate Director, or a person filling a casual vacancy in the Office of a director under Section 161 of the Act, appointed as a director or reappointed as a director immediately on the expiry of his term of Office, shall not act as a director of the Company, unless he has, within thirty days of his appointment, signed and filed with the Registrar his consent, in writing, to act as such director.
145	The Company shall keep at its Office a Register containing the particulars of its directors and key managerial personnel and their shareholding as mentioned in Section 170 of the Act, and shall otherwise comply with the provisions of the said Section in all respects.
146	Every director and Key Managerial Personnel within a period of thirty days of his appointment, or relinquishment of his office, as the case may be, disclose to the company the particulars specified in sub-section (1) of section 184 relating to his concern or interest in any company or companies or bodies corporate (including shareholding interest), firms or other association which are required to be included in the register under that section 189 of the Companies Act, 2013.
	Managing Director
147	(i) Subject to the provisions of the Act and of these Articles, the Board shall have power to appoint, from time to time, any of its member as a Managing Director or Managing Directors of the Company for a fixed term, not exceeding 5 (Five) years at a time, and upon such remuneration and terms and conditions as the Board thinks fit, and subject to the provisions of any contract between him and the Company, remove or dismiss him from office and appoint another in his place and subject to the provisions of the succeeding Article hereof, the Board may, by resolution, vest in such Managing Director or Managing Directors such of the powers hereby vested in the Board generally, as it thinks fit, and such powers may be made exercisable for such period or periods; and upon such conditions and subject to such restrictions, as it may determine. The remuneration of a Managing Director may be by way of salary and/or allowances, commission or participation in profits or perquisites of any kind, nature or description, or by any or all of these modes, or by any other mode(s) not expressly prohibited by the Act or the Rules made thereunder, or any notification or circular issued under the Act.
148	Subject to the superintendence, directions and control of the Board, the Managing Director or Managing Directors shall exercise the powers, except to the extent mentioned in the matters, in respect of which resolutions are required to be passed only at the meeting of the Board, under Section 179 of the Act and the rules made thereunder.
	Proceedings of the Board of Directors
149	Unless decided by the Board to the contrary, depending upon the circumstances of the case, a Managing Director shall not, while he continues to hold that office, be subject to retirement by

	rotation, in accordance with the Article 124 hereof. If he ceases to hold the office of director, he shall ipso-facto and forthwith ceases to hold the office of Managing Director.
150	The Directors may meet together as a Board for the despatch of business, from time to time, and shall so meet at least once in every 3 (Three) months and at least 4 (Four) such meetings shall be held in every year in such a manner that not more than one hundred and twenty days (120) days shall intervene between two consecutive meetings of the Board. The Directors may adjourn and otherwise regulate their meetings as they think fit, subject to the provisions of the Act. The Board of directors may participate in a meeting of the Board either in person or through video conferencing or other audio-visual means, as may be prescribed, which are capable of recording and recognising the participation of the directors and of recording and storing the proceedings of such meetings along with date and time subject to the rules as may be prescribed.
151	Not less than seven (7) days' Notice of every meeting of the Board may be given, in writing, in writing to every director at his address registered with the company and such notice shall be sent by hand delivery or by post or by electronic means. Subject to the provisions of section 173(3) meeting may be called at shorter notice.
152	Subject to Section 174 of the Act, the quorum for a meeting of the Board shall be one-third of its total strength, excluding Directors, if any, whose places may be vacant at the time and any fraction contained in that one-third being rounded off as one, or two directors, whichever is higher, provided that where, at any time, the number of interested directors exceeds or is equal to two-thirds of the total strength the number of the remaining directors, that is to say, the number of directors who are not interested, present at the meeting, being not less than two, shall be the quorum, during such time.
153	If a meeting of the Board could not be held for want of quorum, then the meeting shall automatically stand adjourned for 30 minutes in the same day and at same place.
154	A director may, at any time, or Secretary shall, as and when directed by the any of the Directors to do so, convene a meeting of the Board, by giving a notice, in writing, to every other director.
155	The Board may, from time to time, elect one of their members to be the Chairman of the Board and determine the period for which he is to hold the office. If at any meeting of the Board, the Chairman is not present at a time appointed for holding the same, the directors present shall choose one of them, being present, to be the Chairman of such meeting.
156	Subject to the restrictive provisions of any agreement or understanding as entered into by the Company with any other person(s) such as the collaborators, financial institutions, etc., the questions arising at any meeting of the Board shall be decided by a majority of the votes of the directors present there at and, also subject to the foregoing, in the case of an equality of votes, the Chairman shall have a second or casting vote.
157	A meeting of the Board, at which a quorum is present, shall be competent to exercise all or any of the authorities, powers and discretions, which, by or under the Act or the Articles of the Company, are, for the time being, vested in or exercisable by the Board generally.
158	Applicable provisions of the Act, the Rules, Law including the provisions of the SEBI Listing Regulations. Subject to the restrictions contained in Section 179 of the Act 2013 and the rules made thereunder, the Board may delegate any of their powers to the committee of the Board, consisting of such number of its body, as it thinks fit, and it may, from time to time, revoke and discharge any such committee of the Board, either wholly or in part and either as to persons or purposes, but every committee of the Board, so formed, shall, in the exercise of the powers so delegated, conform to any regulations that may, from time to time, be imposed on it by the Board. All acts done by any such committee of the Board, in conformity with such regulations, and in fulfilment of the purposes of their appointment but not otherwise, shall have the like force and effect as if were done by the Board.
159	The meetings and proceedings of any meeting of such Committee of the Board, consisting of two or more members, shall be governed by the provisions contained herein for regulating the meetings and proceedings of the meetings of the directors, so far as the same are applicable thereto and are not superseded by any regulations made by the Directors under the last preceding Article.
160	No resolution shall be deemed to have been duly passed by the Board or by a Committee thereof by circulation, unless the resolution has been circulated in draft, together with the necessary papers, if any, to all the directors or to all the members of the Committee, then in India, not being less in number than the quorum fixed for a meeting of the Board or Committee, as the case may be, and to all the directors or to all the members of the Committee, at their usual addresses in India and has been approved, in writing, by such of the directors or members of the

	Committee as are then in India, or by a majority of such of them, as are entitled to vote on the resolution.
161	All acts done by any meeting of the Board or by a Committee of the Board, or by any person acting as a director shall notwithstanding that it shall, afterwards, be discovered that there was some defect in the appointment of such director or persons acting as aforesaid or that they or any of them were or was, as the case may be, disqualified or had vacated office or that the appointment of any of them was disqualified or had vacated office or that the appointment of any of them had been terminated by virtue of any provisions contained in the Act or in these Articles, be as valid as if every such person had duly been appointed and was qualified to be a director and had not vacated his office or his appointed had not been terminated, provided that nothing in this Article shall be deemed to give validity to any act or acts done by a director or directors after his or their appointment(s) has or have been shown to the Company to be invalid or to have terminated.
162	(i) The Company shall cause minutes of all proceedings of every meeting of the Board and the Committee thereof to be kept by making, within 30 (Thirty) days of the conclusion of each such meeting, entries thereof in books kept, whether manually in the registers or by way of loose leaves bound together, as may be decided by the Board of Directors, for that purpose with their pages consecutively numbered. (ii) Each page of every such book shall be initialled or signed and the last page of the record of proceedings of each meeting in such book shall be dated and signed by the Chairman of the said meeting or the Chairman of the next succeeding meeting. (iii) In no case, the minutes of proceedings of a meeting shall be attached to any such book as aforesaid by pasting or otherwise. (iv) The minutes of each meeting shall contain a fair and correct summary of the proceedings thereat. (v) All appointment made at any of the meetings aforesaid shall be included in the minutes of the meeting. (vi) The minutes shall also contain: (a) the names of the Directors present at the meeting; and (b) in the case of each resolution passed at the meeting, the names of the directors, if any dissenting from or not concurring in the resolution. (vii) Nothing contained in sub-clauses (i) to (vii) shall be deemed to require the inclusion in any such minutes of any matter which, in the opinion of the Chairman of the meeting – (a) is, or could reasonably be regarded as, defamatory of any person; (b) is irrelevant or immaterial to the proceedings; or (c) is detrimental to the interests of the Company; and that the Chairman shall exercise an absolute discretion with regard to the inclusion or non-inclusion of any matter in the minutes on the ground specified in this sub-clause. Minutes of the meetings kept in accordance with the aforesaid provisions shall be an evidence of the proceedings recorded therein.
163	Without prejudice to the general powers as well as those under the Act, and so as not in any way to limit or restrict those powers, and without prejudice to the other powers conferred by these Articles or otherwise, it is hereby declared that the Directors shall have, inter alia, the following powers, that is to say, power - (i) to pay the costs, charges and expenses, preliminary and incidental to the promotion, formation, establishment and registration of the Company; (ii) to pay and charge, to the account of the Company, any commission or interest lawfully payable thereon under the provision of the Act;

	(iii)	subject to the provisions of the Act, to purchase or otherwise acquire for the Company any property, rights or privileges, which the Company is authorised to acquire, at or for such price or consideration and generally on such terms and conditions as they may think fit and being in the interests of the Company, and in any such purchase or other acquisition to accept such title or to obtain such right as the directors may believe or may be advised to be reasonably satisfactory;
	(iv)	at their discretion and subject to the provisions of the Act, to pay for any property, right or privileges acquired by or services rendered to the Company, either wholly or partially, in cash or in Shares, Bonds, Debentures, mortgages, or other securities of the Company, and any such Shares may be issued either as fully paid up, with such amount credited as paid up thereon, as may be agreed upon, and any such bonds, Debentures, mortgages or other securities may either be specifically charged upon all or any part of the properties of the Company and its uncalled capital or not so charged;
	(v)	to secure the fulfilment of any contracts or engagement entered into by the Company or, in the interests or for the purposes of this Company, by, with or against any other Company, firm or person, by mortgage or charge of all or any of the properties of the Company and its uncalled capital, for the time being, or in such manner and to such extent as they may think fit;
	(vi)	to accept from any member, as far as may be permissible by law, a surrender of his Shares or any part thereof, whether under buy-back or otherwise, on such terms and conditions as shall be agreed mutually, and as may be permitted, from time to time, under the Act or any other Law or the Regulations, for the time being, in force,
	(vii)	to appoint any person to accept and hold in trust, for the Company, any property belonging to the Company, in which it is interested, or for any other purposes, and execute and do all such deeds and things as may be required in relation to any trust, and to provide for the remuneration of such trustee or trustees;
	(viii)	to institute, conduct, defend, compound or abandon any legal proceedings by or against the Company or its Officers, or otherwise concerning the affairs of the Company, and also to compound and allow time for payment or satisfaction of any debts, due and of any differences to arbitration and observe and perform any awards made thereon;
	(ix)	to act on behalf of the Company in all matters relating to bankruptcy and insolvents;
	(x)	to make and give receipts, releases and other discharges for moneys payable to the Company and for the claims and demands of the Company;
	(xi)	subject to the applicable provisions of the Act, to invest and deal with any moneys of the Company not immediately required for the purposes thereof upon such security, not being Shares of this Company, or without security and in such manner, as they may think fit, and from time to time, to vary or realise such investments, save as provided in Section 49 of the Act, all investments shall be made and held in the Company's own name;
	(xii)	to execute, in the name and on behalf of the Company, in favour of any director or other person, who may incur or be about to incur any personal liability whether as principal or surety, for the benefit or purposes of the Company, such mortgages of the Company's property, present and future, as they may think fit, and any such mortgage may contain a power of sale and such other powers, provisions, covenants and agreements as shall be agreed upon;
	(xiii)	to determine from time to time, who shall be entitled to sign, on behalf of the Company, bills, invoices, notes, receipts, acceptances, endorsements, cheques, dividend warrants, releases, contracts and or any other document or documents and to give the necessary authority for such purpose, and further to operate the banking or any other kinds of accounts, maintained in the name of and for the business of the Company;

	(xiv) to distribute, by way of bonus, incentive or otherwise, amongst the employees of the Company, a Share or Shares in the profits of the Company, and to give to any staff, officer or others employed by the Company a commission on the profits of any particular business or transaction, and to charge any such bonus, incentive or commission paid by the Company as a part of the operational expenditure of the Company; (xv) to provide for the welfare of directors or ex-directors, Shareholders, for the time being, or employees or ex-employees of the Company and their wives, widows and families or the dependents or connections of such persons, by building or contributing to the building of houses or dwellings, or grants of moneys, whether as a gift or otherwise, pension, gratuities, allowances, bonus, loyalty bonuses or other payments, also whether by way of monetary payments or otherwise, or by creating and from time to time, subscribing or contributing to provident and other association, institutions, funds or trusts and by providing or subscribing or contributing towards places of worship, instructions and recreation, hospitals and dispensaries, medical and other attendance and other assistance, as the Board shall think fit, and to subscribe or contribute or otherwise to assist or to guarantee money to charitable, benevolent, religious, scientific, national or other institutions or objects, which shall have any moral or other claim to support or aid by the Company, either by reason of locality or place of operations, or of public and general utility or otherwise; (xvi) before recommending any dividend, to set aside out of the profits of the Company such sums, as the Board may think proper, for depreciation or to a Depreciation Fund, or to an Insurance Fund, a Reserve Fund, Capital Redemption Fund, Dividend Equalisation Fund, Sinking Fund or any Special Fund to meet contingencies or to repay debentures or debenture-stock, or for special dividends or for equalising dividends or for repairing, improving, extending and maintaining any of the property of the Company and for such other purposes, including the purposes referred to in the preceding clause, as the Board may, in their absolute discretion, think conducive to the interests of the Company and, subject to the provisions of the Act, to invest the several sums so set aside or so much thereof, as required to be invested, upon such investments, other than shares of the Company, as they may think fit, and from time to time, to deal with and vary such investments and dispose of and apply and expend all or any part thereof for the benefit of the Company, in such manner and for such purposes, as the Board, in their absolute discretion, think conducive to the interests of the Company, notwithstanding, that the matter, to which the Board apply or upon which they expend the same, or any part thereof, may be matters to or upon which the capital moneys of the Company might rightly be applied or expended, and to divide the Reserve Fund into such special funds, as the Board may think fit, with full power to transfer the whole or any portion of a Reserve Fund or divisions of a Reserve Fund and with full powers to employ the assets constituting all or any of the above funds, including the Depreciation Fund, in the business of the Company or in the purchase of or repayment of debentures or debenture stock and without being bound to keep the same separate from the other assets and without being bound to pay interest on the same with power however to the Board at their discretion to pay or allow to the credit of such funds interest at such rate as the Board may think proper, subject to the provisions of the applicable laws, for the time being, in force. (xvii) to appoint and at their discretion, remove or suspend such general managers, secretaries, assistants, supervisors, clerks, agents and servants or other employees, in or for permanent, temporary or special services, as they may, from time to time, think fit, and to determine their powers and duties and to fix their salaries, emoluments or remuneration of such amount, as they may think fit. (xviii) to comply with the requirements of any local laws, Rules or Regulations, which, in their opinion, it shall, in the interests of the Company, be necessary or expedient to comply with.

	(xix) at any time, and from time to time, by power of attorney, under the Seal of the Company, to appoint any person or persons to be the attorney or attorneys of the Company, for such purposes and with such powers, authorities and discretions, not exceeding those vested in or exercisable by the Board under these presents and excluding the powers to make calls and excluding also except in their limits authorised by the Board the power to make loans and borrow moneys, and for such period and subject to such conditions as the Board may, from time to time, think fit, and any such appointment may, if the Board thinks fit, be made in favour of the members or in favour of any Company, or the Share-holders, directors, nominees, or managers of any Company or firm or otherwise in favour of any fluctuating body of persons whether nominated directly or indirectly by the Board and any such Power of Attorney may contain such powers for the protection of convenience of person dealing with such Attorneys, as the Board may think fit, and may contain powers enabling any such delegates all or any of the powers, authorities and discretions, for the time being, vested in them; (xx) Subject to the provisions of the Act, for or in relation to any of the matters, aforesaid or otherwise, for the purposes of the Company, to enter into all such negotiations and contracts and rescind and vary all such contracts, and execute and do all such acts, deeds and things in the name and on behalf of the Company, as they may consider expedient; from time to time, make, vary and repeal bylaws for the regulation of the business of the Company, its Officers and Servants.
	Management
164	The Company shall not appoint or employ, at the same time, more than one of the following categories of managerial personnel, namely (i) Managing Director, and (ii) Manager
	Chief Executive Officer, Manager, Company Secretary or Chief Financial Officer
165	Subject to the provisions of the Act, (i) A chief executive officer, manager, company secretary, chief financial officer may be appointed by the Board for such term, at such remuneration and upon such conditions as it may think fit; and any chief executive officer, manager, company secretary, chief financial officer so appointed may be removed by means of a resolution of the Board; (ii) A director may be appointed as chief executive officer, manager, company secretary, chief financial officer
166	A provision of the Act or these regulations requiring or authorising a thing to be done by or to a director and chief executive officer, manager, company secretary, chief financial officer shall not be satisfied by its being done by or to the same person acting both as director and as, or in place of, chief executive officer, manager, company secretary, chief financial officer.
	Copies of Memorandum and Articles to be sent to Members
167	Copies of the Memorandum and Articles of Association of the Company and other documents, referred to in Section 17 of the Act, shall be sent by the Company to every member, at his request, within 7 (Seven) days of the request, on payment, if required by the Board, of the sum of Re.1/- (Rupee One Only) or such other higher sum, as may be prescribed, from time to time, under the Act and further decided, from time to time, by the Board, for each such copy.
	Seal
168	(i) The Board shall provide a Common Seal for the purposes of the Company, and shall have power, from time to time, to destroy the same and substitute a new Seal in lieu thereof, and the Board shall provide for the safe custody of the Seal, for the time being, and that the Seal shall never be used except by the authority of the Board or a Committee of the Board previously given. The Common Seal of the Company shall be kept at its office or at such other place, in India, as the Board thinks fit. The seal, if any, shall not be affixed to any instrument except by the authority of a resolution of the Board or a committee of the Board authorised by it in that behalf, and except in the presence

	of such persons as the Board may authorise for the purpose and as may be required under applicable law.
	Dividend
169	The profits of the Company, subject to any special rights relating thereto created or authorised to be created by these Articles, and further subject to the provisions of these Articles, shall be divisible among the members in proportion to the amount of capital paid up or credited as paid up to the Shares held by them, respectively.
170	The Company, in general meeting, may declare that dividends be paid to the members according to their respective rights, but no dividends shall exceed the amount recommended by the Board, but the Company may, in general meeting, declare a smaller dividend than was recommended by the Board.
171	Subject to the applicable provisions of the Act, no dividend shall be declared or paid otherwise than out of profits of the financial year arrived at after providing for depreciation in accordance with the provisions of the Act or out of the profits of the Company for any previous financial year or years arrived at after providing for depreciation in accordance with these provisions and remaining undistributed or out of both provided that:- (i) if the Company has not provided for any previous financial year or years it shall, before declaring or paying a dividend for any financial year, provide for such depreciation out of the profits of the financial year or out of the profits of any other previous financial year or years; (ii) if the Company has incurred any loss in any previous financial year or years the amount of loss or an amount which is equal to the amount provided for depreciation for that year or those years whichever is less, shall be set off against the profits of the Company for the year for which the dividend is proposed to be declared or paid as against the profits of the Company for any financial year or years arrived at in both cases after providing for depreciation in accordance with the provisions of schedule II of the Act.
172	The Board may, from time to time, pay to the members such interim dividend, as in their judgement, the position of the Company justifies.
173	Where capital is paid in advance of calls, such capital may carry interest as may be decided, from time to time, by the Board, but shall not, in respect thereof, confer a right to dividend or to participate in profits.
174	All dividends shall be apportioned and paid proportionately to the amounts paid up on the shares during which any portion or portions of the period in respect of which the dividend is paid up; but if any Share is issued on the terms providing that it shall rank for dividend as from a particular date or on such preferred rights, such Share shall rank for dividend accordingly.
175	The Board may retain the dividends payable upon Shares in respect of which any person is, under the Article 61 hereinabove, entitled to become a member, or which any person under that article is entitled to transfer until such person shall become a member in respect of such Shares, or shall duly transfer the same and until such transfer of Shares has been registered by the Company, notwithstanding anything contained in any other provision of the Act or these Articles, the provisions of Section 206A of the Act or the corresponding section of Act, 2013 as and when notified shall apply.
176	Any one of several persons, who are registered as joint holders of any Share, may give effectual receipts for all dividends or bonus and payments on account of dividends or bonus or other moneys payable in respect of such Shares.
177	No member shall be entitled to receive payment of any interest or dividend in respect of his Share or Shares, whilst any money may be due or owing from him to the Company in respect of such Share or Shares or otherwise howsoever, either alone or jointly with any other person or persons, and the Board may deduct, from the interest or dividend payable to any member, all sums of money so due from him to the Company.
178	Subject to the applicable provisions, if any, of the Act, a transfer of Shares shall not pass the right to any dividend declared thereon and made effective from the date prior to the registration of the transfer.
179	Unless otherwise directed, any dividend may be paid up by cheque or warrant or by a pay-slip sent through the post to the registered address of the member or person entitled, or, in the case of joint holders, to that one of them first named in the Register in respect of the joint holdings. Every such cheque or warrant shall be made payable to the order of the person to whom it is sent. The Company shall not be liable or responsible for any cheque or warrant or pay-slip lost in transmission or for any dividend lost to the member or person entitled thereto due to or by

	the forged endorsement of any cheque or warrant or the fraudulent recovery of the dividend by any other means.
180	(i) If the Company has declared a dividend but which has not been paid or claimed within 30 (Thirty) days from the date of declaration the Company shall transfer the total amount of dividend which remains unpaid or unclaimed within the said period of 30 (Thirty) days a special account to be opened by the Company in that behalf in any scheduled Bank called "the Unpaid Dividend Account of SHREE SIDDHIVINAYAK GREENTECH INDUSTRIES LIMITED". The Company shall within a period of ninety days of making any transfer of an amount to the Unpaid Dividend Account, prepare a statement containing the names, their last known addresses and the unpaid dividend to be paid to each person and place it on the website of the Company and also on any other website approved by the Central Government, for this purpose. No unclaimed or unpaid dividend shall be forfeited by the Board before the claim becomes barred by law. Any money transferred to the unpaid dividend account of the Company which remains unpaid or unclaimed for a period of 7 (Seven) years, from the date of such transfer shall be transferred by the Company to the Fund known as the Investor Education and Protection Fund established under sub section (1) of Section 125 of the Act.
181	Subject to the provisions of the Act, no unpaid dividend shall bear interest as against the Company.
182	Any general meeting declaring a dividend may, on the recommendation of the Directors, make a call on the members of such amount as the meeting decides, but so that the call on each member shall not exceed the dividend payable to him and so that the call be made payable at the same time as the dividend and the dividend may, if so arranged between the Company and the members, be set off against the calls.
	Capitalisation
183	(i) The Company, in general meeting, may resolve that any moneys, investments or other assets forming part of the undivided profits of the Company standing to the credit of the Reserve Fund, or any Capital Redemption Reserve Account or in the hands of the Company and available for dividend, or representing premium received on the issue of Shares and standing to the credit of the Share Premium Account, be capitalised and distributed amongst such of the Shareholders as would be entitled to receive the same, if distributed by way of dividend, and in the same proportion on the footing that they become entitled thereto as capital, and that all or any part of such capitalised fund be applied, on behalf of such Shareholders, in paying up in full either at par or at such premium, as the resolution may provide, any unissued Shares or Debentures or Debenture stock of the Company which shall be distributed accordingly on in or towards payment of the uncalled liability on any issued Shares or Debentures, stock and that such distribution or payment shall be accepted by such Shareholders in full satisfaction of their interest in the said capitalised sum, provided that a Share Premium Account and a Capital Redemption Reserve Account may, for the purposes of this Article, only be applied for the paying of any unissued Shares to be issued to members of the Company as, fully paid up, bonus Shares. (ii) A general meeting may resolve that any surplus moneys arising from the realisation of any capital assets of the Company, or any investments representing the same, or any other undistributed profits of the Company, not subject to charge for income tax, be distributed among the members on the footing that they receive the same as capital. (iii) For the purpose of giving effect to any resolution under the preceding paragraphs of this Article, the Board may settle any difficulty, which may arise, in regard to the distribution, as it thinks expedient, and, in particular, may issue fractional certificates and may fix the value for distribution of any specific assets, and may determine that such cash payments shall be made to any members upon the footing of the value so fixed or that fraction of value less than Rs.10/- (Rupees Ten Only) may be disregarded in order to adjust the rights of all parties, and may vest any such cash or specific assets in trustees upon such trusts for the person entitled to the dividend or capitalised funds, as may seem expedient to the Board. Where requisite, a proper contract shall be delivered to the Registrar for registration in accordance with Section 75 of the Act and the Board may appoint any

	person to sign such contract, on behalf of the persons entitled to the dividend or capitalised fund, and such appointment shall be effective.
	Borrowing Powers
184	Subject to the provisions of the Act, the Board may from time to time, at their discretion raise or borrow or secure the payment of any sum or sums of money for and on behalf of the Company. Any such money may be raised or the payment or repayment thereof may be secured in such manner and upon such terms and conditions in all respect as the Board may think fit by promissory notes or by opening loan or current accounts or by receiving deposits and advances at interest with or without security or otherwise and in particular by the issue of bonds, perpetual or redeemable debentures of the Company charged upon all or any part of the property of the Company (both present and future) including its uncalled capital for the time being or by mortgaging or charging or pledging any lands, buildings, machinery, plant, goods or other property and securities of the Company or by other means as the Board deems expedient.
185	The Board of Directors shall not except with the consent of the Company by way of a special resolution, borrow moneys where the moneys to be borrowed together with the moneys already borrowed by the Company (apart from temporary loans obtained from the Company's bankers in the ordinary course of business) exceeds the aggregate of paid up capital of the Company and its free reserves.
186	Subject to the Act and the provisions of these Articles, any bonds, debentures, debenture-stock or other securities issued or to be issued by the Company shall be under the control of the Board, who may issue them upon such terms and conditions and in such manner and for such consideration as the Board shall consider to be for the benefit of the Company.
	Accounts
187	The Company shall keep at the Office or at such other place in India, as the Board thinks fit and proper, books of account, in accordance with the provisions of the Act with respect to: (i) all sums of money received and expended by the Company and the matters in respect of which the receipt and expenditure take place; (ii) all sales and purchases of goods by the Company; (iii) the assets and liabilities of the Company; (iv) Such particulars, if applicable to this Company, relating to utilisation of material and/or labour or to other items of cost, as may be prescribed by the Central Government. Where the Board decides to keep all or any of the books of account at any place, other than the Office of the Company, the Company shall, within 7 (Seven) days, or such other period, as may be fixed, from time to time, by the Act, of the decision, file with the Registrar, a notice, in writing, giving the full address of that other place. The Company shall preserve, in good order, the books of account, relating to the period of not less than 8 (Eight) years or such other period, as may be prescribed, from time to time, under the Act, preceding the current year, together with the vouchers relevant to any entry in such books. Where the Company has a branch office, whether in or outside India, the Company shall be deemed to have complied with this Article, if proper books of account, relating to the transaction effected at the branch office, are kept at the branch office, and the proper summarised returns, made up to day at intervals of not more than 3 (Three) months or such other period, as may be prescribed, from time to time, by the Act, are sent by the branch office to the Company at its Office or other place in India, at which the books of account of the Company are kept as aforesaid. The books of account shall give a true and fair view of the state of affairs of the Company or branch office, as the case may be, and explain the transactions represented by it. The books of account and other books and papers shall be open to inspection by any director, during business hours, on a working day, after a prior notice, in writing, is given to the Accounts or Finance department of the Company.

188	The Board shall, from time to time, determine, whether, and to what extent, and at what times and places, and under what conditions or regulations, the accounts and books of the Company or any of them shall be open to the inspection of members, not being the directors, and no member, not being a director, shall have any right of inspecting any account or books or document of the Company, except as conferred by law or authorised by the Board.
189	The Directors shall, from time to time, in accordance with sections 129 and 134 of the Act, cause to be prepared and to be laid before the Company in Annual General Meeting of the Shareholders of the Company, such Balance Sheets, Profit and Loss Accounts, if any, and the Reports as are required by those Sections of the Act.
190	A copy of every such Profit & Loss Accounts and Balance Sheets, including the Directors' Report, the Auditors' Report and every other document(s) required by law to be annexed or attached to the Balance Sheet, shall at least 21 (Twenty-one) days, before the meeting, at which the same are to be laid before the members, be sent to the members of the Company, to every trustee for the holders of any Debentures issued by the Company, whether such member or trustee is or is not entitled to have notices of general meetings of the Company sent to him, and to all persons other than such member or trustees being persons so entitled.
191	The Auditors, whether statutory, branch or internal, shall be appointed and their rights and duties shall be regulated in accordance with the provisions of the Act and the Rules made thereunder.
	Documents and Notices
192	(i) A document or notice may be served or given by the Company on any member either personally or by sending it, by post or by such other means such as fax, e-mail, if permitted under the Act, to him at his registered address or, if he has no registered address in India, to the address, if any, in India, supplied by him to the Company for serving documents or notices on him. (ii) Where a document or notice is sent by post, service of the document or notice shall be deemed to be effected by properly addressing, pre-paying, wherever required, and posting a letter containing the document or notice, provided that where a member has intimated to the Company, in advance, that documents or notices should be sent to him under a certificate of posting or by registered post, with or without the acknowledgement due, and has deposited with the Company a sum sufficient to defray the expenses of doing so, service of the document or notice shall not be deemed to be effected unless it is sent in the manner and, such service shall be deemed to have been effected, in the case of a notice of a meeting, at the expiration of forty-eight hours after the letter containing the document or notice is posted, and in any other case, at the time at which the letter would be delivered in the ordinary course of post.
193	A document or notice, whether in brief or otherwise, advertised, if thought fit by the Board, in a newspaper circulating in the neighbourhood of the Office shall be deemed to be duly served or sent on the day, on which the advertisement appears, on or to every member who has no registered address in India and has not supplied to the Company an address within India for the serving of documents on or the sending of notices to him.
194	A document or notice may be served or given by the Company on or to the joint holders of a Share by serving or giving the document or notice on or to the joint holder named first in the Register of Members in respect of the Share.
195	A document or notice may be served or given by the Company on or to the person entitled to a Share, including the person nominated in the manner prescribed hereinabove, in consequence of the death or insolvency of a member by sending it through the post as a prepaid letter addressed to them by name or by the title or representatives of the deceased, or assigned of the insolvent or by any like description, at the address, if any, in India, supplied for the purpose by the persons claiming to be entitled, or, until such an address has been so supplied, by serving the document or notice, in any manner in which the same might have been given, if the death or insolvency had not occurred.
196	Documents or notices of every general meeting shall be served or given in some manner hereinafter authorised on or to (i) every member, (ii) every person entitled to a Share in consequence of the death or insolvency of member, (iii) the Auditor or Auditors of the Company, and (iv) the directors of the Company.
197	Every person who, by operation of law, transfer or by other means whatsoever, shall become entitled to any Share, shall be bound by every document or notice in respect of such Share,

	which, previously to his name and address being entered on the Register of Members, shall have duly served on or given to the person from whom he derives his title to such Shares.
198	Any document or notice to be served or given by the Company may be signed by a director or some person duly authorised by the Board for such purpose and the signature thereto may be written, printed or lithographed.
199	All documents or notices to be served or given by members on or to the Company or any Officer thereof shall be served or given by sending it to the Company or Officer at the Office by post, under a certificate of posting or by registered post, or by leaving it at the Office, or by such other means such as fax, e-mail, if permitted under the Act.
	Winding Up
200	The Company may be wound up in accordance with the Act and the Insolvency and Bankruptcy Code, 2016 (to the extent applicable).
	Indemnity and Responsibility
201	Subject to the provisions of the Act, every Director, Secretary and the other officers for the time being of the Company acting in relation to any of the affairs of the Company shall be indemnified out of the assets of the Company from and against all suits, proceedings, cost, charges, losses, damage and expenses which they or any of them shall or may incur or sustain by reason of any act done or committed in or about the execution of their duty in their respective office except such suits, proceedings, cost, charges, losses, damage and expenses, if any that they shall incur or sustain, by or through their own wilful neglect or default respectively.
202	The Company may take and maintain any insurance as the Board may think fit on behalf of its present and/or former Directors and key managerial personnel for indemnifying all or any of them against any liability for any acts in relation to the Company for which they may be liable but have acted honestly or reasonably.
	Secrecy
203	(i) Every director, manager, auditor, treasurer, trustee, member of a committee, officer, servant, agent, accountant or other person employed in the business of the Company shall, if so required by the Directors, before entering upon his duties, sign a declaration pledging himself to observe strict secrecy respecting all transactions and affairs of the Company with the customers and the state of the accounts with the individuals and in matters relating thereto, and shall, by such declaration, pledge himself not to reveal any of the matters which may come to his knowledge in the discharge of his duties except when required so to do by the Directors or by Law or by the person to whom such matters relate and except so far as may be necessary in order to comply with any of the provisions contained in these Articles or the Memorandum of Association of the Company and the provisions of the Act. (ii) Subject to the provisions of the Act, no member shall be entitled to visit or inspect any works of the Company, without the permission of the Directors, or to require inspection of any books of accounts or documents of the Company or discovery of or any information respecting any details of the Company's trading or business or any matter which is or may be in the nature of a trade secret, mystery of trade, secret or patented process or any other matter, which may relate to the conduct of the business of the Company and, which in the opinion of the Directors, it would be inexpedient in the interests of the Company to disclose.
	General Power
204	Wherever in the Act, it has been provided that the Company shall have any right, privilege or authority or that the Company could carry out any transaction only if the Company is so authorized by its articles, then and in that case this Article authorizes and empowers the Company to have such rights, privileges or authorities and to carry such transactions as have been permitted by the Act, without there being any specific Article in that behalf herein provided. At any point of time from the date of adoption of these Articles, if the Articles are or become contrary to the provisions of the SEBI Listing Regulations, the provisions of the SEBI Listing Regulations shall prevail over the Articles to such extent and the Company shall discharge all its obligations as prescribed under the SEBI Listing Regulations, from time to time.

SECTION X: OTHER INFORMATION

MATERIAL CONTRACTS AND DOCUMENTS FOR INSPECTION

The following contracts (not being contracts entered into in the ordinary course of business carried on by our Company or entered into more than two years before the date of the Draft red Herring Prospectus) which are or may be deemed material have been entered or to be entered into by our Company which are or may be deemed material and will be attached to the copy of the Red Herring Prospectus, delivered to the Registrar of Companies, for registration. Copies of the above-mentioned contracts and also the documents for inspection referred to hereunder, may be inspected online with Registrar of Companies and at the Registered Office between 10 a.m. and 5 p.m. on all Working Days from the date of this Red Herring Prospectus until the Bid/ Issue Closing Date. Also, the below-mentioned contracts and also the documents are available for inspection online at website of our Company i.e., www.shreesiddhivinayakgreentech.com.

MATERIAL CONTRACTS

1. Issue Agreement dated July 10, 2026 executed between our Company and the Book Running Lead Manager.
2. Registrar Agreement dated July 02, 2026 executed between our Company and the Registrar to the Issue.
3. Tripartite Agreement dated June 15, 2026 entered into amongst our Company, CDSL, and the Registrar to the Issue.
4. Tripartite Agreement dated June 02, 2026 entered into amongst our Company, NSDL, and the Registrar to the Issue.
5. Syndicate Agreement dated [●] executed between our Company, Book Running Lead Manager and Syndicate Member.
6. Banker to the Issue Agreement dated [●] amongst our Company, the Book Running Lead Manager, Banker to the Issue and the Registrar to the Issue.
7. Underwriting Agreement dated [●] entered into between our Company and the Underwriters.
8. Market Making Agreement dated [●] entered into amongst our Company, the Book Running Lead Manager and the Market Maker.

MATERIAL DOCUMENTS

1. Certified copies of the Memorandum of Association and Articles of Association of our Company, as amended until date;
2. Certificate of Incorporation dated June 25, 2022 issued by the Registrar of Companies, Central Processing Centre;
3. Fresh Certificate of Incorporation dated March 27, 2026 issued by the Registrar of Companies, Central Processing Centre consequent upon conversion to public company;
4. Certificate of Registration of the Special Resolution confirming Alteration of Object Clause(s) dated July 02, 2026 issued by the Registrar of Companies, Central Processing Centre.
5. Board resolution of our Company dated June 25, 2026 authorising the Issue and other related matters;
6. Shareholders resolution dated June 26, 2026 authorising the Issue and other related matters;
7. Board resolution of our Company dated July 10, 2026 taking on record and approving the Draft Red Herring Prospectus;
8. Board resolution of our Company dated [●] taking on record and approving the Red Herring Prospectus;

9. Board resolution of our Company dated [●] taking on record and approving the Prospectus;

10. Copies of the Annual Reports of our Company for the last four Financial Years;

11. Examination report dated June 30, 2026 issued by M/s A N Gawade & Co LLP, Chartered Accountants, the Peer Review Auditor, on the Restated Financial Statements of our Company for Financial Years ended March 31, 2026, March 31, 2025 and March 31, 2024;

12. Restated Financial Statements of our Company read with Examination report dated June 30, 2026 issued by M/s A N Gawade & Co LLP, Chartered Accountants, the Peer Review Auditor for Financial Years ended March 31, 2026, March 31, 2025 and March 31, 2024, vide UDIN No. 26157321ALIYWN1745;

13. Certificate of Statement of Special Tax Benefits available to our Company and its Shareholders dated July 10, 2026, vide UDIN No. 26157321LSPTJS9393 issued by M/s A N Gawade & Co LLP, Chartered Accountants, the Peer Review Auditor of our Company;

14. Audited Financial Statements of our Company along with Independent Auditor's Report dated June 23, 2026 for the Financial Year ended March 31, 2026 issued by M/s A N Gawade & Co LLP, Chartered Accountants, Statutory Auditor of our Company;

15. Certificate dated July 10, 2026, issued by M/s A N Gawade & Co LLP, Chartered Accountants, the Statutory Auditor of our Company, certifying the Key Performance Indicators;

16. Consent letter dated July 10, 2026, issued by Infomerics Analytics & Research Pvt Ltd with respect to the Industry Report dated July 10, 2026;

17. Industry report titled "Processed Food Industry w.r.t Jaggery, Khandsari & Instant Premix" dated July 10, 2026, issued by Infomerics Analytics & Research Pvt Ltd, *The above mentioned Industry report is available on the website of our Company at www.shreesiddhivinayakgreentech.com;*

18. Consents in writing of the (a) Directors, Promoters, Company Secretary & Compliance Officer, Chief Financial Officer, Senior Managerial Personnel, (b) Book Running Lead Manager, Registrar to the Issue, Statutory Auditor cum Peer Review Auditor, Experts, Legal Advisor to the Issue, Banker to the Company, Banker to the Issue*, Underwriter(s) to the Issue*, Market Maker to the Issue* and Syndicate Member*, to include their names in this Draft Red Herring Prospectus to act in their respective capacities;

    **to be obtained prior to filing the Red Herring Prospectus.*

19. Consent letter dated July 10, 2026 issued by M/s A N Gawade & Co LLP, Chartered Accountants to include their names as Statutory Auditor and "Expert" as defined under Section 2(38) of the Companies Act, read with Section 26(5) of the Companies Act, to the extent and in their capacity as a Statutory Auditor;

20. Chartered Engineer's Certificate dated July 08, 2026, containing the consent of Mr. Ajay P. Kothari, Chartered Engineer, having Registration No. M-131709-6, to include his name as an 'Expert' as defined under Section 2(38) of Companies Act, 2013 in respect of said certificate issued by him to our Company;

21. Due Diligence Certificate dated July 10, 2026 along with site visit report(s), addressed to SEBI from the Book Running Lead Manager;

22. In-principle listing approval dated [●] from NSE for listing of the Equity Shares on NSE Emerge platform;

23. Special Resolution passed by the Shareholders of our Company at the Extra Ordinary General Meeting held on May 19, 2026 for the appointment of Mrs. Dipali Dattatraya Kulkarni (DIN: 09021630) as the Managing Director of our Company for a period of 5 years (i.e., from May 19, 2026 to May 18, 2031);

24. Special Resolution passed by the Shareholders of our Company at the Extra Ordinary General Meeting held on May 19, 2026 for the appointment of Mr. Dattatray Kashinath Kulkarni (DIN: 0274916) as the Executive Director cum Chief Financial Officer of our Company for a period of 5 years (i.e., from May 19, 2026 to May 18, 2031);

DECLARATION

I hereby certify and declare that all relevant provisions of the Companies Act, 2013 and the rules, regulations, orders and guidelines issued by the Government of India and the Regulations, orders & guidelines issued by the Securities and Exchange Board of India, established under section 3 of the Securities and Exchange Board of India Act, 1992, as the case may be, have been complied with and no statement made in the Draft Red Herring Prospectus is contrary to the provisions of the Companies Act, 2013, the Securities Contracts (Regulation) Act, 1956, as amended, the Securities and Exchange Board of India Act, 1992, as amended and the rules, regulations, orders and guidelines issued thereunder, as the case may be. I further certify that all statements in the Draft Red Herring Prospectus are true and correct.

Signed by the Director of Shree Siddhivinayak Greentech Industries Limited

Sd/-
Dipali Dattatraya Kulkarni
Managing Director
DIN: 09021630

Place: Dharashiv (formerly Osmanabad)
Date: July 10, 2026

DECLARATION

I hereby certify and declare that all relevant provisions of the Companies Act, 2013 and the rules, regulations, orders and guidelines issued by the Government of India and the Regulations, orders & guidelines issued by the Securities and Exchange Board of India, established under section 3 of the Securities and Exchange Board of India Act, 1992, as the case may be, have been complied with and no statement made in the Draft Red Herring Prospectus is contrary to the provisions of the Companies Act, 2013, the Securities Contracts (Regulation) Act, 1956, as amended, the Securities and Exchange Board of India Act, 1992, as amended and the rules, regulations, orders and guidelines issued thereunder, as the case may be. I further certify that all statements in the Draft Red Herring Prospectus are true and correct

Signed by the Director of Shree Siddhivinayak Greentech Industries Limited

Sd/-
Dattatray Kashinath Kulkarni
Executive Director cum Chief Financial Officer
DIN: 02745916

Place: Dharashiv (formerly Osmanabad)
Date: July 10, 2026

DECLARATION

I hereby certify and declare that all relevant provisions of the Companies Act, 2013 and the rules, regulations, orders and guidelines issued by the Government of India and the Regulations, orders & guidelines issued by the Securities and Exchange Board of India, established under section 3 of the Securities and Exchange Board of India Act, 1992, as the case may be, have been complied with and no statement made in the Draft Red Herring Prospectus is contrary to the provisions of the Companies Act, 2013, the Securities Contracts (Regulation) Act, 1956, as amended, the Securities and Exchange Board of India Act, 1992, as amended and the rules, regulations, orders and guidelines issued thereunder, as the case may be. I further certify that all statements in the Draft Red Herring Prospectus are true and correct

Signed by the Director of Shree Siddhivinayak Greentech Industries Limited

Sd/-
Brijesh Jaynarayan Didvaniya
Independent Director
DIN: 10192519

Place: Dharashiv (formerly Osmanabad)
Date: July 10, 2026

DECLARATION

I hereby certify and declare that all relevant provisions of the Companies Act, 2013 and the rules, regulations, orders and guidelines issued by the Government of India and the Regulations, orders & guidelines issued by the Securities and Exchange Board of India, established under section 3 of the Securities and Exchange Board of India Act, 1992, as the case may be, have been complied with and no statement made in the Draft Red Herring Prospectus is contrary to the provisions of the Companies Act, 2013, the Securities Contracts (Regulation) Act, 1956, as amended, the Securities and Exchange Board of India Act, 1992, as amended and the rules, regulations, orders and guidelines issued thereunder, as the case may be. I further certify that all statements in the Draft Red Herring Prospectus are true and correct

Signed by the Director of Shree Siddhivinayak Greentech Industries Limited

Sd/-
Mahesh Ashok Nannor
Independent Director
DIN: 11685251

Place: Dharashiv (formerly Osmanabad)
Date: July 10, 2026

DECLARATION

I hereby certify and declare that all relevant provisions of the Companies Act, 2013 and the rules, regulations, orders and guidelines issued by the Government of India and the Regulations, orders & guidelines issued by the Securities and Exchange Board of India, established under section 3 of the Securities and Exchange Board of India Act, 1992, as the case may be, have been complied with and no statement made in the Draft Red Herring Prospectus is contrary to the provisions of the Companies Act, 2013, the Securities Contracts (Regulation) Act, 1956, as amended, the Securities and Exchange Board of India Act, 1992, as amended and the rules, regulations, orders and guidelines issued thereunder, as the case may be. I further certify that all statements in the Draft Red Herring Prospectus are true and correct

Signed by the Director of Shree Siddhivinayak Greentech Industries Limited

Sd/-
Sachin Balajirao Ramgirwar
Independent Director
DIN: 11686334

Place: Dharashiv (formerly Osmanabad)
Date: July 10, 2026

DECLARATION

I hereby certify and declare that all relevant provisions of the Companies Act, 2013 and the rules, regulations, orders and guidelines issued by the Government of India and the Regulations, orders & guidelines issued by the Securities and Exchange Board of India, established under section 3 of the Securities and Exchange Board of India Act, 1992, as the case may be, have been complied with and no statement made in the Draft Red Herring Prospectus is contrary to the provisions of the Companies Act, 2013, the Securities Contracts (Regulation) Act, 1956, as amended, the Securities and Exchange Board of India Act, 1992, as amended and the rules, regulations, orders and guidelines issued thereunder, as the case may be. I further certify that all statements in the Draft Red Herring Prospectus are true and correct

Signed by the KMP of Shree Siddhivinayak Greentech Industries Limited

Sd/-
Pearl Santosh Dsouza
Company Secretary & Compliance Officer

Place: Dharashiv (formerly Osmanabad)
Date: July 10, 2026